VARIABLE SPEED DRIVE NEO-WIFI











NEO

PATENTED

motive®

NEOWi-Fi

waterproof
with wireless keypad
easy











motive
www.motive.it







INDEX

Technical specifications pag. 2-3



Examples pag. 4

Working conditons pag. 5



Working conditons pag. 6-7



Motors that can be connected pag. 8

Mechanical assembly pag. 9
Dimensions



Mechanical assembly
Dimensions pag. 10

Motor assembly pag. 11



Mechanical assembly
Keypad assembly pag. 12

BLOCK pag. 13



Electrical assembly
Connection of the external devices pag. 14

pag. 15



Electrical assembly
Connection of the external devices pag. 16

Programming pag. 17
Keypad-inverter communication



Programming
Keypad buttons and led pag. 18

Functions menu pag. 19



Programming
Advanced functions
menu pag. 20-21



Programming alarms pag. 22

Declaration of conformity pag. 23
Event analysis



Terms of sale and guarantee pag. 24



motive®

TECHNICAL SPECIFICATIONS

The purpose of an integrated motor-inverter is to save time and reduce costs in the study, installation, wiring, programming and testing of the motor + inverter system, as well as the dangers due to errors associated with these operations. However, before the NEO-WiFi, there were factors that limited the availability of motor-inverters: the degree of protection that was needed (motors can be installed out in the open, while inverters could not) and the fact that the motor-inverter, and therefore its keypad, remain removed from whoever is commanding it (imagine, for example, a ventilator that is on a roof). Motive has solved both problems with NEO-WiFi, patented, easy to use, IP65, with removable control panel, remotable wireless, powered by induction when placed in its housing on the motor or by lithium rechargeable batteries. While possessing the most advanced features of the other inverters, NEO-WiFi, thanks to its innovative solutions, is designed as a competitive and user-friendly turnkey integrated system, with all parts, motor, inverter and control designed for outdoor use, and with standard remote control. The manufacturers of pumps, fans, and other machines can thus offer a finished "plug-in" product, without delegating risky and costly installations to their customers. Their customers need only to insert the plug, wherever it is installed, and decide if they want to bring the keypad with them.



Programming and control, that is also remote and wireless. A drastic reduction of installation costs.

A keypad can control simultaneously, or separately, up to 8 motors.







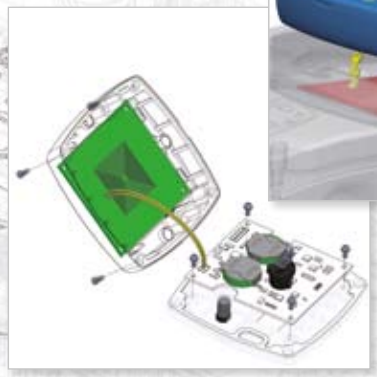

To maintain the degree of protection and eliminate fragile and complicated connectors, the keypad is automatically powered by induction when housed in the lid of the NEO, or, when remote, it is automatically powered by rechargeable batteries that are provided standard, or by BLOCK.



High degree of protection, against dust and water, for outdoor use.



The keypad can be positioned or removed from its seat without any tools, because it adheres to it with 4 magnets.







Rotatable keypad.





The keypad is available in two versions: with or without analogue controls.



Incorporated filters of NEO-Wifi-11 make it suitable for industrial environment EMC. NEO-WiFi-3 EMC is compatible not just with Industrial environment, but also light industrial, commercial and residential environments.

The keypad can be fixed to a metal wall with its magnets or to a concrete wall using inserts.









Any NEO can be fixed to a wide range of motors of different power and size.





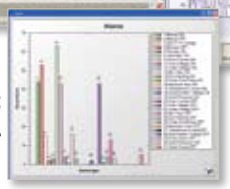

Equipped with PC interface SW for event analysis.

Examples

Adjusting the flow/pressure/force of a pump, a hydraulic power unit, an oil-hydraulic actuator, a compressor, an extraction fan, a ventilator, etc is normally done through shutters or valves. If we have a choke device of this kind, it means we have chosen not to use a variable speed drive (inverter). In this case, the disadvantages are numerous: inability to program ramping up or stopping; nor to synchronize multiple devices; fewer opportunities for interaction with other machines and controls (such as a pressure transducer), less access to controls, more noise, greater peak currents; shorter life of the motor and of the mechanical parts of the system; and above all the absence of energy savings. It is like controlling the speed of a car just by using the brake.

An inverter also simplifies the installation because a system with direct or star-delta type starting often involves the use of suitably oversized power contactors to counter the high electric arcing caused by the overcurrent normally associated with these starting systems. In addition, protection systems for the motor via circuit breakers should always be provided. So: shutter/valve + cabinet + knife switch + motor control relay + motor overload protection automatic switch could be saved with a variable speed drive. Let's add that in certain applications, just the cost of the choke (think for example of the proportional valve of a hydraulic power unit) exceeds that of an inverter.

So why not just use inverters? Essentially for the ease of assembly (assumed) with respect to an electronic device to be wired up and programmed, the reduced size, the degree of protection from dust and liquids and the ease of use, the difficulty of integrating in the system the inverter with its cabinet, the accessibility of the controls. Sometimes also the cost of the inverter can be considerable, especially when it is added to that of a cabinet and cables.

With NEO-WiFi these reasons are no longer valid. There remain only the advantages of the inverter. In fact:

- NEO-WiFi is a motor-inverter and as such cancels the need for cables and cabinets, the study, the installation, the wiring, and the testing of the motor+inverter system, as well as the risks associated with possible errors.
- Not requiring cables and cabinets, and being an integral part of the motor, it does not take up space
- Programming is easier than using the TV remote control
- The keypad of the NEO-WiFi is removable, can operate remotely over wireless and can be placed up to 20 meters away. No wiring, no cables. It does not need wiring because it is supplied by induction when placed in its housing on the motor or in the "BLOCK" device, or fed by rechargeable lithium batteries. Imagine for instance the advantage of installing a ceiling fan with this drive and controlling it from wherever you want without any installation cost
- Even a child knows how to use a device with a red button, a green one, a left-zero-right switch and a control knob
- NEO-WiFi is IP65. Its keypad is IP67



WORKING CONDITONS



Table 1: operating conditions

Physical quantity	Symbol	UOM	NEO-WiFi-3kW	NEO-WiFi-11kW
Inverter protection degree*			IP65	
Inverter supply voltage	V_{1n}	V	3x 200-460	
Inverter supply frequency	f_1	Hz	50-60	
Inverter output frequency	f_2	Hz	200% [f20-100Hz (f150Hz)]	
Rated output current from the inverter (to the motor)	I_{2n}	A	7.0	22
Maximum Starting torque / Rated torque ratio	Cs/Cn	Nm	150%	200% (7,5kW) 160% (11kW)
Maximum Starting current (kept for 3 seconds)	I_{2max}	A	150% I_2	200% I_2 (7,5kW) 160% I_2 (11kW)
Maximum WiFi keypad-inverter communication distance out in the open		mt	20	



III. 3

Further characteristics	NEO-WiFi-3kW	NEO-WiFi-11kW
Motor control	V/F	vectorial
Brushless motors control	NO	optional
Programmer with built-in clock and battery (to make it possible to plan starts and stops);	NO	YES
EMC for industrial environment (EN 61800-3: Cat. C2)	YES	YES
EMC for domestic, commercial and light industrial environment (Cat. C1)	YES	optional
3PH power knife switch	optional	optional
Communication Protocol	NO	Mod-Bus
Internal braking resistances	YES	YES

III. 4



The IP65 degree refers to both the inverter case and to the removable keypad, whether it is placed in the inverter case or whether inverter and keypad are distant from each other. This is possible thanks to:

- adoption of an induction powered system instead of "male-female" connectors,
- shapes of the cases of the 2 items
- special sealing gaskets on the keypad (III. 3) and on the inverter case (III. 4)

NEO-WiFi EMC = Secure operation



Have you ever had a sporadic and inexplicable malfunction of electrical/electronic devices? For example, an automatic gate, a computer, a PLC, a circuit breaker ... If you didn't find the fault, it was probably due to the electromagnetic compatibility of the device (not sufficiently immune to electrical/electromagnetic interference received from the power line or radiated in the air) or to that of other equipment that showed no malfunction but was disturbing your device. Electromagnetic compatibility is a requirement prescribed by law and by the need to guarantee the operation of all electrical/electronic equipment, on the basis of which it must in practice:

- limit below precise thresholds emissions of electrical and electromagnetic interference which can affect the operation of other devices, whether the interference is radiated through the air or conducted in the power line or in the earth return circuits;
- be immune to a series of conducted and radiated interference that may be present in the environment in which it is intended to operate.

It is important therefore not only to protect the operation of the inverter (variable speed drive), but also to protect all the other devices from it. Electromagnetic compatibility is therefore the result of coexistence without reciprocal interference of devices in the same environment.

In an industrial environment, the immunity level must be higher compared to the others, but on the other hand, in a residential, commercial or light industrial environment, it is necessary to limit potential interference emissions more than in the industrial environment.

So the regulations define these two environments:

DOMESTIC, COMMERCIAL AND LIGHT INDUSTRIAL ENVIRONMENT (ref. EN 50081-1, para 5)	INDUSTRIAL ENVIRONMENT (ref. EN 50081-2, para 5)
This concerns residential, commercial and light industrial locations, both internal and external. Locations with a power supply from 50 to 1000V provided direct from the public network are considered residential, commercial or light industrial locations.	Industrial environments are characterized by the existence of one or more of the following conditions: • presence of industrial, scientific or medical equipment • inductive and capacitive loads are frequently switched • currents and associated magnetic fields are high





NEO-WiFi EMC = Secure operation

The part of the first definition that we have underlined contradicts a recurrent belief: in fact, not every location that is often considered an "industrial environment" is only that for the EMC regulations. Indeed, the vast majority of companies also fall within the definition of light industry and their facilities and equipment must therefore satisfy the legal requirements of both environments.
Nevertheless, most of the three-phase inverters circulating on the market are declared in conformity with the regulations which relate only to the industrial environment and, at times, they place limitations even on this.

Having said this, and wanting to talk about the EMC advantages of NEO-WiFi, we cite the two main ones:

1. **maximum distance between inverter and motor**
   In a normal motor/inverter installation it is necessary to minimize the parasitic capacitance of the system and for this (but not with NEO-WiFi), the cables connecting motor and inverter should be short and of shielded type, or unshielded but inserted in a duct or metal tube connected to earth. This also because the cables connecting motor and inverter also radiate radio waves. It is not uncommon for inverter manufacturers, in their declaration of conformity, to specify for the sake of correctness the maximum length of the cable connecting motor and inverter and this statement may be considered valid.
   With an inverter motor this problem does not exist, because motor and inverter are a single unit. If, however, we were unable to control the inverter motor in its position (under a conveyor belt, in the narrow space in which a hydraulic control unit was installed, on an industrial fan attached to a ceiling, etc.), with a normal inverter motor we would still have to have a control device connected via cable to the inverter. This problem does not exist with NEO-WiFi, whose detachable keyboard is connected to the inverter via authorized and tested radio frequencies.

2. **the installation of additional anti-interference filters**
   To make a compatible inverter, the manufacturer will have to allow for additional costs, such as the insertion of components, shielding and filters. To offer a price apparently more attractive, a frequent trick is to not incorporate in the inverter everything you need and to resolve the problem by requiring you in the instruction manual to buy anti-interference filters separately and install them.
   A careless buyer may then fool themselves that they have saved, only to find out later, on reading the manual, that if he/she wants to comply with applicable laws and avoid problems operating the inverter or other devices in the same environment, he/she will have to incur additional costs for materials and installation.
   Another recurrent story is installing inverters suitable only for industrial environments, even if the company has power supplied directly from the mains, putting at risk the operation of other devices. This leaves the problem to the end user to understand why an automatic gate, a computer, a PLC, a protective circuit breaker or other electronic devices in the same environment will begin to have problems of malfunction which will not be confirmed and resolved by the suppliers of the inverter.



NEO-WiFi was designed as a plug-and-play inverter motor, to avoid the costs of additional materials and labour to the buyer. It had to take into account, viewing the situation seriously, the fact of having been designed for its intended environment, without the need for additional material and installation costs.
Very unusually, therefore, in the NEO-WiFi-3 project, Motive has been careful to make it compatible not only with the industrial environment, with high immunity, but also to keep its emissions below the most restrictive thresholds prescribed for the home, commercial and light industrial environment, without the need to install additional external filters.
NEO-WiFi-11, however, because of its greater power, is the standard suitable for installation in industrial environments but requires the installation of an optional external anti-interference filter to make it suitable for the domestic, commercial and light industrial environment too.

MOTORS THAT CAN BE CONNECTED

Tab. RP: Power range of motors that can be connected (at 400Vac)

motor-kW	0.25	0.37	0.55	0.55	0.75	1.1	1.1	1.5	1.9	2.2	3	4	5	5.5	7.5	9,2	11
NEO-WiFi-3kW																	
NEO-WiFi-11kW																SV	SV

SV= applicable power only with forced ventilation



The power that can be applied is dependent not only on the electronic characteristics of NEO-WiFi, but also on the dissipative capacity of its case. It is therefore not allowable to use the electronic board in cases that are different from the original one by removing the electronic board and mounting it in another case.



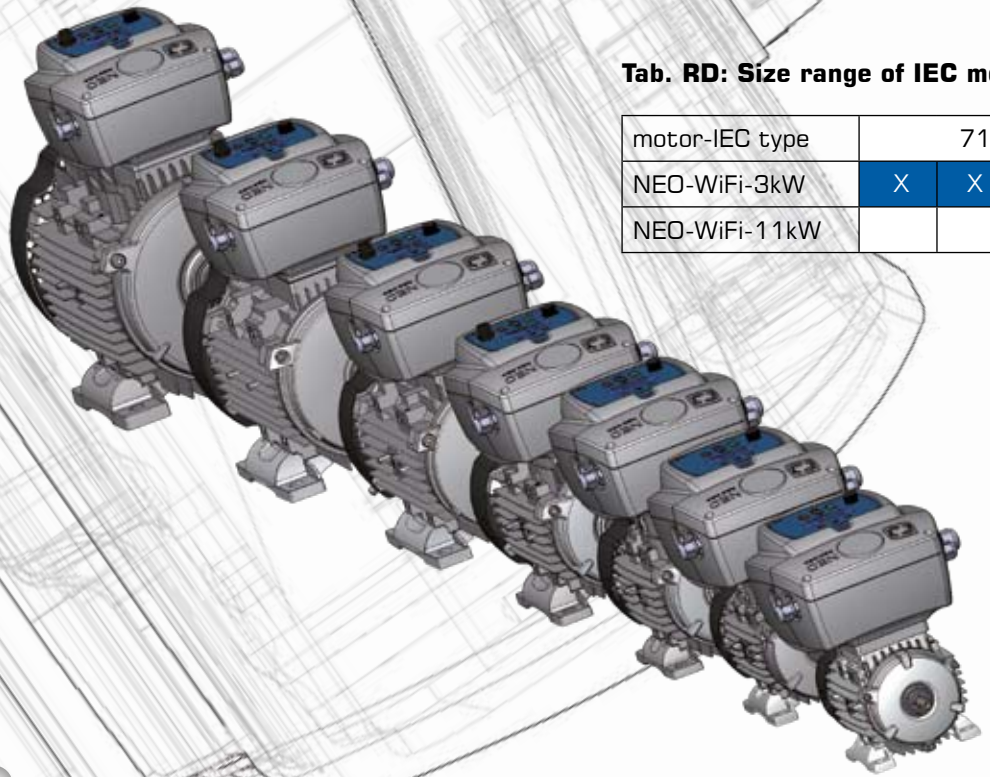

Tab. RD: Size range of IEC motors that can be connected

motor-IEC type	71			80			90			100		112		132		160
NEO-WiFi-3kW	X	X	X	X	X	X	X					X	X	X	X	
NEO-WiFi-11kW							X	X	X	X	X					X

X. required mechanical adapter

It is important that the motor has the requirements to be powered by an inverter. A fundamental requirement is that it has reinforced insulation between the phase windings. The Delphi series motive motors, as a standard feature, can be powered by an inverter.



Dimensions of NEO-WiFi-3kW and keypad

















Dimensions of NEO-WiFi-11kW













Dimensions NEO-WiFi + motor

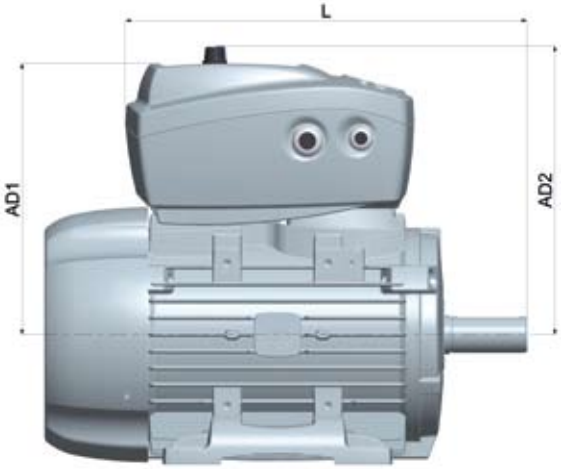

motor IEC	NEO-WiFi-3kW			NEO-WiFi-11kW		
	AD1	AD2	L	AD1	AD2	L
71	195	208	278			
80	211	224	288			
90S	215	228	=	242		431
90L	196	209	=	242		431
100	210	223	=	251		438
112	233	246	=	261		447
132S	252	265	=	274		475
132M	252	265	=	274		=
160				342		=

Motor assembly

If the inverter is used at frequencies lower than 50Hz, it becomes necessary to use motors with forced ventilation:

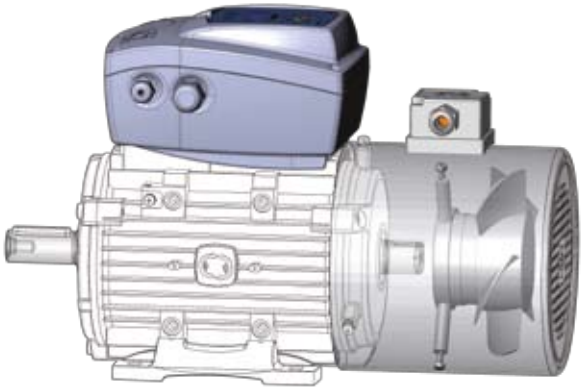

The mechanical fastening with slots (Ill. 5) allows the NEO-WiFi case to be fixed onto a wide range of Delphi series motive motors from size 71 to size 160 (Table. RD)

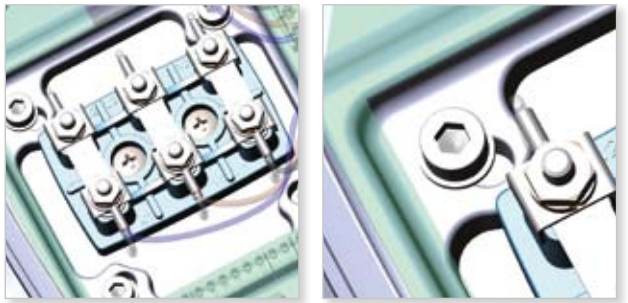

Ill. 5

For the connection between NEO-WiFi and the motors marked with X in the "Tab. RD", specific mechanical adapters are needed. See the following images.

NEO WiFi-3

112-132

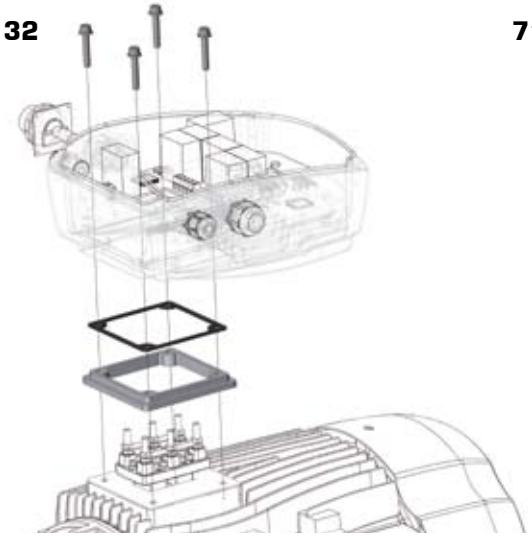

71-80-90S

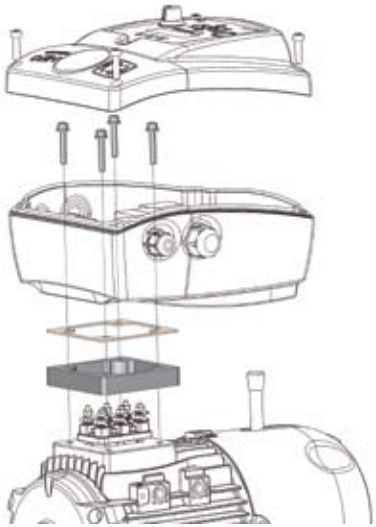

NEO WiFi-11

160M

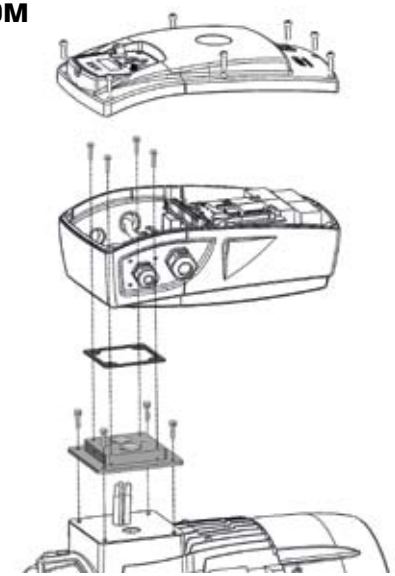

100L

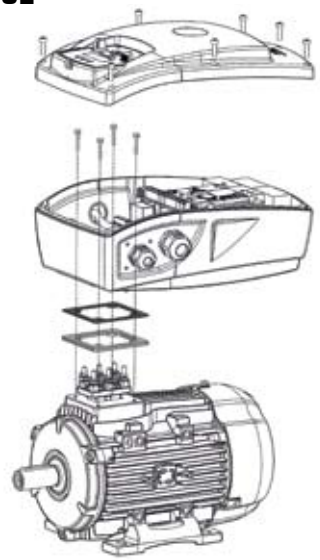

90S / 90L

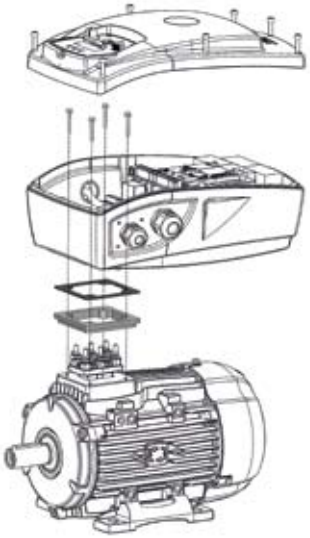

Keypad assembly

The keypad is available in two versions:



Standard version
IP67



Optional version with analog controls
IP65

Thanks to 4 magnets incorporated into the keypad case (Ill. 6), the keypad safely rests in its housing, in any assembly position.

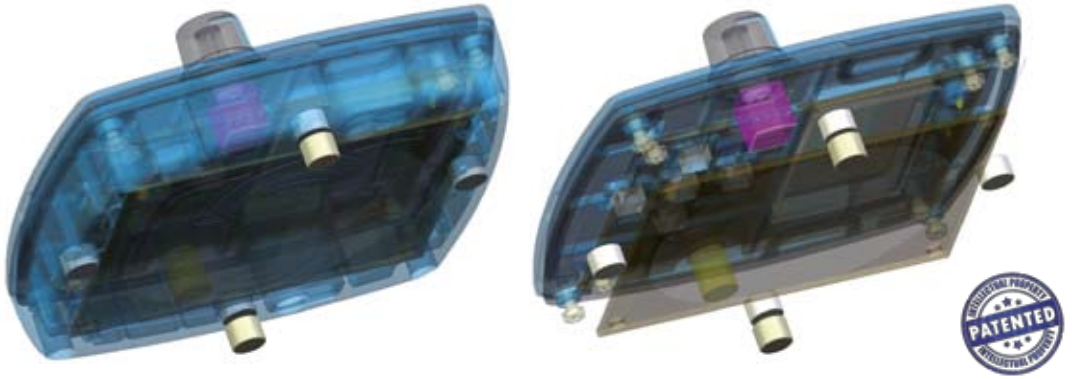

Ill. 6

This also offers the advantage of allowing the keypad to be rotated into 4 positions, depending on the preferred point of view



If the keypad is removed from the NEO-WiFi case, it can be fixed to the wall in 2 ways.

• If the wall is made of metal, by using the magnetism of 4 magnets in the keypad (Ill. 7).





Ill. 7

• Alternatively, it can be fixed onto 2 inserts by using the designated slots on the back of the case (Ill. 8)





Ill. 8

Each keypad comes equipped with two rechargeable batteries.
The rechargeable batteries, if they are regularly charged, can last for several years.

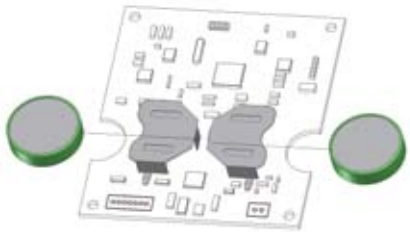

BLOCK – keypad external induction recharger



The keypad is attracted and hold in BLOCK seat by magnets

The keypad can be positioned in any position.

The keypad is powered by induction.

BLOCK is IP65, 200-260Vac 1PH 50/60Hz









If the wall is made of metal, BLOCK is fixed by the magnetism of its 4 magnets.
Alternatively, it can be fixed onto 2 inserts by using the designated slots on the back of BLOCK

Connection of the external devices

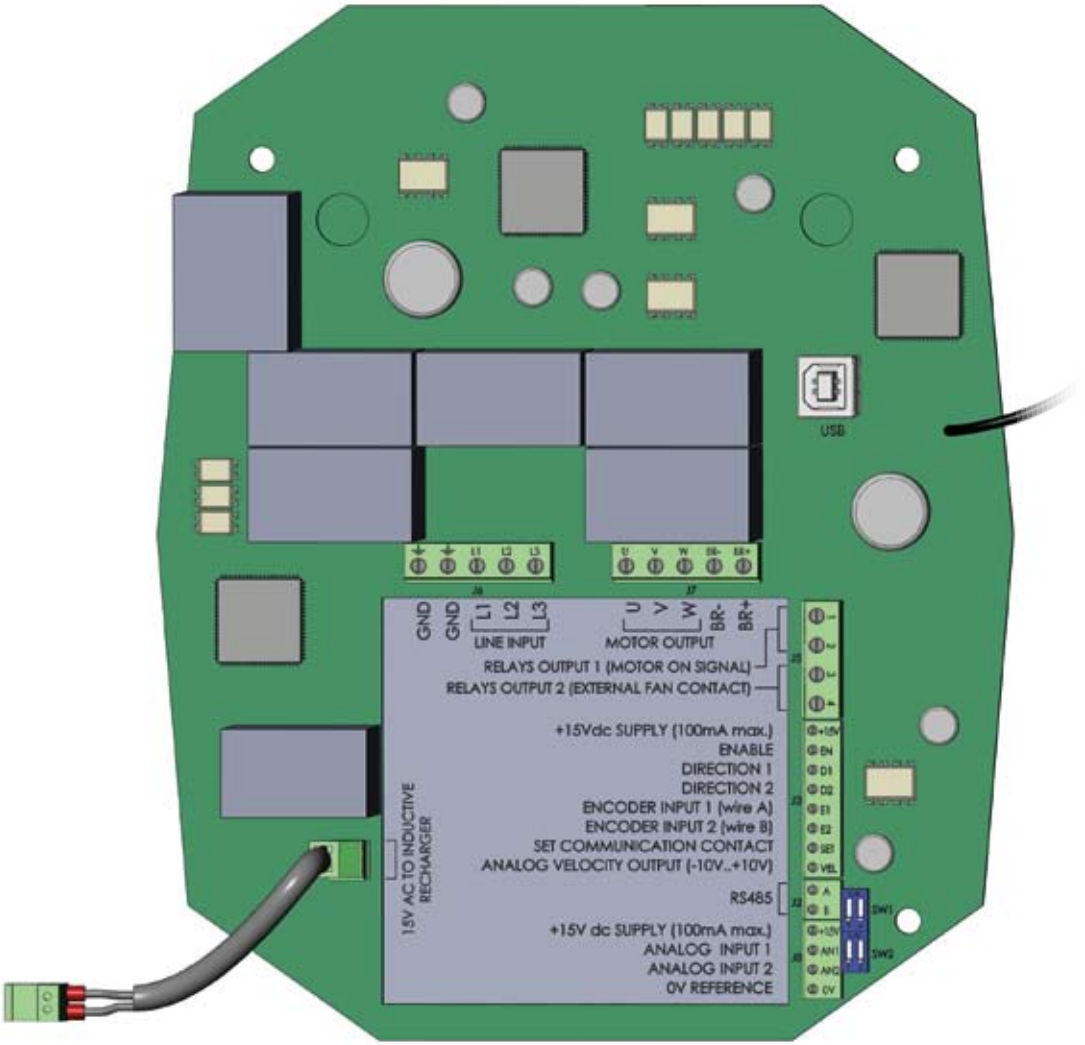

Illustration 13 - Diagram NEO-WiFi-3kW power board

NEO-WiFi-3

	terminal	function
1	J15	normally open contact that closes when the motor starts
2		
3		normally open contact that closes when the IGBT bridge temperature exceeds 55°C
4		
15V	J3	15Vdc output (max 100mA)
EN		enables/disables the inverter operation
D1		direction 1 (rotation sense 1 of motor)
D2		direction 2 (rotation sense 2 of motor)
E1		encoder or proximity sensor input (Channel A)
E2		encoder or proximity sensor input (Channel B)
SET		communication channel selection (closing this contact with 15V)
VEL		analogue output 1 (-10V...+10V)
A	J2	RS485 (for Master-Slave connection)
B		
+15	J8	15Vdc output (max 100mA)
AN1		analogue input 1
AN2		analogue input 2
0V		0Vdc

⏚	J6	grounding
⏚		grounding
L1		phase 1 for inverter power supply from net
L2		phase 2 for inverter power supply from net
L3		phase 3 for inverter power supply from net
U	J7	U phase motor connection
V		V phase motor connection
W		W phase motor connection
BR-		internal braking resistances connection (opt. External), or motor dc brake connection
BR+		

USB		PC connection

SW1		in ON position there's a 4-20mA configuration, in OFF position there's a 0-10V configuration
SW2		

15Vac		15Vac output for induction recharger

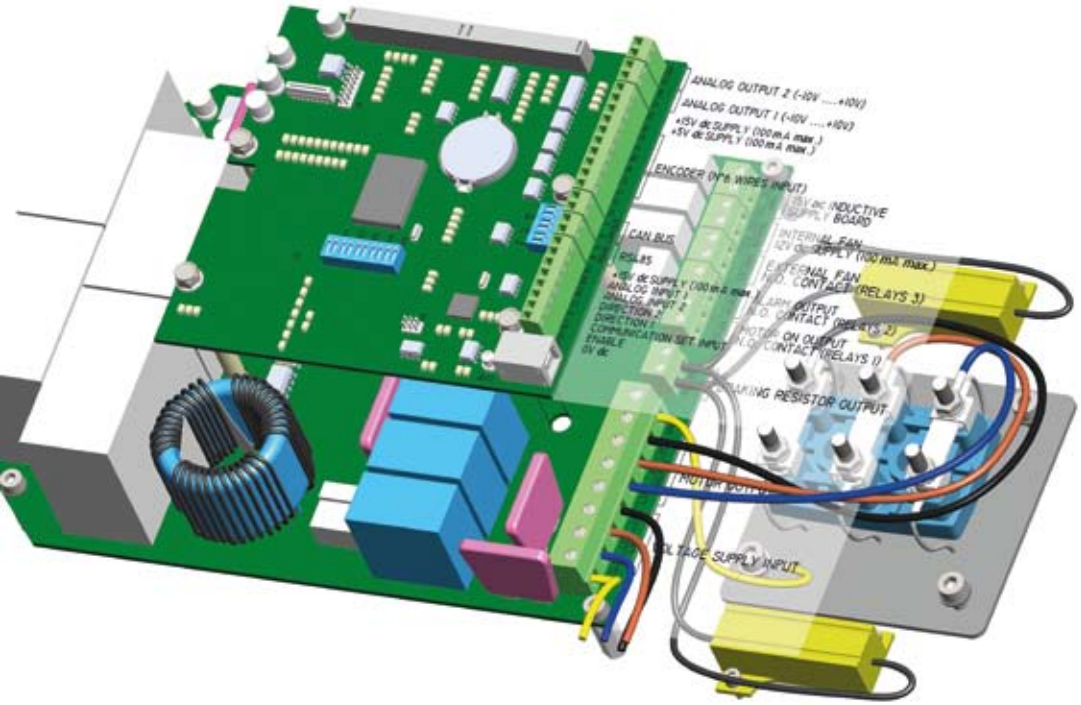

NEO-WiFi-11 (control board)

	terminal	function
AO2	J15	analogue output 0 (0...+10V) for internal IGBT temperature signal (0...100°C)
0V		
AO1	J14	analogue output 1 (-10V...+10V) for motor speed signal (absolute value) and rotation sense (+/- sign)
0V		
15V	J16	15Vdc output (max 100mA)
5V		5Vdc output (max 100mA)
A+	J11	channel A+ input
A-		channel A- input
B+		channel B+ input
B-		channel B- input
Z+		channel Z+ input
Z-		channel Z- input
0V		grounding
0V		grounding
A	J10	Mod Bus communication gate
B		
A	J9	RS485 Bus, (for Master-Slave group connection)
B		
15V	J8	15Vdc output
AN1		analogue input 1 (external signal for speed reference 0-10Vdc)
AN2		analogue input 2 (external potentiometer)
D2		direction 2 (rotation sense 2 motor with external controls)
D1		direction 1 (rotation sense 1 motor with external controls)
SET		communication channel selection (closing this contact with 15V)
EN		enables/disables the motor operation
0V		0Vdc
USB		PC connection

NEO-WiFi-11 (power board)

0V IND	J4	15Vac HF output for induction recharger
AC IND		
0V DC FAN	J1	12V relay output for internal cooling fan (it closes when the IGBT temperature exceeds 50°C)
12V DC FAN		
Ext FAN	J3	normally open contact that closes when the IGBT bridge temperature exceeds 50°C, in order to enable the start of an eventual optional external fan
Ext FAN		
ALARM	J2	normally open contact that closes when there is an alarm, simultaneously shown on the keypad display
ALARM		
MOT ON		normally open contact that closes when the motor starts
MOT ON		
BR+	J10	internal braking resistances connection (opt. External), or motor dc brake connection
BR-		
GND	J9	grounding
U		W phase motor connection
V		V phase motor connection
W		U phase motor connection
L3	J5	phase 1 for inverter power supply from net
L2		phase 2 for inverter power supply from net
L1		phase 3 for inverter power supply from net
GND		grounding

Examples

• To manage the stop and the direction of rotation, it is also possible to connect other auxiliary analogue commands, for example micro switch outputs or PLC.
Example: 3-position switch (Ill. COM1)
If necessary connect an external enabling contact (Fig. COM2, ON enabled with closed contact);

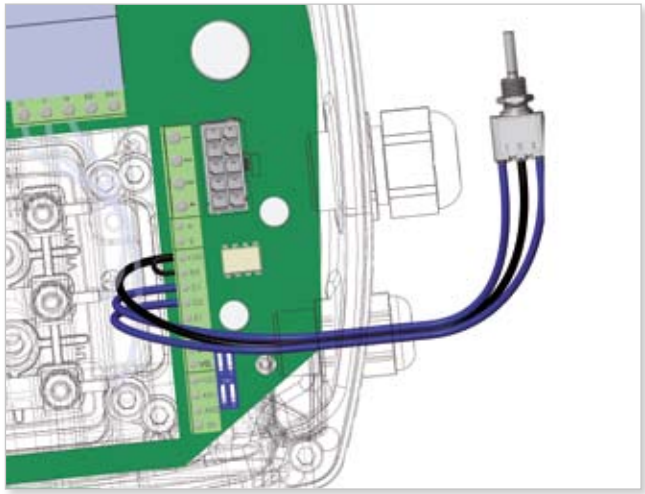

Ill. COM1

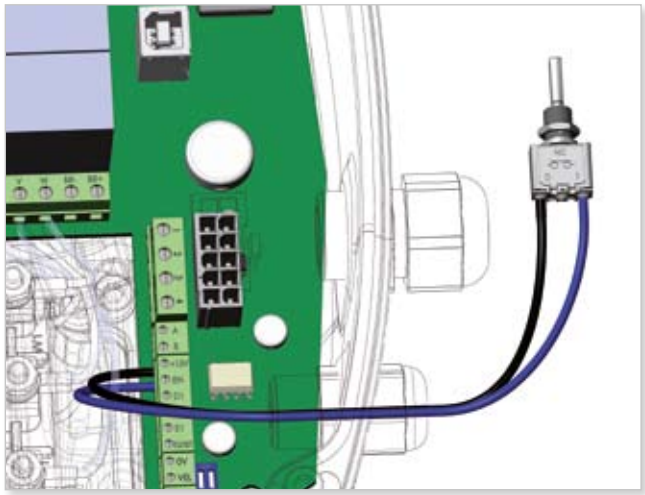

Ill. COM2

• Optional connection: To record and analyse events in the lifetime of the device it is possible to connect to a PC with the USB plug that is on the power board, after installing the software on the PC, provided separately;



See chapter “event analysis”

• Optional connection: there is a analogue output in the standard version with value proportional to the engine speed;

• Optional connection: there are two opto-isolated analog inputs that can be configured in 4-20 mA current with the relative dip-switch couple in the ON position, or in 0-10V voltage with the relative dip-switch couple in the OFF position;

• Optional connection: BRAKE self-braking motor

• Optional connection: ENCODER. Ill. EN.

• Optional connection Proximity Sensor (alternative to the encoder)

• Optional connection: AN2 external potentiometer (go to advanced functions menu).

Ill. EN. NEO-WiFi-3 Encoder connection

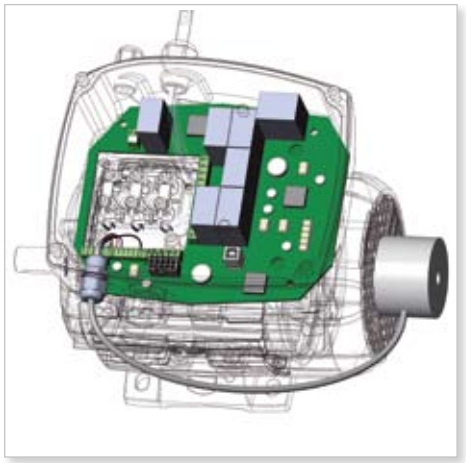

Ill. Motor with standard encoder and with forced ventilation:

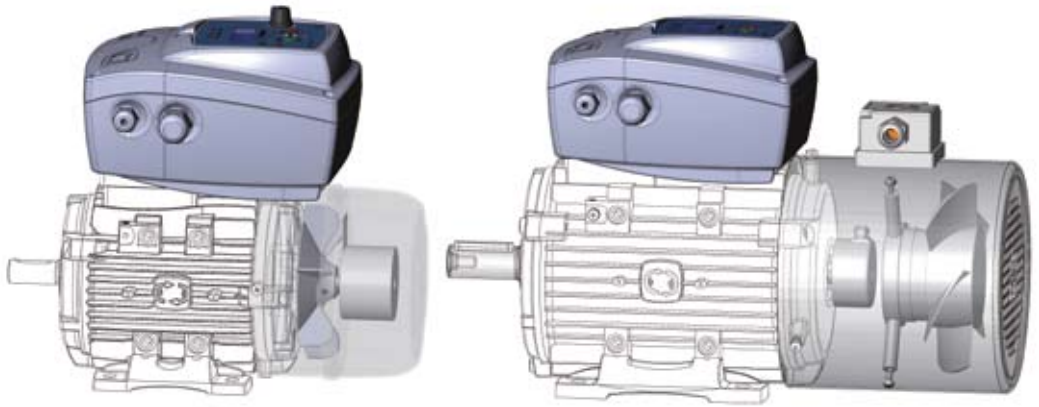

Keypad-inverter communication

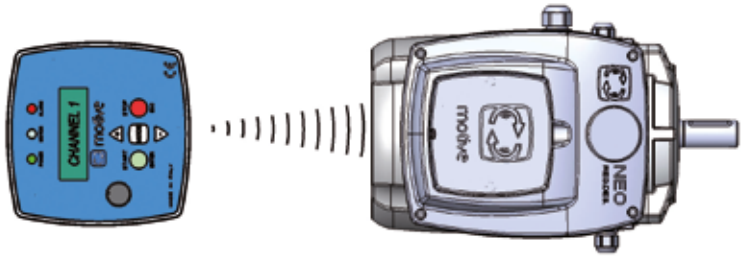

It is instead possible to obtain a synchronous behaviour of 2-8 NEO-WiFi with one keypad, connected them in master-slave mode. Slaves can function also without keypad, once they have been configured in the RS485 connection



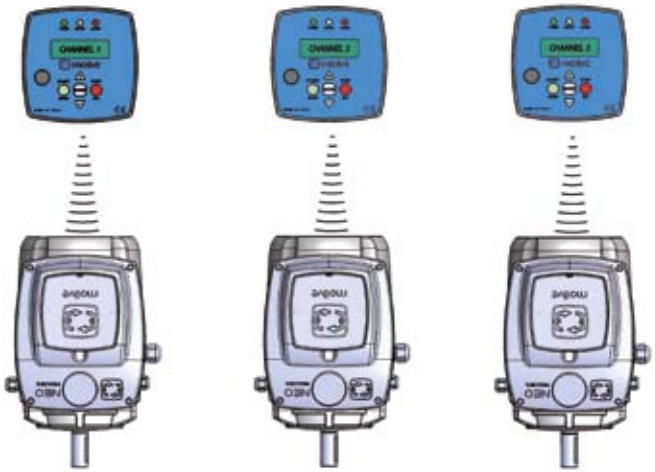

Separate control of multiple motors with multiple keypads with separate channels from 1 to 127

The keypad during the functioning of the motor shows, alternating them, the following two sets of data

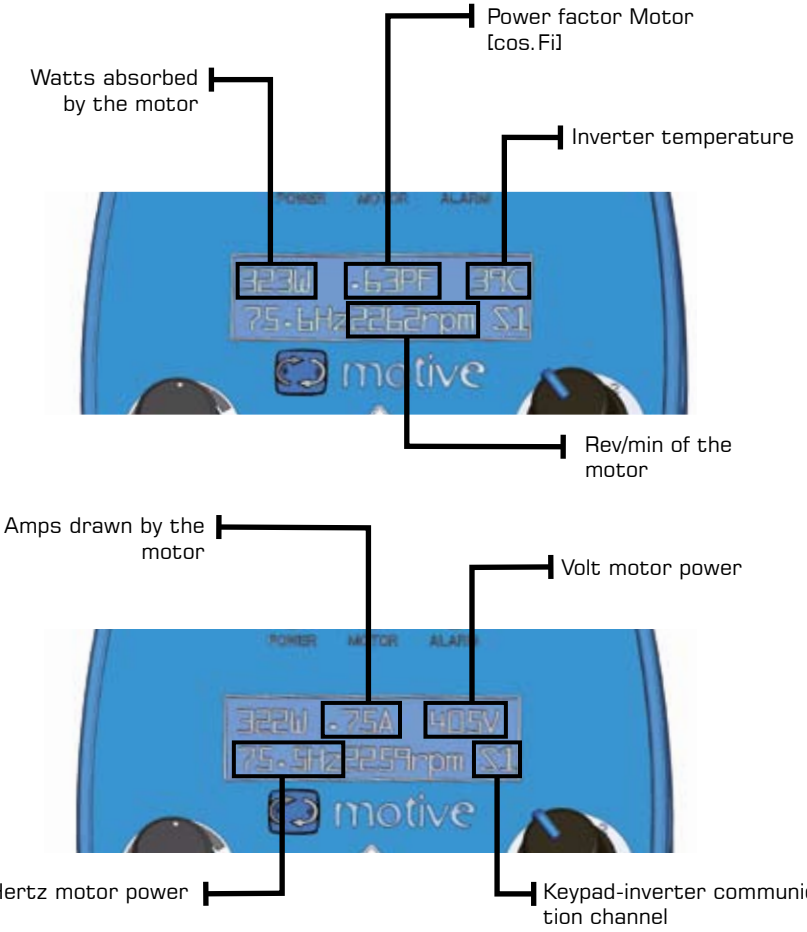

Since keypad version V1.12 (you can see it for 2 seconds when you switch the keypad on) it is possible to see the battery charge.

For that, keep MODE pressed for a while (16 squares = fully charged).



keypad buttons



led keypad



The buttons on the control keypad are as follows:

Button	Description
MODE	To enter the function menu
START / ENTER	To start the motor / to access the sub-menu or to enter the function and change its values
+	Allows you to scrolls up through the menu items or change in positive the values of the variables; at the end of the change press ENTER.
−	Allows you to scroll down through the menu items or change in negative the values of the variables; at the end of the change press ENTER.
STOP / ESC	To stop the motor / to exit from the sub-menu (by entering the main menu); to exit from the main menu enabling the motor controls

Table 3: Buttons

Led	Description
Power ON	Green - signals the presence of mains voltage on the feed
Motor ON	Green - Motor functioning
Alarm	Red - signals an anomaly (see list of Alarms) when turned on

Table 4: Led description

functions menu

Menu	Sub-menu	Description
Language		Italian / English
Communication	1. Machine Code 2. Radio frequency	1. from 1 to 127 2. 860..879 MHz
Motor data	1. Rated power P2 [kW] 2. Rated voltage [V] 3. Rated current [A] 4. Rated frequency [Hz] 5. Rated RPM; 6. cosϕ 7. Maximum torque slide	1. from 0.25 to 3.0 2. from 200 to 440V 3. from 1 to 7A for NEO-WiFi 4. from 50 to 100 5. from 700 to 3550 6. from 0.60 to 0.90 7. from 10 to 50%
Advanced Functions	Access to the advanced functions menu	To access enter numeric access Password (number pre-assigned by Motive: (it is possible to modify into numbers 1 to 999)
Data save/Reset	• Yes: the changes made are saved • No: returns to the values preceding the changes • Factory data: resets the calibration factory values	Save the changed data, or restore the default values NOTE: auto-saves every time you exit the from function menu.

Table 5: Main menu

NOTE: To enter the motor data refer to the data on the plate of the motor.

Advanced functions menu:

Advanced Functions Menu	Sub-menus	Description
Motor limitations	1. Internal speed [RPM] 2. Rotation [0, 1]; 3. Maximum speed [%] 4. Minimum speed [%] 5. Acceleration [s] 6. Deceleration [rpm/s] 7. Maximum inrush current [%] 8. Braking Joules	1. From 1 to 6000 RPM (default, ≈ 280rpm) 2. 0=clockwise, 1=counter-clockwise; 3. from 5 to 200% 4. from 2 to 200% 5. from 0.5 to 25.0 6. from 0.5 to 25.0 7. from 80 to 150 8. from 100 to 9999 [Joule]; default 300, increase if external resistances are used
Type of command	1. Enables restart 2. Restart time after alarm [s] 3. Start/Stop Commands 4. Speed Signal 5. Feedback 6. N. pulses/revolution whole part 7. N. pulses/revolution decimal part 8. RS485 Master Slave 9. T/R fault stop (ON/OFF) (this function is there only from keypad version V.201 and NEO-WiFi-3 version V.2.01)	1. Enables the restart after a crash caused by lack of mains voltage or alarm 2. Waiting time before the reboot, follows a stop caused by an alarm condition; 3. • From keypad • from keypad with selector • remote 4. • Internal speed • keypad potentiometer • AN2 external potentiometer • signal 0-10V AN1; 5. • Open ring • Encoder; 6. Whole part of the number of pulses/revolution with encoder (e.g. 256); 7. Decimal part of the number of pulses/revolution with encoder (e.g. 0); 8. Motor number / Total n. of motors in group 9. When this function is ON, it switches off the motori f the T/R radio communication between keypad and NEO is missing.

Advanced functions menu:

Advanced Functions Menu	Sub-menus	Description
Electromagnetic brake	1. Electromagnetic braking: ON/OFF 2. Feed of the brake coil	Enabling this function, the electromagnetic brake is energized when the motor starts and is de-energized at the end of the deceleration ramp of the motor. 1. Brake enabling, 2. Supply voltage of the brake coil, selectable between two values: 104Vdc or 180Vdc
P.I.D. factors	1. Proportional factor 2. Integral factor	For speed control in feedback via encoder or proximity switch 1. $K_{proportional}$: 1-100. Multiplies the error of the reference quantity 2. $K_{integral}$: 1-100. Multiplies the integral of the error
Clock setting (function based on the battery clock, which is there only on NEO-11 and NEO-22; not there on NEO-3)	Date and hour setting: to unlock the clock, modify the SECONDS value.	Year: XX Month: XX Day: XX Hour: XX Minute: XX Second: XX
Starts Timer (function based on the battery clock, which is there only on NEO-11 and NEO-22; not there on NEO-3)	Timer ON/OFF	When the Timer is ON, you can set up to 5 programs (consecutive starts/stops) insde 24 hours, which will be repeated every day. Every day of the week will be the same, and you cannot set different programs for different week days.: • P1: XX (Start HOUR 1), YY (Start MIN 1); A1: ZZ (Stop HOUR 1); WW (Stop MIN 1); • P2: XX (Start HOUR 2), YY (Start MIN 2); A1: ZZ (Stop HOUR 2); WW (Stop MIN 2); • P3: XX (Start HOUR 3), YY (Start MIN 3); A1: ZZ (Stop HOUR 3); WW (Stop MIN 3); • P4: XX (Start HOUR 4), YY (Start MIN 4); A1: ZZ (Stop HOUR 4); WW (Stop MIN 4); • P5: XX (Start HOUR 5), YY (Start MIN 5); A1: ZZ (Stop HOUR 5); WW (Stop MIN 5).
Alarm history	List of alarms recorded	View in chronological order (from first to last) all the last 99 Alarm events recorded during the life of the inverter. The same data is saved in the memory and is made available for analysis from the PC by means of a USB connection for the technical support and repair service (ATTENTION: only with inverter not powered).

Table 6: Advanced functions menu

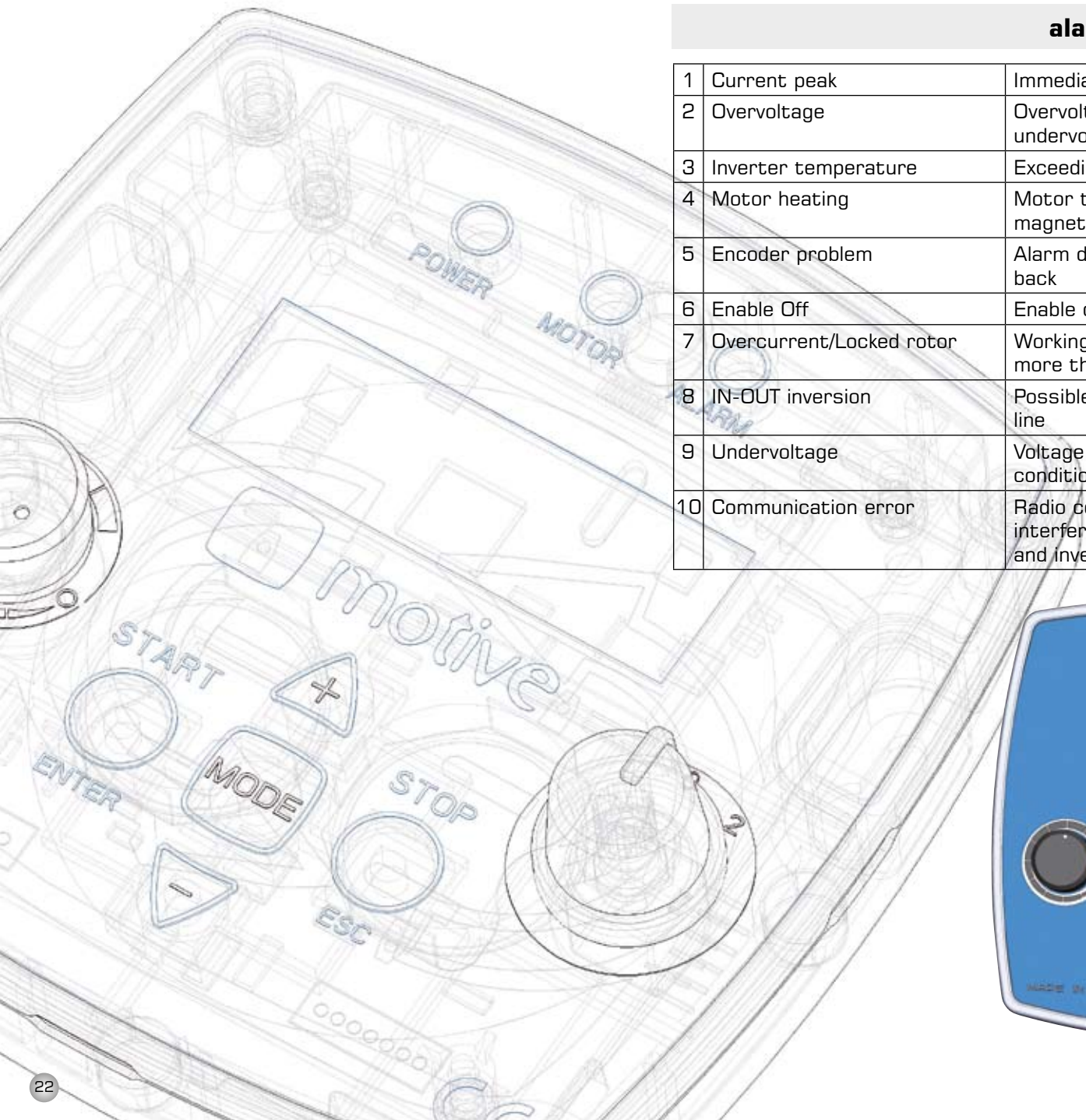

alarms (from V1.10):

1	Current peak	Immediate intervention for short circuit
2	Overvoltage	Overvoltage due to the generator functioning during deceleration or undervoltage
3	Inverter temperature	Exceeding the temperature limit on the electronic board (86°C)
4	Motor heating	Motor thermal protection (it works on the same principle of thermal magnetic circuit breakers: the current)
5	Encoder problem	Alarm due to a problem with the encoder with speed control in feed-back
6	Enable Off	Enable contact between EN and C open
7	Overcurrent/Locked rotor	Working only with speed control feedback via encoder, if locked for more than 10 seconds
8	IN-OUT inversion	Possible inversion error of the input and output cables of motor and line
9	Undervoltage	Voltage value insufficient to keep the engine running at a given load condition
10	Communication error	Radio communication error between keypad and inverter – possible interference on the transmitted signal or incompatibility of keypad and inverter software versions.



DECLARATION OF CONFORMITY

Motive s.r.l.
Via Le Ghiselle, 20
25014 Castenedolo (BS)
Tel.: +39 030 2677087
Fax: +39 030 2677125
motive@e-motive.it
www.motive.it

Declaration of conformity

Motive srl with seat in Castenedolo (BS) - Italy

declares, under its exclusive responsibility, that its range of "NEO-WiFi" inverters and motor-inverters

is constructed in accordance with the following international regulations (latest edition)

- **EN60034-1**. Rotating electrical machines: rating and performance
- **EN60034-5**. Rotating machines: definition of degrees of protection
- **EN 60034-6**. Rotating machines: methods of cooling
- **EN60034-7**. Rotating electrical machines - Part 7: Classification of types of construction, mounting arrangements and terminal box position
- **EN60034-8**. Terminal markings and direction of rotation for rotating electrical machines
- **EN60034-30**. Rotating electrical machines: efficiency classes of single-speed, three-phase, cage-induction motors
- **EN50347**. General purpose three-phase induction motors having standard dimensions and outputs - Frame numbers 56 to 315 and flange numbers 65 to 740
- **EN60335-1**. Safety of household and similar electrical appliances
- **EN 60335-2-41**. Safety of household and similar electrical appliances - Part 2 Particular requirements for pumps
- **EN 55014-2**, Electromagnetic compatibility. Requirements for household appliances, electric tools and similar apparatus. Part 2: Immunity
- **EN 61000-3-2**, Limits for harmonic current emissions (equipment input current <= 16 A per phase).
- **EN 61000-3-3**. Limitation of voltage fluctuations and flicker in low-voltage supply systems, for equipment with rated current <= 16 A
- **EN 61000-3-12**. Limits for harmonic currents produced by equipment connected to public low-voltage systems with rated input current greater than 16 A and <= 75 A per phase
- **EN61000-6-4**. Electromagnetic compatibility (EMC): Part 6-4: Generic standards - Emission standard for industrial environments
- **EN 50178**. Electronic equipment for use in power installations
- **ETSI 301 489-3** Electromagnetic compatibility standard for radio equipment. Part 3: Specific conditions for Short-Range Devices (SRD) operating on frequencies between 9 kHz and 40 GHz.

	NEO-WiFi-3kW	NEO-WiFi-11kW
EMC for DOMESTIC, COMMERCIAL AND LIGHT INDUSTRIAL ENVIRONMENT (ref. EN 50081-1, para 5)	YES (since V2.01)	optional
EMC for INDUSTRIAL ENVIRONMENT (ref. EN 50081-2, para 5)	YES	YES

as required by the Directives

- Low Voltage Directive (LVD) 2006/95/EC
- Electromagnetic Compatibility Directive (EMC) 2004/108 EEC
- Ecodesign Directive for energy related products EEC 2009/125

NB: the Machinery Directive (MD) 2006/42/EC expressly excludes from its scope electric motors (Art. 1, paragraph 2)

Castenedolo, 1 January 2013
The Legal Representative

EVENT ANALYSIS

This software is a tool dedicated exclusively to authorized Motive service centers.
It is meant for the verification of possible anomalies or failures. In fact:

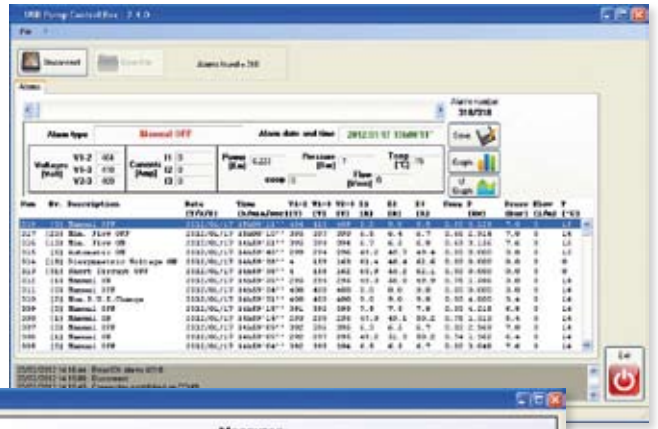

• it acts as a black box for the diagnosis and analysis of problems of specific applications with the inverter. Ability to store over 8000 events that occurred over time.

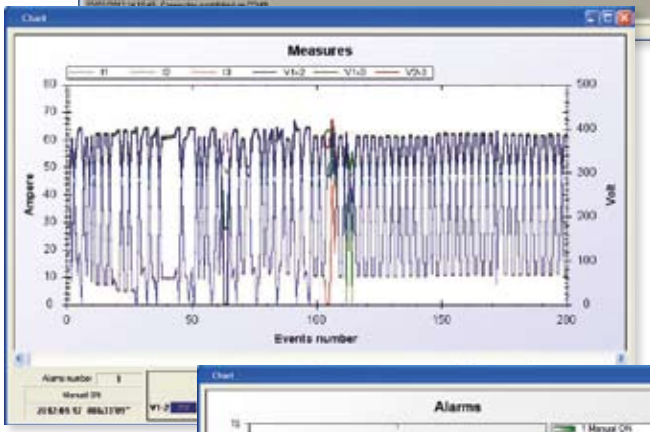

• displays all the electrical quantities during the alarm events that occurred while the product is functioning.

• Counts the working hours with inverter turned on and the motor running

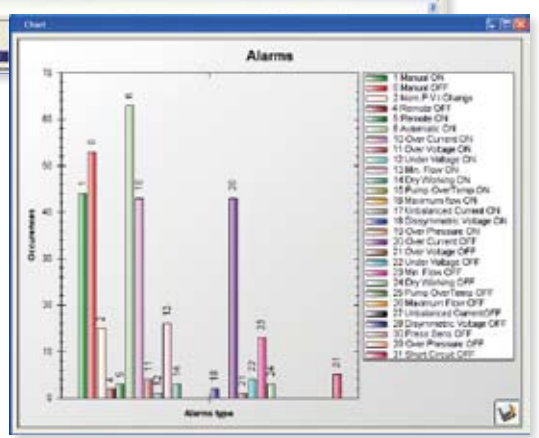

• Shows time graphs of electrical quantities, voltages and currents

• Displays the histogram of events that occurred over time, being able to assess the greater or lesser recurrence of some of these events.

The screens shown above are purely indicative.
For details on this SW, see the specific manual.

TERMS OF SALE AND GUARANTEE

ARTICLE 1
GUARANTEE

1.1 Barring written agreements, entered into between the parties hereto each time, Motive hereby guarantees compliance with specific agreements.
The guarantee for defects shall be restricted to product defects following design, materials or manufacturing defects leading back to Motive.
The guarantee shall not include:
* Faults or damages ensuing from transport. Faults or damages ensuing from installation defects; incompetent use of the product, or any other unsuitable use.
* Tampering or damages ensuing from use by non-authorised staff and/or use of non-original parts and/or spare parts;
* Defects and/or damages ensuing from chemical agents and/or atmospheric phenomena (e.g. burnt out material, etc.); routine maintenance and required action or checks;
* Products lacking a plate or having a tempered plate.

1.2 Returns to credit or replace will be accepted only in exceptional cases; however returns of goods already used to credit or replace won't be accepted in any case.
The guarantee shall be effective for all Motive products, with a term of validity of 12 months, starting from the date of shipment.
The guarantee shall be subject to specific written request for Motive to take action, according to statements, as described at the paragraphs herein below. By virtue of aforesaid approval, and as regards the claim, Motive shall be bound at its discretion, and within a reasonable time-limit, to alternatively take the following actions:
a) To supply the Buyer with products of the same type and quality as those having proven defective and not complying with agreements, free ex-works; in aforesaid case, Motive shall have the right to request, at Buyer's charge, early return of defective goods, which shall become Motive's property;
b) To repair, at its charge , the defective product or to modify the product which does not comply with agreements, by performing aforesaid action at its facilities; in aforesaid cases, all costs regarding product transport shall be sustained by the Buyer.
c) To send spare parts free of charge: all costs regarding product transport shall be sustained by the Buyer.

1.3. The guarantee herein shall assimilate and replace legal guarantees for defects and discrepancies, and shall exclude any other eventual Motive liability, however caused by supplied products; in particular, the Buyer shall have no right to submit any further claims.
Motive shall not be liable for the enforcement of any further claims, as of the date the guarantee's term of validity expires.

ARTICLE 2
CLAIMS

2.1. Claims, regarding quantity, weight, gross weight and colour, or claims regarding faults and defects in quality or compliance, and which the Buyer may discover on goods delivery, shall be submitted by a max. 7 days of aforesaid discovery, under penalty of nullity.

ARTICLE 3
DELIVERY

3.1. Any liability for damages ensuing from total or partial delayed or failed delivery, shall be excluded.

3.2. Unless differently communicated by written to the Client, the transport terms have to be intended ex-works.

ARTICLE 4
PAYMENT

4.1. Any delayed or irregular payments shall entitle Motive to cancel ongoing agreement, including agreements which do not regard the payments at issue, as well as entitling Motive to claim damages, if any. Motive shall, however, have the right, as of payment's due date and without placing in arrears, to claim interest for arrears, to the extent of the discount rate in force in Italy, increased by 12 points. Motive shall also have the right to withhold material under repair for replacement. In the case of failed payment, Motive shall have the right to cancel all guarantees of materials, as regards the insolvent Client.

4.2. The Buyer shall be bound to complete payment, including cases whereby claims or disputes are underway.

DOWNLOAD THE TECHNICAL MANUAL FROM WWW.MOTIVE.IT

ALL DATA HAVE BEEN WRITTEN AND CHECKED WITH THE GREATEST CARE.
WE DO NOT TAKE ANY RESPONSIBILITY FOR POSSIBLE ERRORS OR OMISSIONS.
MOTIVE CAN CHANGE THE CHARACTERISTIC OF THE SOLD ITEMS ON HIS FIRM OPINION AND IN EVERY MOMENT.



CERTIFICATO

Nr 50 100 1185 - Rev. 07

Si attesta che / This is to certify that

IL SISTEMA QUALITÀ DI
THE QUALITY SYSTEM OF:

motive

MOTIVE S.r.l.

SEDE LEGALE E OPERATIVA:
REGISTERED OFFICE AND OPERATIONAL SITE:

VIA LE GHISELLE 20
I-25014 CASTENEDOLO (BS)

È CONFORME AI REQUISITI DELLA NORMA
HAS BEEN FOUND TO COMPLY WITH THE REQUIREMENTS OF

UNI EN ISO 9001:2008

QUESTO CERTIFICATO È VALIDO PER IL SEGUENTE CAMPO DI APPLICAZIONE
THIS CERTIFICATE IS VALID FOR THE FOLLOWING SCOPE

Progettazione e fabbricazione di motori elettrici, riduttori meccanici e inverter per la trasmissione di potenza (IAF 19, 18)

Design and manufacture of electrical motors, mechanical reducers and inverter for power transmissions (IAF 19, 18)

ACCREDIA

Per l'Organismo di Certificazione
For the Certification Body
TÜV Italia S.r.l.

Paolo Merenda

Validità / Validity
Dal / From: 2013-03-02
Al / To: 2016-03-02

Data emissione / Presting Date
2013-05-06

PRIMA CERTIFICAZIONE / FIRST CERTIFICATION: 2001-07-20

"LA VALIDITÀ DEL PRESENTE CERTIFICATO È SUBORDINATA A SORVEGLIANZE PERIODICHE A 12 MESI E AL RIESAME COMPLETO DEL SISTEMA DI GESTIONE AZIENDALE CON PERIODICITÀ TRIENNALE."

"THE VALIDITY OF THE PRESENT CERTIFICATE IS DEPENDED ON THE ANNUAL SURVEILLANCE EVERY 12 MONTHS AND ON THE COMPLETE REVIEW OF COMPANY'S MANAGEMENT SYSTEM AFTER THREE YEARS"

TÜV Italia S.r.l. • Gruppo TÜV SÜD • Via Carducci 125, Pal. 23 • 20099 Sesto San Giovanni (MI) • Italia • www.tuv.it

ZERTIFIKAT ◆ CERTIFICATE ◆ СЕРТИФИКАТ ◆ CERTIFICADO ◆ CERTIFICAT

VISIT AND KNOW MOTIVE THANKS TO THE MOVIE ON WWW.MOTIVE.IT



ASK OUR FURTHER CATALOGUES:





NEO-WiFi TECHNICAL CATALOGUE ENG AGO 13 REV.02

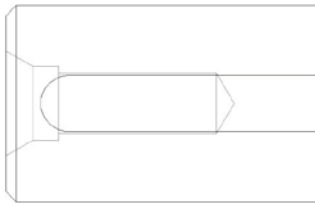

AREA DISTRIBUTOR

Motive s.r.l.
Via Le Ghiselle, 20
25014 Castenedolo (BS) - Italy
Tel.: +39.030.2677087 - Fax: +39.030.2677125
web site: www.motive.it
e-mail: motive@e-motive.it