

UNI EN ISO 9001 : 2000

CERTIFIED COMPANY

GENERAL INDEX

PART 1

Cylinders and their accessories

Cylinders to standard



ISO 6432	
MS - MSM	1.2.1
MD-MDM-MDMA	1.2.10
ISO 6431 and VDMA 24562	
AMA-AMT (32÷125)	1.5.1
AMT (160÷320)	1.8.1
CNOMO 06.07.00	
CX	1.14.1
UNITOP	
CS	1.17.1
CD-CDN	1.17.10

Cylinders not to standard



Round	
RED - REDM	1.11.1
Short stroke	
BS - BSM	1.20.1
BD - BDM - BDMN	1.20.10
Compact guided	
GEDB - GEDS	1.23.1
Cartridge	
MCN - MCF	1.55.1

Rodless cylinders



S1 - S2	1.26.1
S3 - S5 - S6	1.26.10
S4	1.26.20

Rotary actuators



Rotary cylinders rack / pignon	
CR - CFR - CRR - CRRF	1.40.1
Hi-rotors	
P - P1 - PR - P1R	1.50.1
Rotary actuators double rack	
ARC	1.50.20
Rotary actuators with pignon and external mechanical stopper	
ARP	1.50.30

Cylinders accessories



Slide units	
UGLB - UGPB - UGPS (12÷25)	1.70.1
UGLB - UGPB - UGPS (32÷100)	1.70.20
SCSG	1.70.40
Blocking piston rod units	
ABS...CRD - ABS...ARD (20÷25)	1.75.1
ABS...CRD - ABS...ARD (32÷125)	1.75.10
Shock decelerators	
DR - DRF	1.105.1
Sensors and brackets	
ASV...	1.110.1
ASC...	1.110.2
CAV...	1.110.3
AFM - AFR - AS1	1.120.1

Hand grips



PAB	1.80.1
PAC	1.80.11
PPB	1.80.20
PPC	1.80.30
PPD	1.80.40
PPE	1.80.50

Mounting accessories



ISO 6432 mountings	
CF - P - F	1.95.1
ISO 6431 mountings (aluminium)	
CF - CM - CFS - ASV - P - CMS -AS	1.97.1
ISO 6431 mountings (steel)	
CF - CM - ASV - SEC - CFS - CMS - ASS - FL - FLV PB - CT - CTS - OST - CFA - CTA	1.98.1
CNOMO mountings (aluminium)	
CF - AN - AS - P - PL	1.99.1
CNOMO mountings (steel)	
FL - PB - SEC - CT - CTS	1.99.50
UNITOP mountings (aluminium)	
CM - CF - FL	1.100.1
UNITOP mountings (steel)	
CM - CF - FL - PB	1.100.50
Round cylinders mountings	
CF - GH	1.11.3
P - SEC	1.11.4
Short stroke cylinders mountings	
CM - N	1.20.20
P	1.20.21
Rodless cylinders mountings	
P - SI	1.26.28
CL - C	1.26.30
Hi-rotors mountings	
FP - PP	1.50.10
Hand grips mountings	
PM - FP	1.80.60
Piston rod accessories Clevis	
FF ISO 8140	1.85.1
FF DIN 71752	1.85.5
FF CNOMO 06.07.14	1.85.10
FE MASCHIO	1.85.20
Piston rod accessories Rod ends	
RF - RM ISO8139	1.90.1
GB	1.90.10
RBI	1.90.20
RBL	1.90.30
Mounting screws	
VBIC- VBVI - VBU - VBTR	1.101.1

GENERAL INDEX START PAGE

PART 2

Valves

Control valves to standard

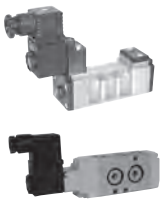

ISO 5599/1	
ISO 1 solenoid	
ISO1E - ISO1K	2.110.1
ISO1EL - ISO1KL	2.111.1
ISO 1 pneumatic	
ISO1P	2.113.1
ISO 1 sub-bases	
SBA1	2.120.1
ISO 2 solenoid	
ISO2E - ISO2K	2.130.1
Pneumatic ISO 2	
ISO2P	2.133.1
ISO 2 sub-bases	
SBA2	2.137.1
NAMUR	
A1N	2.88.1

Control valves not to standard (solenoid and pneumatic)



Solenoid pilots 15 and 22 mm	
AE05	2.2.1
	2.5.1
Sizes 15 e 18 mm	
Solenoid 15 mm	
AE 1518	2.10.1
Pneumatic 15 mm	
AP 1518	2.16.1
Sub-bases 15 mm	
SB15 - PF - SB	2.20.1
Solenoid 18 mm	
AE1814	2.30.1
Pneumatic 18 mm	
AP1814	2.36.1
Sub-bases 18 mm	
SB18 - PF - SB	2.40.1
Series A1 (1/8" - 1/4" - 1/2")	
Solenoid 1/8"	
A1 E1	2.50.1 / 2.53.1
Pneumatic 1/8"	
A1P1	2.56.1 / 2.59.1
Sub-bases 1/8"	
A18 - A1C - A1T	2.65.1
Solenoid 1/4"	
A1E2	2.70.1 / 2.73.1
Pneumatic 1/4"	
A1P2	2.76.1 / 2.79.1
Sub-bases 1/4"	
A1B - A1C - A1T	2.85.1
Solenoid 1/2"	
A1E4 - A1K4	2.90.1 / 2.93.1
Pneumatic 1/2"	
A1P4	2.96.1 / 2.99.1
Solenoid valves for water and steam	
AEN - AEV - AEP	2.165.1
Integrated circuits	
AEF - APF - AEC - APC	2.170.1

Coils and connectors



Coils	
ASA12 - ASA 18	2.200.1
ASA19 - ASA2	2.200.10
ASA33 - ASA32	2.200.20
Connectors	
A052	2.210.1
A192	2.210,10
A122	2.210.20
A182	2.210.30

Manual and mechanical valves



Manual series A1 (1/8" - 1/4")	
A1MA1 (1/8")	2.230.1 / 2.233.1
A1MA2 (1/4")	2.236.1 / 2.239.1
Foot	
ACP	2.250.1 / 2.250.10
Mechanical	
Microvalves	
AM	2.255.1 / 2.260.1
AP	2.265.1
AC	2.270.1
Valves 1/8"	
AC	2.275.1

Ancillary valves



Slide valves	
V26	2.300.1
Mini ball valves	
MVS	2.310.1
Cast mini ball valves	
MS	2.330.1
Ball valves	
VSLO	2.340.1
Quick exhaust valves	
VSR	2.360.1
Unidirectional valves	
FF	2.370.1
Safety valves	
VS - VSCC	2.390.1

Ball valves with actuator



Actuators	
Single acting	
AR...SE	2.430.1
Double acting	
AR...DE	2.430.10
Ball valves with actuators	
Brass, single acting	
VSO...SE	2.431.1
Brass, double acting	
VSO...DE	2.431.10
INOX, single acting	
VSI...SE	2.431.10
INOX, double acting	
VSI...DE	2.431.11
Accessories	
R - F - AD - CS - CP - KSP	2.431.30

GENERAL INDEX START PAGE

PART 3

Airline equipment and pressure-gauges

Modular air-line equipment



Size 1/4”

A14FRRL - A14FRR
A14F - A14R - A14L 3.2.1

Size 3/8”

A38FRRL - A38FRR
A38F - A38R - A38L 3.2.10

Size 1/2”

A12FRRL - A12FRR
A12F - A12R - A12L 3.2.20

Size 1”

A01FRRL - A01FRR
A01F - A01R - A01L 3.2.30

Mounting accessories and spare parts



ASA.. - TM..F
TM - L - DT..
DSL - SL - DST
ST - SR - SFL
D - VMS - TP..F
TP..L - CA../25
CA../5 - DF
OL - ORT 3.5.1

Microregulators



AC400 3.10.1

Gauges



M - MR - MF - MP 3.50.1

PART 4

Accessories

Fittings and quick-lock couplings



Push-in fittings

R 4.2.1
R/150 4.3.1
RT 4.5.1
RP 4.10.1

Rapid fittings

C 4.20.1

Compression fittings

O 4.25.1

Standard fittings

A 4.35.1

Quick-lock couplings

20 4.45.1
21 4.45.11
26 4.45.21

Accessories



Multiple connectors

A113 - A213 4.55.1

Collectors

RX - RY - RZ - RR 4.60.1

Tubes and spirales

TR - TPU - TP - TN -
SR - SPU 4.65.1
FS - FW - CP - CPFW 4.65.11

Tube cutters

PTP - PTM - LPTP
LPTM - TSC 4.65.21

Blow guns

AH - AN - AM -
AR - AT - VR - SD 4.65.31

Washers

RA - RN - RR - RF - RB 4.65.41

Air reservoirs



SBCV 4.70.1
STSB - PRSB - VCSB 4.70.11

Flow regulators



In line

V52 - V53 - V54 - V55 4.80.1

For cylinders

V15 - V14 - V17 - V40 -
V18 - V41 - V20 - V39 -
V37 - V38 - V36 - V50 4.80.11

Silenced for valves

AVE - AVS - AVT -
AVL - AVC 4.80.50
ASN - ASP - ASPM -
ASE - AR 4.80.81

GENERAL INDEX START PAGE

continued PART 4

Accessories

Accessories with integrated function	
	
Fittings with non return valve	
V56	4.83.1
Circuit selectors	
V60	4.83.11
Pressure regulators	
V57 - V58	4.83.21
Adjustable pressure switches	
PR	4.83.31
Stop valves	
V45	4.83.11

Silencers	
	
SPD - SPF	4.85.1
AC - ACQ - AE - AEA - AEB - AF - AEP - AFE - AP - AT - ATT	4.85.11
M	4.85.21
Exhaust conveyors	
CSC1	4.90.1

PART 5

Stainless steel components

Cylinders and mounting accessories	
	
ISO 6432 cylinders	
MDMX - MDMAX	5.1.1
ISO 6431 and VDMA 24562 cylinders	
AMX	5.5.1
Piston rod clevis	
FFXISO	5.20.1
Piston rod ends	
RFX...SE	5.25.1
ISO 6432 mountings	
CFX - PX - FX	5.30.1
Mounting screw	
VBVIX - VBTRX	5.35.1
ISO 6431 mountings	
CFX - CMX - ASVX - SECX - CFSX - CMSX - ASSX - SECX -...ARAQ - FLVX - PBX - CTX	5.40.1

Ancillary valves	
	
Mini ball valves	
MVSX	5.100.1
Ball valves	
VSLX	5.101.1
Unidirectional valves	
FFX	5.105.1
Quick exhaust valves	
VSRX	5.110.1

Fittings and quick-lock couplings	
	
Push-in fittings	
RX	5.150.1
Rapid fittings	
CX	5.155.1
Compression fittings	
OX	5.160.1
Standard fittings	
AX	5.165.1
Quick-lock couplings	
GXA	5.170.1
GXF	5.172.1
Swivel joints	
GGLX - GGAX	5.175.1

Accessories	
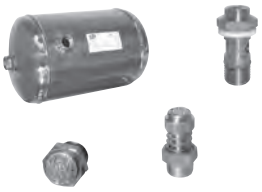	
Air reservoires	
SBCX	5.180.1
Flow regulators	
VX52 - VX53 - VX15	5.185.1
Silencer and exhaust silenced regulators	
AFEX - AEX - AVRX - AVEX	5.190.1

GENERAL INDEX START PAGE

ATEX Directive 94/9/CE

ATEX = ATmopheres **EX**plosives

ATEX Directive 94/9/EC was made by the European Union to regulate the market for products used in potential explosive atmospheres, classifying technical characteristics and regulations.

Products covered by the directive are equipment, protective systems, components, safety devices, control or regulation equipment, to be used on hazardous areas.

The importance of the **ATEX** Directive is that for the first time there are set Minimum Safety Requirements (94/9/EC Att. II) relative to non-electric equipment to work in potential explosive atmospheres, involving machines and components in industrial plants:

- Products are certified to specific categories and areas in which is possible for them to be used.
- Each component is to be supplied with an **ATEX** label, enclosing operating instructions and a declaration of conformity.
- The manufacturer has to have a quality system certified to ISO 9001.

ATEX

Connection between zones and categories.

Group I *(Underground, methane and/or combustible powders*		**Group II** *(Underground, methane and/or combustible powders)*					
Category M		**Category 1**		**Category 2**		**Category 3**	
1	2	G (Gas) (Zone 0)	D (Dust) (Zone 20)	G (Gas) (Zone 1)	D (Dust) (Zone 21)	G (Gas) (Zone 2)	D (Dust) (Zone 22)
Equipment that guarantees a very high safety level. Guaranteed operations in case of possible mistakes	Equipment that guarantees a very high safety level. Possible interruption in case of potential explosive atmosphere condition.	Equipment that guarantees a very high safety level. In case potential explosive atmospheres should occur frequently and for long periods.		Equipment that guarantees a high safety level. In case potential explosive atmospheres should occur occasionally.		Equipment that guarantees a standard safety level. In case potential explosive atmospheres should occur only rarely and for short period.	

Temperature Classifications (Group II)

Class of temperature	Max. external temperature (°C)
T1	450
T2	300
T3	200
T4	135
T5	100
T6	85

Example of classification and marking for a pneumatic component: CE Ex II 2 GDc T5

GENERAL INDEX START PAGE

API & ATEX

API can certify upon request the following product groups **ATEX, Group II, Category 2, Gas & Dust, Temperature T5:**

- Pneumatic valves, electric-valves and relative sub bases
- Linear pneumatic cylinders, guide units and mounting accessories.
- Air-reservoirs.

In order that the following products be certified, some modifications are required:

- ISO 6432 Cylinders - Single acting version should be with stainless steel spring.
- ISO 6431 Cylinders - With stainless steel piston-rod (option K), earthing labels on end caps.
- Aluminium cylinder mountings, with stainless steel pins and fixing screws.
- On magnetic cylinders, reed switches conforming to **ATEX** Directive should be applied.
- Air-reservoirs - Having more than two connections, one port for earthing, earthing label on body. All remaining ports to be equipped with stainless steel M-F stem increaser.
- Valves - Use limited to Gas Group IIB only (NO atmospheres with gas such as Hydrogen and Acetylene).
  Manual valves should be equipped with anti-friction washers; all valves having mechanical spring in stainless steel.
  Painted body valves, with earthing labels.

In the case of electric-valves complete with coil, the component belonging to lower category type will determine category of the complete component:

Example of electric-valve certified **ATEX II 3 GDc T5**

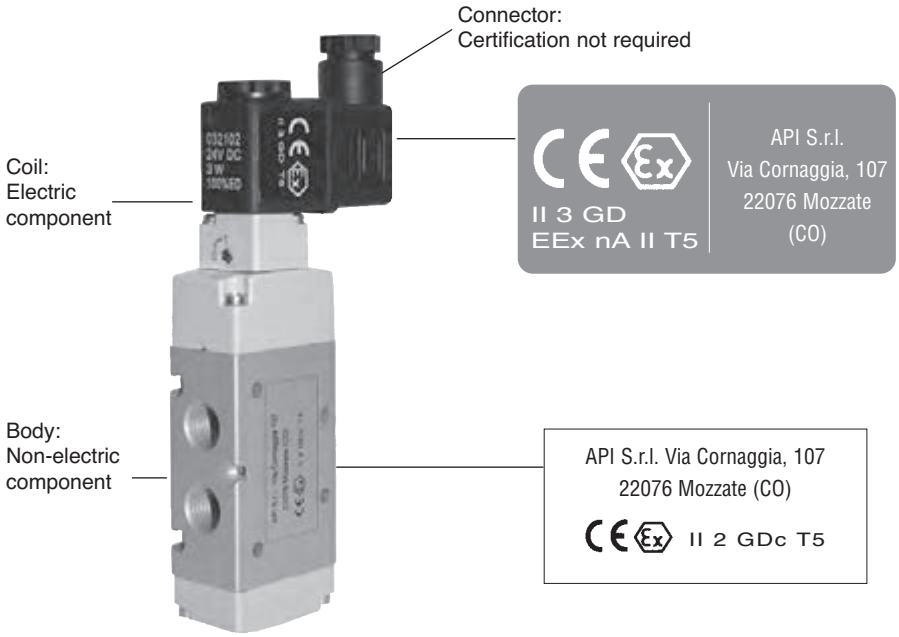

NOTE:
The electric-valve can also be certified **ATEX II 2 GDc T5**, applying proper coil having such requirements, type **ASA2..... / ATEX II 2 GD EEx nA II T5**

GENERAL INDEX START PAGE

Valves, solenoid valves and relevant sub-bases





Solenoid valves	
Series A1, 1/8”	2.50.1 - 2.53.1
Series A1, 1/4”	2.70.1 - 2.73.1
Series A1, 1/2”	2.90.1 - 2.99.1
Pneumatically operated valves	
Series A1, 1/8”	2.56.1 - 2.59.1
Series A1, 1/4”	2.76.1 - 2.79.1
Sub-bases	
Series A1, 1/8”	2.65.1
Series A1, 1/4”	2.85.1
NAMUR solenoid valves	2.88.1
Valves ISO 5599/1	
ISO1	2.110.1 - 2.120.1
ISO2	2.130.1 - 2.137.1
Coils	
ASA12.... ATEX II GDc T5	2.200.1
ASA2..... ATEX II GDc T5	2.200.10
Manually operated valves	
Series A1, 1/8”	2.230.1 - 2.233.1
Series A1, 1/4”	2.236.1 - 2.239.1

Pneumatic cylinders, slide units and mounting accessories







ISO 6432 cylinders	
MSM	1.2.1
MDM - MDMA	1.2.10
MDMX - MDMAX	5.1.1
ISO 6431 and VDMA 24562 cylinders	
AMAK - AMTK	1.5.1 - 1.8.1
AMX	5.5.1
Round cylinders	
REDMK	1.11.1
Compact cylinders	
CS	1.17.1
CD	1.17.10
Short stroke cylinders	
BSM	1.20.1
BDM - BDMN	1.20.10
Compact guided cylinders	
GEDB - GEDS	1.23.1
Rodless cylinders	
S1 - S2	1.26.1
S3 - S5 - S6	1.26.10
S4	1.26.20
Slide units	
UGLB - UGPB - UGPS	1.70.1 - 1.70.20
Sensors	
BIM - INT - Y1X ATEX II 1 GDc T5	

Air reservoirs, stainless steel quick-lock couplings, stainless steel swivel joints

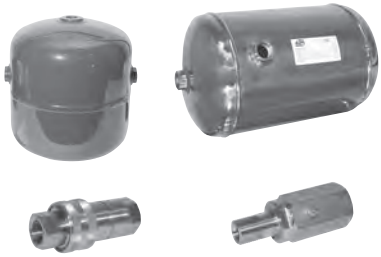

Air reservoirs	
SBCV	4.70.1
SBCX	5.180.1
Stainless steel quick couplings	
GXA	5.170.1
GXF	5.172.1
Stainless steel swivel joints	
GGLX - GGAX	5.175.1

GENERAL INDEX START PAGE

Special applications
As a natural consequence of competition in recent years it has been necessary for manufacturers to fulfil customers requirements with special custom made products.
A.P.I. S.r.l., whose aim is to satisfy its customers and to improve its way of working, decided to pursue this and to consider these special products as its strength from researching to machining, from mounting to testing.

Complete systems
In order to achieve the aims mentioned above, A.P.I. S.r.l. are now in a position to manufacture complete systems, such as control panels, to satisfy customer requirements, enabling the customer to achieve their objectives.

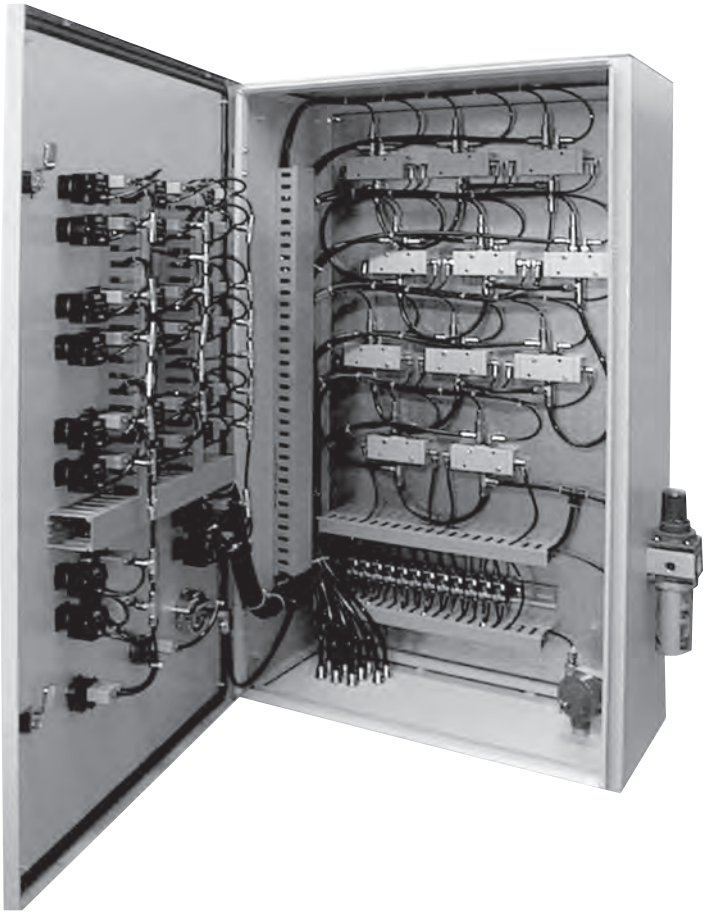

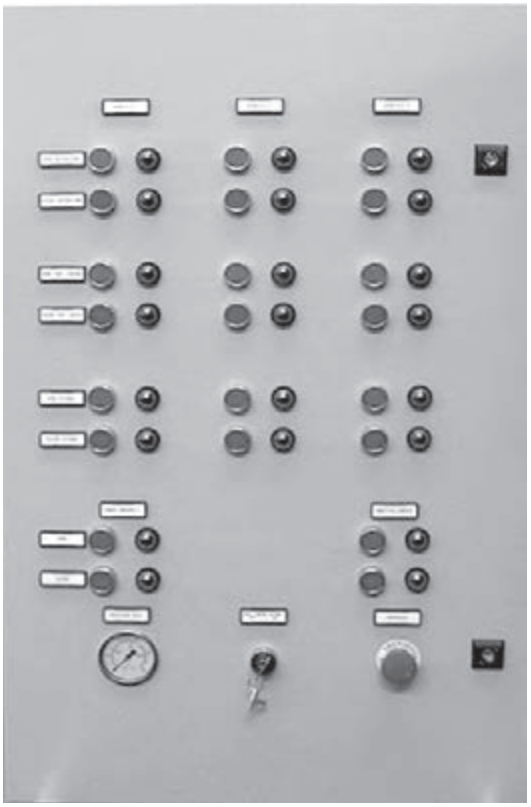



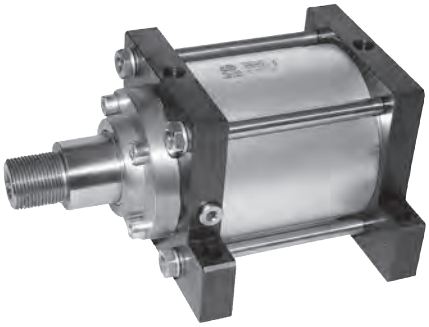



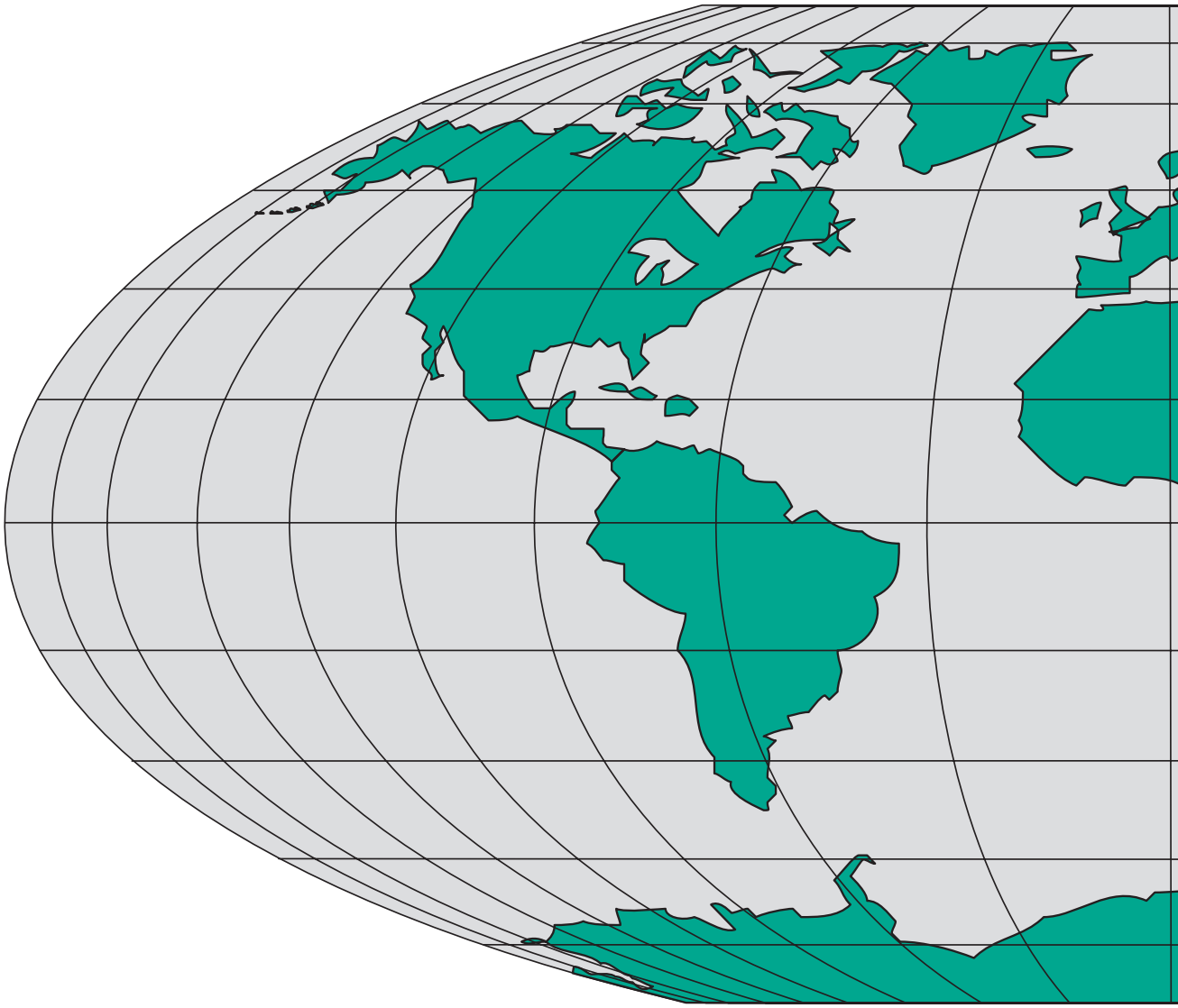

For information on the distribution net, please apply to our Commercial Department:
info@api-pneumatic.com

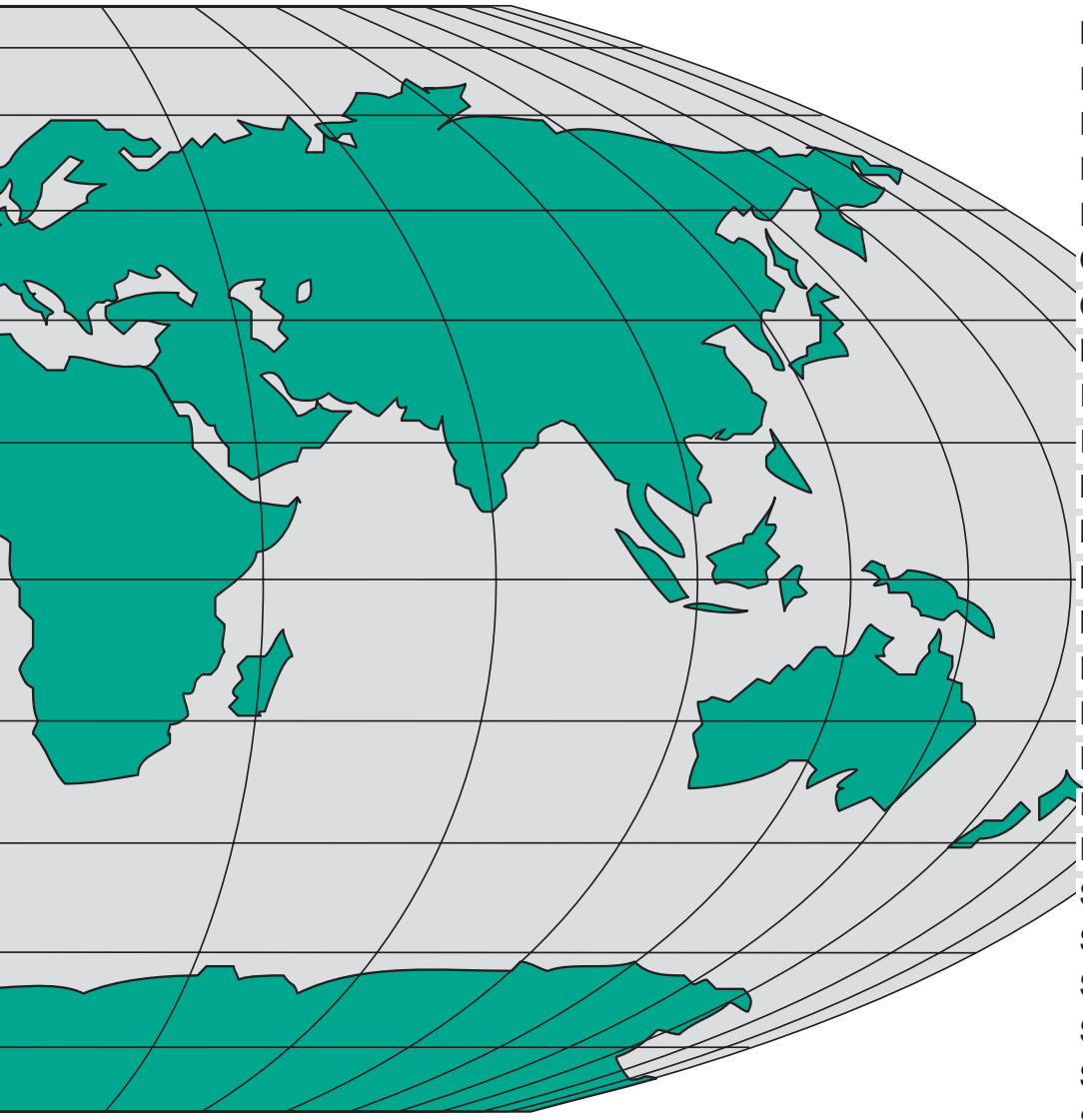

Austria
Belgium
Bulgaria
Canada
Colombia
Cyprus
Czech Republic
Denmark
Egypt
England
Finland
France
Germany
Greece
Holland
Iceland
Ireland
Malaysia
Maroc
Mexico
Norge
Peru
Poland
Portugal
Rumania
Russia
Saudi Arabia
Slovenia
South Africa
Spain
Sweden
Switzerland
Syria
Taiwan
Thailand
Turkey
United Arab Emirates
U.S.A.
Venezuela

PHYSICAL MAGNITUDES AND DATA

The pneumatic components use compressed air. Pressure is a force that is applied per unit of area. The pressure that can be measured with the special instrument - the manometer - is called manometric or relative to the atmospheric pressure in which the instrument is emerged. Absolute pressure is obtained by adding atmospheric pressure to the manometric pressure.

UNITS OF MEASUREMENT - INTERNATIONAL SYSTEM (SI)

The SI units have been introduced in the majority of countries on the basis of international conventions.
The aim is to achieve sole **UNITS OF MEASUREMENT** in order to avoid the difficult conversions from one system of measurement to another.
The **SI SYSTEM** considers seven fundamental physical magnitudes with their respective units of measurement. All the other units of measurement are derived from these.
The fundamental units are:
Length in metres [m], mass in kilograms [Kg], time in seconds [s], electrical current in amperes [A], temperature in degrees Kelvin [°K], molecular quantity in moles [mol], luminous intensity in candelas [cd].
Forces are derived magnitudes and are expressed in Newtons [N].
According to the fundamental law of dynamics, one Newton is the force required to accelerate a mass of 1 Kg
1 m/s^2.
As 1 Kp is the force required to give a mass of 1 Kg the acceleration of gravity, which is equivalent to 9.81 m/s^2, it follows that 1 Kp = 9.81 N = approx. 10 N. Indeed, the latter value is assumed in order to avoid an excessive precision of calculation.
Pressure is thus measured in N/m^2, a unit known as the Pascal [Pa]. The unit of measurement that is equivalent to 100x103 Pa [bar] is still accepted. We can write 1 bar = 100 KPa.

SI UNITS

Magnitude	Symbol of formula	SI Unit			Accepted units of measurement		Conversion factors
		Name	Unit	Multiple	Name	Unit	
Length	l	Metre	m	km cm mm			
Area	A	Square metre	m^2	cm^2 mm^2	Are Hectare	a ha	1 a = 10^2 m^2 used only 1 ha = 10^4 m^2 for land
Volume	V	Cubic metre	m^3	cm^3 mm^3	Litre	l	1 l = dm^3 = 0,001 m^3
Mass	m	Kilogram	kg	Mg g mg	Ton	t	1 t = 1000 kg = 1 Mg
Time	t	Second	s		Minute Hour Day	min h d	1 min = 60 s 1 h = 60 min = 3600 s 1 d = 24 h = 86400 s
Number of revolutions	n	Revs per second	1/s s^{-1}		Revs per minute	1/min min^{-1}	1/min = 1/60 s
Velocity	v	Metre per second	m/s		Kilometre per hour	km/h	1 km/h = $\frac{1}{3,6}$ m/s
Flow	V	Cubic metre per second	m^3/s	m^3/h l/min l/s			1 m^3/h = 16,67 l/min = 0,28 l/s 1 m^3/s = 60.000 l/min
Force	F	Newton	N				1 N = 1 kg m/s^2 1 kp = 9,81 N = 10 N 1 kp = 1 da N
Pressure	P	Newton per square metre Pascal	N/m^2 Pa		Bar	bar	1 N/m^2 = 1 Pa 1 bar = 10^5 Pa
Energy Work Quantity of calories	W	Joule	J		Kilowatt-hour	kWh	1 J = 1 Nm = 1 Ws = 1 kg m^2/s^2 1 kWh = 3,6 Mj
Moment of force, torque	M	Newton-metre	Nm				1 kpm = 9,81 Nm
Power Energy absorption Heat absorption	P	Watt	W				1 W = 1 J/s = 1 Nm/s 1 kpm/s = 9,81 W
Dynamic viscosity	η (μ)	Pascal-second	Pas				1 Pas = 1 Ns/m^2 = 1000 mPas 1 cp = 1 mPas
Kinetic viscosity	υ	Square metre per second	m^2/s				1 cST = 10^{-6} m^2/s 1 cSt = 1 mm^2/s
Temperature		Kelvin	k		Degree Centigrade	°C	
Frequency	f	Hertz	Hz				

GENERAL INDEX START PAGE

VOLUME IN NORMAL CONDITIONS

The following are considered normal conditions of the fluid: temperature °K = 273 + 20 °C, pressure = 1 bar.
For the following considerations, the equation of state of perfect gases is also accepted as valid for the actual air gas.
This is: PV = nRT where P = absolute pressure of the gas [bar]
V = volume [m^3]
T = absolute temperature [°K]

Imagine that we wish to bring a given volume of air V1, subject to pressure P1 and temperature T1 back to the normal conditions P0, V0, T0.
We can say that the situation will pass from P1V1 = nRT1 to P0V0 = nRT0.
Therefore, P1V1/T1 = P0V0/T0, from which it follows that:
V0 = V1x(P1/P0)x(T0/T1).
In normal conditions volume is directly proportional to the relationship of the pressure values and inversely to that of the temperature values. As the latter are expressed as 273 + °C, the influence of their relationship is negligible, consequently we normally consider:
V0 = (P1/P0)x V1 [Nm^3].

Table of symbol

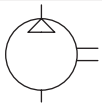	COMPRESSOR
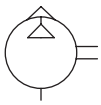	VACUUM PUMP
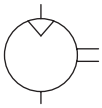	PNEUMATIC MOTOR WITH ONE DIRECTION OF ROTATION
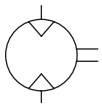	PNEUMATIC MOTOR WITH TWO DIRECTION OF ROTATION
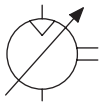	PNEUMATIC MOTOR WITH ONE DIRECTION OF ROTATION AND VARIABLE DISPLACEMENT VOLUME
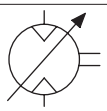	PNEUMATIC MOTOR WITH 2 DIRECTION OF ROTATION AND VARIABLE DISPLACEMENT VOLUME
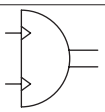	ROTARY CYLINDER
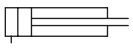	SINGLE ACTING CYLINDER WITH RETURN STROKE BY NON-DEFINED STROKE
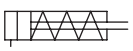	SINGLE ACTING WITH RETURN STROKE BY SPRING
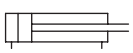	DOUBLE ACTING CYLINDER
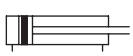	DOUBLE ACTING CYLINDER WITH PERMANENT MAGNET
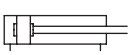	DOUBLE ACTING CYLINDER WITH CUSHIONINGS NON-ADJUSTABLE AT BOTH ENDS

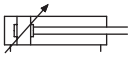	DOUBLE ACTING CYLINDER WITH CUSHIONINGS ADJUSTABLE AT BOTH ENDS
	SINGLE ACTING TELESCOPIC CYLINDER
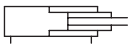	DOUBLE ACTING TELESCOPIC CYLINDER
	DOUBLE ACTING CYLINDER WITH THROUGH ROD
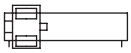	DOUBLE ACTING CYLINDER WITHOUT MAGNETIC COUPLING ROD (PISTON - MOBILE EQUIPMENT)
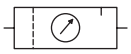	CONDITIONING UNIT F.R.L (FILTER, REGULATOR, LUBRICATOR)
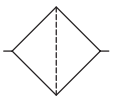	FILTER
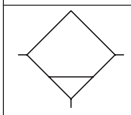	MANUALLY OPERATED WATER SEPARATOR
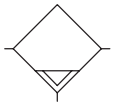	WATER SEPARATOR WITH AUTOMATIC DRAINING
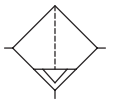	FILTER WITH WATER SEPARATOR (WITH AUTOMATIC DRAINING)
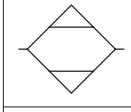	AIR DRIER
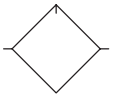	LUBRICATOR

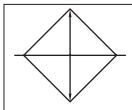	COOLER (WITH REPRESENTATION OF THE COOLING PIPES)
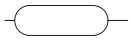	VESSEL (AIR-RESERVOIR)
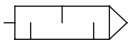	SILENCER
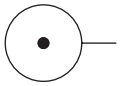	PRESSURE SOURCE
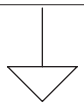	EXHAUST
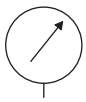	PRESSURE GAUGE
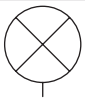	VISUAL DISPLAY
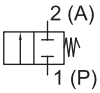	2/2-WAY VALVE N.C. (2 CLOSED PORTS, CLOSED POSITION IN NEUTRAL POSITION)
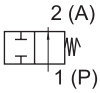	2/2-WAY VALVE N.O. (ONE FLOW PATH, FLOW IN NEUTRAL POSITION)
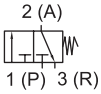	3/2-WAY VALVE N.C. (IN 1ST SWITCH POSITION INLET IS CLOSED)
	3/2-WAY VALVE N.O. (IN THE 2ND POSITION AIR IS EXHAUSTED OR THE RETURN FLOW LINE IS CLOSED)
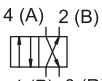	4/2-WAY VALVE (WITH 2 OPEN POSITIONS AND ONE EXHAUST)
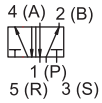	5/2-WAY VALVE (WITH 2 OPEN POSITIONS AND 2 EXHAUSTS)
	3/3-WAY VALVE WITH CLOSED NEUTRAL POSITION AND 2 OPEN POSITIONS
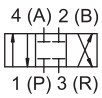	4/3-WAY VALVE WITH CLOSED NEUTRAL POSITION AND 2 OPEN POSITIONS
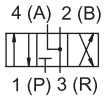	4/3-WAY VALVE WITH FLOATING NEUTRAL POSITION AND 2 OPEN POSITIONS
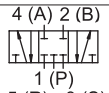	5/3-WAY VALVE WITH CLOSED NEUTRAL POSITION AND 2 OPEN POSITIONS

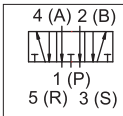	5/3-WAY VALVE WITH FLOATING NEUTRAL POSITION AND 2 OPEN POSITIONS
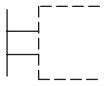	GENERAL MANUAL OPERATION (WITHOUT SPECIFYING TYPE OF CONTROL)
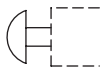	MANUAL OPERATION BY PUSHBUTTON
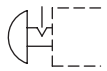	MANUAL OPERATION BY PUSHBUTTON WITH MECHANICAL GRIP
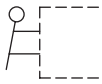	MANUAL OPERATION BY LEVER
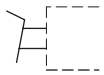	MANUAL OPERATION BY PEDAL
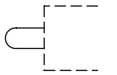	MECHANICAL OPERATION BY STEM OR KEY
	MECHANICAL OPERATION BY SPRING
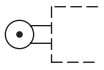	MECHANICAL OPERATION BY ROLLER
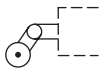	MECHANICAL OPERATION BY ROLLER OPERATING IN ONE DIRECTION ONLY (IDLE RETURN)
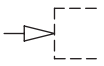	PNEUMATIC OPERATION WITH DIRECT ACTION BY APPLICATION OF PRESSURE
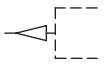	PNEUMATIC OPERATION BY PRESSURE RELIEF
	PNEUMATIC OPERATION BY DIFFERENT CONTROL SURFACES. IN THE SYMBOL THE LARGER RECTANGLE REPRESENTS THE LARGER CONTROL SURFACE
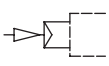	PNEUMATIC OPERATION BY APPLICATION OF PRESSURE TO THE PILOT VALVE
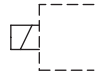	ELECTRICAL OPERATION BY SOLENOID WITH ONE WINDING
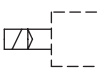	COMBINED OPERATION BY SOLENOID AND PILOT VALVE
	COMBINED OPERATION: BY SOLENOID AND PILOT VALVE AND GENERAL MANUAL

GENERAL INDEX START PAGE

	GENERICALLY ELECTRICAL AND MANUAL OPERATION AND EXTERNAL AIR PILOT AT BOTH ENDS: TWO STABLE POSITION
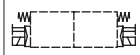	GENERICALLY ELECTRIC AND MANUAL OPERATION AND EXTERNAL AIR PILOT FOR 3 POSITION VALVE
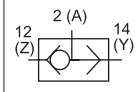	SHUTTLE VALVE (OR TYPE)
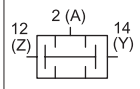	TWO PRESSURE VALVE (AND TYPE)
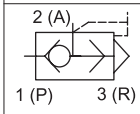	QUICK-EXHAUST VALVE
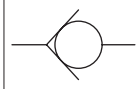	NON-RETURN UNLOADED VALVE
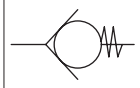	NON-RETURN SPRING-LOADED VALVE
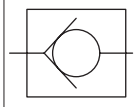	CONTROLLED NON-RETURN VALVE
	FLOW RESTRICTOR WITH CONSTANT SECTION
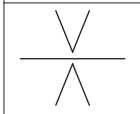	DIAPHRAGM FLOW RESTRICTOR WITH CONSTANT SECTION
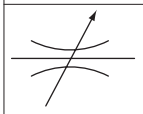	ADJUSTABLE FLOW CONTROL VALVE
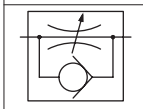	FLOW CONTROL VALVE WITH UNIDIRECTIONAL ADJUSTEMENT
	CONNECTED QUICK-LOCK COUPLINGS WITHOUT MECHANICALLY OPENING NON-RETURN VALVE
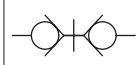	CONNECTED QUICK-LOCK COUPLINGS WITH MECHANICALLY OPENING NON-RETURN VALVE
	UNCOUPLED (WITH OPEN END) QUICK-LOCK COUPLINGS WITHOUT NON-RETURN VALVE
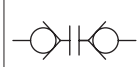	UNCOUPLED QUICK-LOCK COUPLINGS WITH END BLOCKED BY A NON-RETURN VALVE WITHOUT SPRING
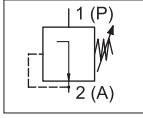	REGULATOR WITHOUT EXHAUST

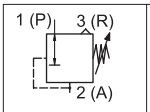	REGULATOR WITH EXHAUST
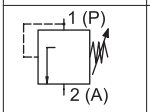	SEQUENCE VALVE (PRIORITY VALVE)
	SHUT OFF VALVE
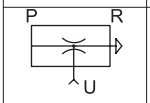	VACUUM GENERATOR (FOR VENTURI EFFECT)
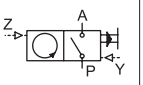	PNEUMATIC PRE-DETERMINING COUNTER
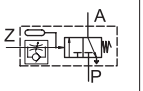	PNEUMATIC TIMER WITH DELAYED ENERGISING, WITH VALVE 3/2 N.C.
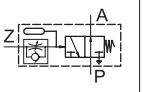	PNEUMATIC TIMER WITH DELAYED ENERGISING, WITH VALVE 3/2 N.O.
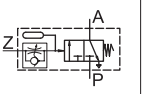	PNEUMATIC TIMER WITH DELAYED DE-ENERGISING, WITH VALVE 3/2 N.C.
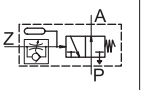	PNEUMATIC TIMER WITH DELAYED DE-ENERGISING, WITH VALVE 3/2 N.O.
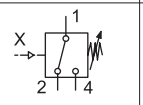	PRESSURE SWITCH (ADJUSTABLE)
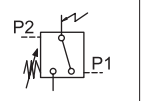	PNEUMATIC-ELECTRICAL CONVERTER
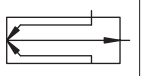	REFLEX SENSOR
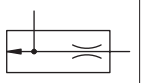	BACK PRESSURE END STOP
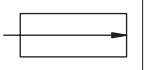	AIR BARRIER SENDER (EMITTER)
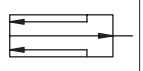	AIR BARRIER RECEIVER
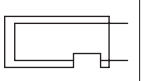	GAP SENSOR
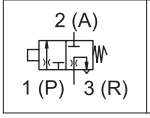	MAGNETICALLY OPERATED PNEUMATIC REED SWITCH

Notes

GENERAL INDEX START PAGE

CYLINDERS AND THEIR ACCESSORIES




PAGE 1.0 1

VALVES

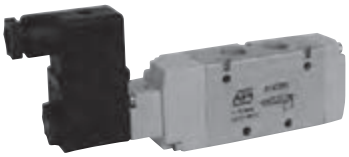


PAGE 2.0 2

AIRLINE EQUIPMENT AND PRESSURE-GAUGES




PAGE 3.0 3

ACCESSORIES



PAGE 4.0 4

STAINLESS STEEL COMPONENTS

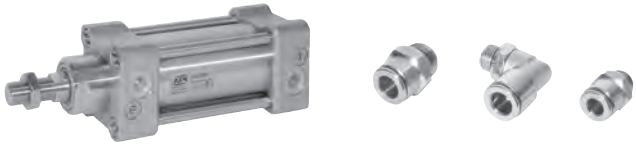

PAGE 5.0 5

Notes

1

Technical data:
Forces and working conditions

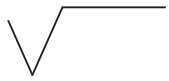

from page 1.1.1

ISO 6432



from page 1.2.1

ISO 6431 (ø 32-125)



from page 1.5.1

ISO 6431 (ø 160-320)



from page 1.8.1

Round cylinders



from page 1.11.1

CNOMO



from page 1.14.1

Compact cylinders



from page 1.17.1

Short stroke cylinders



from page 1.20.1

Compact guided cylinders



from page 1.23.1

Rodless cylinders



from page 1.26.1

Rotary cylinders



from page 1.40.1

Hi-rotor cylinders



from page 1.50.1

Rotary actuators ARC



from page 1.50.20

Rotary actuators ARP



from page 1.50.30

Cartridge cylinders

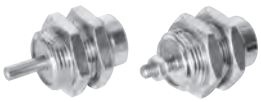

from page 1.55.1

Slide units for cylinders ISO 6432



from page 1.70.1

Slide units for cylinders ISO 6431



from page 1.70.20

Piston rod brake for cylinders ISO 6432



from page 1.75.1

Piston rod brake for cylinders ISO 6431



from page 1.75.10

Hand grips



from page 1.80.1

Piston rod accessories



from page 1.85.1

Mounting accessories for cylinders ISO 6432



from page 1.95.1

Mounting accessories for cylinders ISO 6431



from page 1.97.1

Mounting accessories for cylinders CNOMO



from page 1.99.1

Mounting accessories for cylinders compact UNITOP



from page 1.100.1

Shock absorbers



from page 1.105.1

Switches and brackets



from page 1.110.1

The pneumatic cylinder is an engine that uses pneumatic energy, transforming it into mechanical work by means of rectilinear movement.
It is composed of a tube, closed at the ends by two heads, within which a piston moves, separating two chambers. The piston is equipped with a rod that, when exiting through one or both of the heads, permits the exploitation of the force developed by the cylinder.
The characteristic parameters of a cylinder are:

Bore	=	internal diameter of the tube [mm].
Stroke	=	working movement to be performed [mm].
Diameter of piston rod	=	closely correlated to the bore [mm].
Number of actings	=	number of strokes per cycle during which work is performed. These may be either one (single acting); or two (double acting).

Operating pressure [1 bar].
Operating temperature [°C].
Translation velocity [m/s].
Number of adjustable end cushionings.
Kinetic energy absorbed by the cushionings [Nm].
Air consumption [nl/min].
Theoretical force Ft [N].

BORE Ø

A finite number of bores are available, all of which are standardized. The range goes from bores measuring just a few millimetres to those of 300 mm.

PRESSURE p

This value is not very variable, due to technical-economical reasons. It covers the range 5-7 bar. A system operating at 6 bar is considered optimized.

PISTON ROD DIAMETER d

This is standardized for all the bores available.

STROKE c

The most frequently requested strokes are available in our warehouse. Any technically compatible stroke can be supplied in a short time. It is advisable to choose easily available strokes that are greater than the operating strokes, halting the stoke at the desired value by means of external mechanical stops, in order to obtain mechanical precision and greater durability of the cylinder.

OPERATING TEMPERATURE

Ambient temperature must not be such as to make the cylinder assume values outside the temperature range for which it was constructed. It is possible to construct cylinders that are resistant to very low or very high temperatures, using special materials.
The catalogues always show the operating temperature range.
The cylinder can also reach high temperatures due to particular conditions of use: in general, when the friction between the tube and the mobile apparatus increases greatly (e.g. due to high speeds with insufficient lubrication, the exhaustion of assembly lubrication or excessive compression of the air). The seals of the cylinder are the most short-lived component and those that are most sensitive to temperature.

TRANSLATION VELOCITY v

It is advisable to adjust the translation velocity by means of the air discharge.
The movement of the piston is fairly regular even with minimum velocities of 40 mm/s.
The maximum velocity acceptable without additional lubrication to assembly lubrication, is equivalent to 1000 mm/s. Velocities of 2 ÷ 3 m/s can be reached with appropriate lubrication.
For high velocities, as for high masses, the kinetic energy to be reabsorbed is excessive for the air cushionings. It is necessary to use external hydraulic cushionings of an appropriate size.

THEORETICAL FORCE Ft

The theoretical force generated by a cylinder can be calculated by multiplying the actual area of the piston subjected to pressure by the operating pressure.
For cylinders during pushing, the effective area of the piston corresponds to the bore:

$Ft = \pi \Phi^2 p / 40$ [N]

$\Phi =$ bore [mm]
P = operating pressure [bar]

N.B.: the formula considers passages from bars to N/m^2 and from mm^2 to m^2.

For cylinders in traction, it is necessary to subtract the area of the rod from that of the piston:

$Ft = \pi (\Phi^2 - d^2) p / 40$ [N]

The **MOTIVE POWER F** available to the piston rod is:

F = Ft - R
Where R represents a force of reaction that comprises numerous factors: **friction, form and type of seals, operating pressure, counter-pressure at discharge.**
The value of R is not easy to quantify as its component factors are not only numerous, but also variable. A cautious estimate for usual applications could be 30% **Ft**.
As shown by the graph illustrated below, which indicates the progress of the pressure values of delivery and discharge during the uniform movement of a cylinder, the delivery value Pm and the discharge value Ps remain constant during the stroke of the cylinder, if we exclude the brief transitory periods: of acceleration following the switching of the distributing valve and cushion at the end of the stroke.
The cylinder is thus prevalently subject to a motive power F proportional to Pm and the pushing surface, and to a counter-pressure force **Fs** proportional to the pressure Ps and the section upon which it acts, both of which are constant. The load reaction Fc must be added to these two forces.
In other words, the cylinder, in dynamic equilibrium, will - like all engines in this state - find itself under the action of contrasting forces that balance each other. It will move at a constant speed under the action of a constant force.

Ft - Fs - Fa = Fc 0Where Fs is the counter-pressure force and Fa is a force that bears in mind the friction and reduction of the operating power, to which Ft is linked, which does not reach the static network pressure, as can be seen in the graph.
During the transitory acceleration period, the force Fs is very low, as the air is being discharged. As the speed of the piston increases, the air being discharged is compressed and the force Fs increases until the state of equilibrium is reached.
For example, we wish to find the cylinder capable of overcoming the load value Fc = 1200 [N].
The theoretical force Ft must be at least 30% greater. Let's assume that Ft = 1600 [N].
This gives the following result:

$\Phi = \sqrt{40Ft/\pi p}$ $\Phi = \sqrt{40x1600/3,14x6}$ $\cong 58$ [mm]

The closest standardized bores turn out to be: 50 mm and 63 mm. It is advisable to choose the bore Φ = 63 mm, also because it enables a reserve of power to be obtained.
The uniform movement of the cylinder can be obtained by regulating the air at the discharge.
In order to obtain high values, on the other hand, it is necessary to make an appropriate increase in the discharge space in order to obtain accelerated movements, as the equilibrating force of counter-pressure is no longer present.

PEAK LOAD

In the case of long strokes, the load that can be applied to the piston rod is reduced due to the decrease in resistance at peak load.
The lifespan of a cylinder depends largely on its mechanical application. Installation must be performed in such a way as to avoid, or at least minimize, bending moments and radial loads on the piston rod (the most onerous kind of anchorage is the hinge type).
If only axial loads need be applied, the piston rod will be subjected to the peak load during pushing.
As the acceptable peak load is proportional to the diameter of the piston rod **d** (through the elastic modulus and the inertia moment) and inversely proportional to twice the stroke (length of free inflexion), in the case in which it does not allow the application of the required force, it is necessary to increase the diameter of the piston rod, passing to a suitably larger bore.

The choice of the standardized bore that best satisfies the requirements of the application in question is not just linked to the satisfaction of the force to be provided, but also to that of other conditions. These include the need to always have a power reserve (by choosing a larger size) and that of not causing excessive stress to the cushionings.

AIR CONSUMPTION [nl/min]

Air consumption air is a working value; it has a significant influence on costs.
It is possible to calculate the average air consumption using the following formula:

$Q = \pi \Phi^2 /4x\ 60\ c/t\ x\ (p+p0) / p0\ x\ 10^{-3}\ x\ 10^{-3}$ [nl/min]

Where:
Q = air consumption [nl/min]
Φ = bore [mm]
c = stroke [mm]
t = time taken to perform the stroke [s]
p = atmospheric operating pressure [bar]
p0 = atmospheric pressure: 1 bar

For example, we want to calculate the consumption of the following cylinder:
d = 50 mm; c = 300 mm; t = 0,45 s; p = 6 bar

$Q = 3{,}14\ x\ 25\ x\ 10^2/4\ x\ (60\ x\ 3\ w\ 10^2/0{,}45)\ x\ 7\ \ 10^{-3}\ x\ 10^{-3} = 550$ [nl/min]

THEORETICAL TABLE OF CYLINDER FORCES

PISTON FORCE

The piston force (F) can be determined on the basis of the following formulae relating to the area of the piston rod (A), operating pressure (p) and friction (R):

Piston force $F = a \cdot p - R$

(final pressure) $F = p \cdot 10 \dfrac{d2 \cdot \pi \cdot 10}{4} - R$

p = bar
d = bore (mm)
R = friction = 10% (N)
A = area of piston rod
F = actual force of piston (N)

Pressure/force table for pneumatic cylinders										
Operating pressure bar	1	2	3	4	5	6	7	8	9	10
Bore mm	Piston force (N)									
6	2,5	5,1	7,6	10,2	12,7	15,3	17,8	20,4	22,9	25,4
8	4,5	9,0	13,6	18,1	22,6	27,1	31,7	36,2	40,7	45,2
10	7,1	14,1	21,2	28,3	35,3	42,4	49,5	56,5	63,6	70,7
12	10,2	20,4	30,5	40,7	50,9	61,0	71,3	81,4	91,6	101
16	18,1	36,2	54,3	72,4	90,5	109	127	145	163	181
20	28,3	56,5	84,8	113	141	170	198	226	254	283
25	44,2	88,4	133	177	221	265	309	353	398	442
32	72,3	145	217	290	362	434	507	579	651	724
40	113	226	339	452	565	679	792	905	1020	1130
50	177	353	530	707	884	1060	1240	1410	1590	1770
63	281	561	842	1120	1400	1680	1960	2240	2520	2810
80	452	905	1360	1810	2260	2710	3170	3620	4070	4520
100	707	1410	2120	2830	3530	4240	4950	5650	6360	7070
125	1100	2210	3310	4420	5520	6630	7730	8840	9940	11000
160	1810	3620	5430	7240	9050	10900	12700	14500	16300	18100
200	2830	5650	8480	11300	14100	17000	19800	22600	25400	28300
250	4420	8840	13300	17700	22100	26500	30900	35300	39800	44200
320	7240	14500	21700	29000	36200	43400	50700	57900	65100	72400

Standard executions		
Version	Symbol	Type
Non magnetic	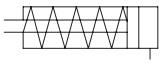	MS
Magnetic	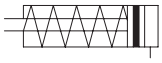	MSM

On request, they can be supplied according Directive 94/9/EC **- ATEX**
CE Ex **II 2 GDc T5**

Options		Suffix
Through rod	from bore 16 to 25 mm.	P
Rear spring	from bore 16 to 25 mm.	T
Anti-rotating rod	from bore 16 to 25 mm.	N
Seals FKM	max 150 °C	V
Extended rod in hardened and chrome plated steel suitable for piston rod brake	from bore 12 to 25 mm.	B
Special versions on request		/ S

The options can be combined one another (when this is possible)



Series of cylinders conforming to ISO 6432 standards
The heads are connected with the body through rolling; this guarantees perfect fit.
The cushionings are in nitrile rubber to cushion the impact of the piston.
The standard cylinders are provided with head and rod nut.
One or more magnetic reed switches can be applied to the magnetic type.

For the magnetic reed switches type ASV see from page 1.110.1.
For mounting accessories see from page 1.95.1.
For rod accessories see from page 1.85.1.
For dimensions of the cylinder with the piston rod brake see page 1.75.5.
Seal kits not available for these cylinders.
How to order: 25 / 50 MSP

25	/	50	MS	P
Bore	/	Stroke	Type	Option

Technical data	
Fluid	Compressed filtered air with or without lubrication. Lubrication, if be used, must be continous.
Pressure	max 10 bar
Temperature range	-30 °C ÷ + 80°C
Materials	Heads: Anodised aluminium Tube: Stainless steel AISI 304 Rod: Stainless steel AISI 303 Seals: Polyurethane - Brass piston

Bore (mm)	Standard strokes (mm)	Max stroke (mm)	Thrust force at 6 bar (N)	Traction force of the spring (N)					
				Stroke 10		Stroke 25		Stroke 50	
				min.	max	min.	max	min.	max
8	10, 25, 50	50	20	4,8	5,3	4	5,3	3,2	5,3
10			35	4,8	5,3	4	5,3	3,2	5,3
12			50	6,3	6,9	5,4	6,9	3,9	6,9
16			90	13,1	14	11,8	14	9,7	14
20			148	18,1	19,4	16,4	19,4	13,4	19,4
25			250	22,9	23,9	21,1	23,9	17,7	23,9

Type: **MS-MSM**

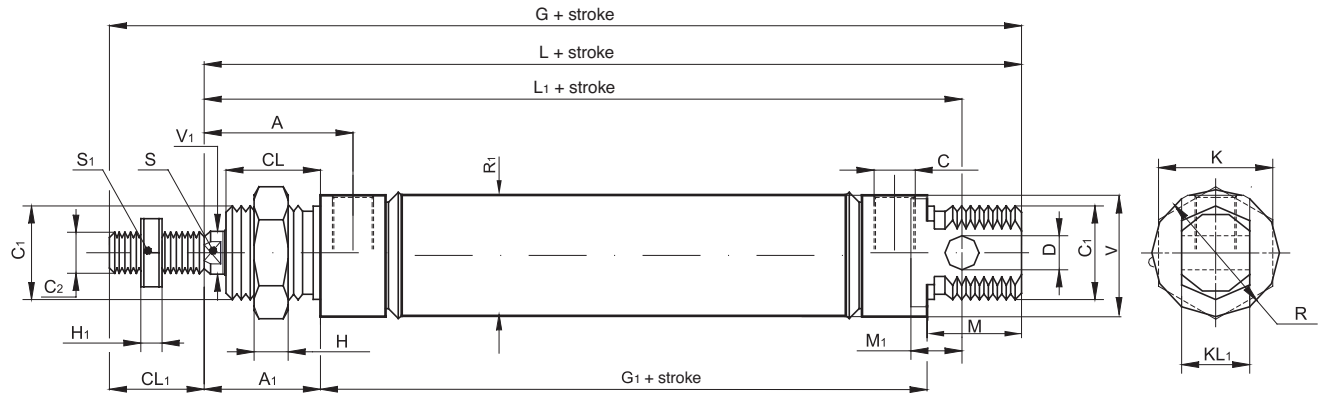

ø mm	C_2	V_1	C_1	R	KL_1	R_1	V	D	CL_1	L_1	L	M	G_1	A_1	CL	A	M_1	S	C	G	K	H	H_1	S_1
8	M4	4	M12x1,25	16	8	9,27	15	4	12	64	74	12	46	16	12	21	6	/	M5	86	19	6	2	7
10	M4	4	M12x1,25	16	8	11,27	15	4	12	64	74	12	46	16	12	21	6	/	M5	86	19	6	2	7
12	M6	6	M16x1,5	19	12	13,27	18	6	16	75	88	16	48	22	16	27	9	5	M5	104	22	5	3	10
16	M6	6	M16x1,5	21	12	17,27	19	6	16	82	96	16	58	22	16	27	9	5	M5	112	19	5	3	12
20	M8	8	M22x1.5	30	16	21,27	28,5	8	20	95	105	22	59	24	18	31,5	12	7	1/8”	125	27	8	4	14
25	M10x1,25	10	M22x1,5	30	16	26,5	28,5	8	22	104	114	22	64	28	20	36	12	9	1/8”	136	27	8	6	17

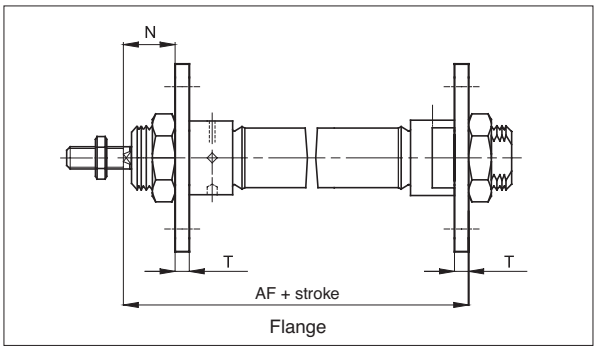

Flange

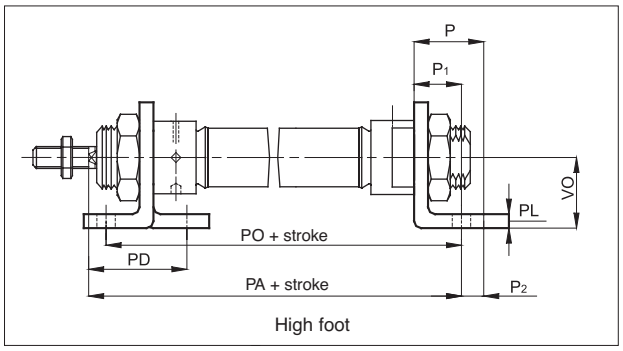

High foot

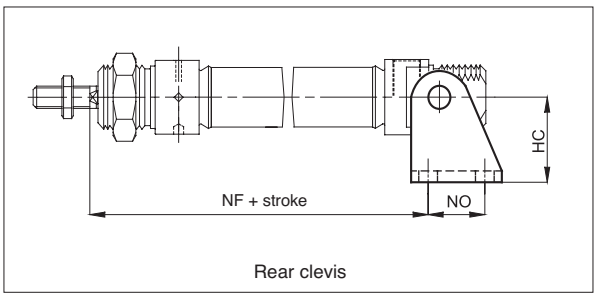

Rear clevis

ø mm	AF	HC	P	P_1	P_2	PA	PD	PL	PO	T	VO	N	NF	NO
8	65	24	16	11	5	73	24	3	68	3	16	13	62,5	12,5
10	65	24	16	11	5	73	24	3	68	3	16	13	62,5	12,5
12	76	27	20	14	6	86	32	4	78	4	20	18	73	15
16	84	27	20	14	6	94	32	4	86	4	20	18	80	15
20	88	30	25	17	8	100	36	5	93	5	25	19	91	20
25	97	30	25	17	8	109	40	5	98	5	25	23	100	20

For dimensions and codes of the accessories see page 1.95.1.

Standard executions		
Version	Symbol	Type
Non magnetic	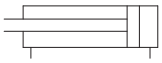	MD
Magnetic	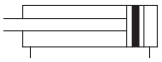	MDM
Magnetic with cushionings from bore 16 to 25 mm	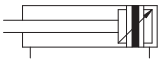	MDMA

On request, they can be supplied according Directive 94/9/EC - **ATEX**
CE Ex II 2 GDc T5

Options		Suffix
Through rod	from bore 16 to 25 mm.	P
Seals FKM	max 150 °C	V
Extended rod in hardened and chrome plated steel suitable for piston rod brake	from bore 12 to 25 mm.	B
Special versions on request		/ S

The options can be combined one another (when this is possible)



Series of cylinders conforming to ISO 6432 standards
The heads are connected with the body through rolling; this guarantees perfect fit.
The cushionings are in nitrile rubber to relieve the impact of the piston; the MDMA type is provided with adjustable air cushioning at both ends.
The standard cylinders are provided with head and rod nut.
One or more magnetic reed switches can be applied to the magnetic type.
For the magnetic reed switches type ASV see from page 1.110.1
For mounting accessories see from page 1.95.1.
For rod accessories see from page 1.85.1.
For dimensions of the cylinder with the piston-rod brake see page 1.75.5.

How to order: 25 / 50 MDMP

25	/	50	MDM	P
Bore	/	Stroke	Type	Option

Technical data	
Fluid	Compressed filtered air with or without lubrication. Lubrication, if be used, must be continous.
Pressure	max 10 bar
Temperature range	-30 °C ÷ + 80°C
Materials	Heads: Anodised aluminium Tube: Stainless steel AISI 304 Rod: Stainless steel AISI 303 Seals: Polyurethane - Brass piston

Bore (mm)	Standard strokes (mm)	Max stroke (mm)	Cushion length (mm)
8	10, 25, 50, 80 100, 125, 160 200, 250, 320, 400, 500	200	–
10		200	–
12		320	–
16		1000	16
20		1000	17
25		1000	20

The MDMA type can only be supplied with bores 16, 20, 25; the minimum stroke is 25 mm.
See page 1.1.3 to calculate the cylinder force.
Seal kits not available for these cylinders.

Type: **MD-MDM**

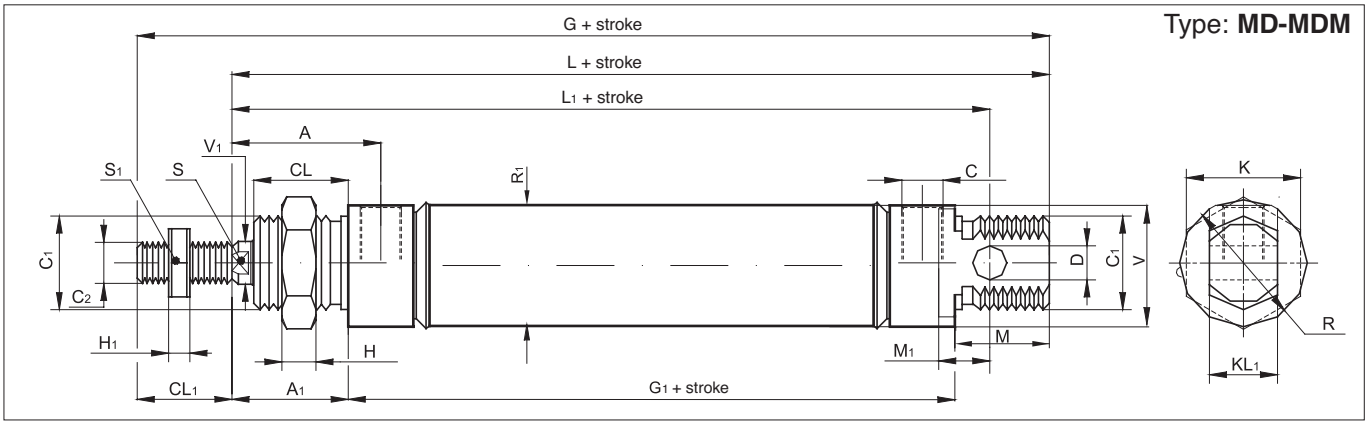

ø mm	C2	V1	C1	R	KL1	R1	V	D	CL1	L1	L	M	G1	A1	CL	A	M1	S	C	G	K	H	H1	S1
8	M4	4	M12x1,25	16	8	9,27	15	4	12	64	74	12	46	16	12	21	6	/	M5	86	19	6	2	7
10	M4	4	M12x1,25	16	8	11,27	15	4	12	64	74	12	46	16	12	21	6	/	M5	86	19	6	2	7
12	M6	6	M16x1,5	21	12	13,27	19	6	16	75	89	16	51	22	16	27	9	5	M5	105	19	5	3	12
16	M6	6	M16x1,5	21	12	17,27	19	6	16	82	96	16	58	22	16	27	9	5	M5	112	19	5	3	12
20	M8	8	M22x1,5	30	16	21,27	28,5	8	20	95	105	22	59	24	18	31,5	12	7	1/8”	125	27	8	4	14
25	M10x1,25	10	M22x1,5	30	16	26,5	28,5	8	22	104	114	22	64	28	20	36	12	9	1/8”	136	27	8	6	17

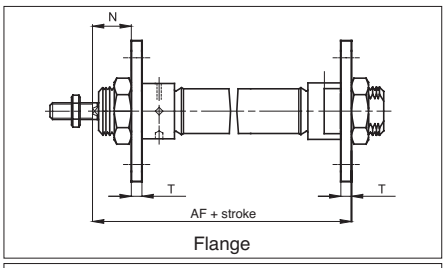

Flange

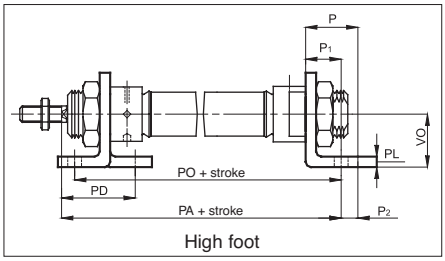

High foot

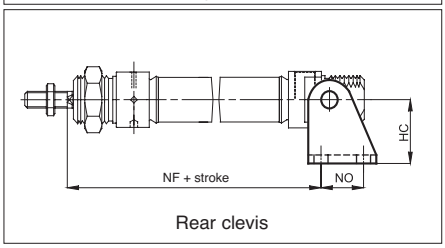

Rear clevis

Type: **MDP-MDMP**

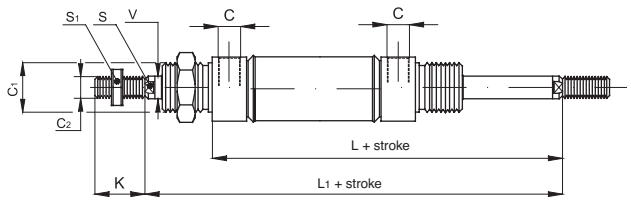

ø mm	L	L1	C	C1	C2	S	S1	V	K
8	62	78	M5	M12x1,25	M4	/	7	4	12
10	62	78	M5	M12x1,25	M4	/	7	4	12
12	73	95	M5	M16x1,5	M6	5	12	6	16
16	80	102	M5	M16x1,5	M6	5	12	6	16
20	83	107	1/8”	M22x1,5	M8	7	14	8	20
25	92	120	1/8”	M22x1,5	M10x1,25	9	17	10	22

ø mm	AF	HC	P	P1	P2	PA	PD	PL	PO	T	VO	N	NF	NO
8	65	24	16	11	5	73	24	3	68	3	16	13	62,5	12,5
10	65	24	16	11	5	73	24	3	68	3	16	13	62,5	12,5
12	77	27	20	14	6	87	32	4	79	4	20	18	73	15
16	84	27	20	14	6	94	32	4	86	4	20	18	80	15
20	88	30	25	17	8	100	36	5	93	5	25	19	91	20
25	97	30	25	17	8	109	40	5	98	5	25	23	100	20

For dimensions and codes of the accessories see page 1.95.1

Type: **MDMA**

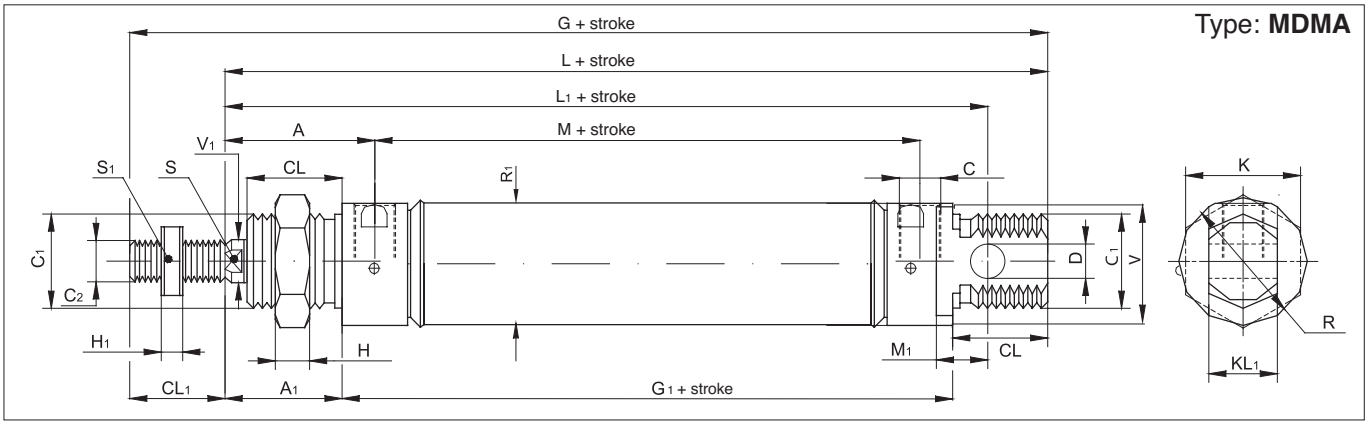

ø mm	C_2	V_1	C_1	R	KL_1	R_1	V	D	CL_1	L_1	L	M	G_1	A_1	CL	A	M_1	S	C	G	K	H	H_1	S_1
16	M6	6	M16x1,5	21	12	17,27	18	6	16	82	93	18	53	22	18	27	9	5	M5	109	22	5	3	10
20	M8	8	M22x1,5	30	16	21,27	28,5	8	20	95	105	22	59	24	18	31,5	12	7	1/8”	125	27	8	4	14
25	M10x1,25	10	M22x1,5	30	16	26,5	28,5	8	22	104	114	22	64	28	20	36	12	9	1/8”	136	27	8	6	17

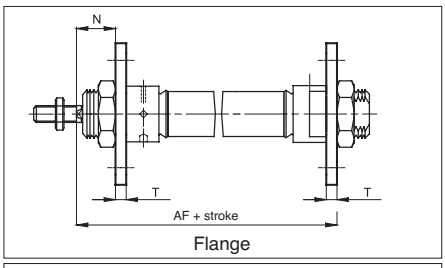

Flange

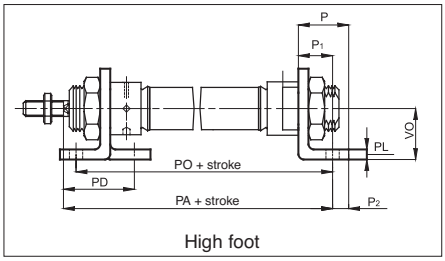

High foot

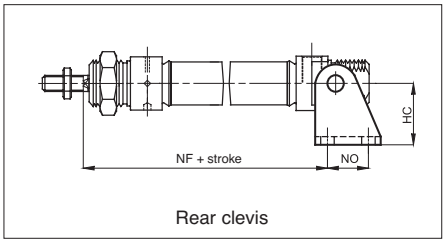

Rear clevis

Type: **MDMAP**

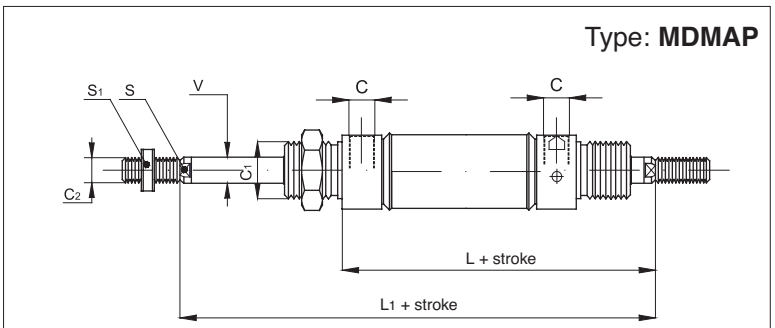

ø mm	L	L_1	C	C_1	C_2	S	S_1	V
16	76	97	M5	M16x1.5	M6	5	10	6
20	83	107	1/8”	M22x1.5	M8	7	14	8
25	92	120	1/8”	M22x1.5	M10x1,25	9	17	10

ø mm	AF	HC	P	P_1	P_2	PA	PD	PL	PO	T	VO	N	NF	NO
16	82	27	20	14	6	92	32	4	84	4	20	18	80	15
20	88	30	25	17	8	100	36	5	93	5	25	19	91	20
25	97	30	25	17	8	109	40	5	98	5	25	23	100	20

For dimensions and codes of the accessories see page 1.95.1

Notes

GENERAL INDEX CILINDERS INDEX

Standard executions			
Version	Shape of barrel	Symbol	Type
MAGNETIC STANDARD	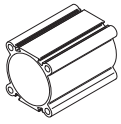	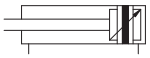	AMA
	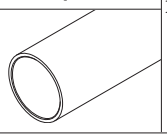		AMT

For the magnetic reed switches type ASV see from page 1.110.1.
For coupling cylinders/reed swiches/brackets see table on page 1.120.5
For mounting accessories see from page 1.97.1.
For rod accessories see from page 1.85.1.
For dimensions of the cylinder with piston rod brake see page 1.75.15.

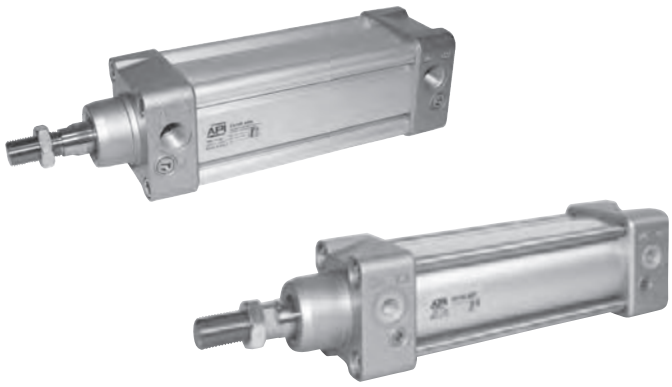

New series of cylinders conforming to DIN 6431 and VDMA 24 562 standards.
They can be supplied with two different shapes of the barrel: AMA type with grooves allowing to use the flush-mounted magnetic switch and the AMT type round with tie-rods.
The main features of this cylinder are the “clean” modern design and the attention to details.
A particular attention has been given to the manufacture of the end caps; there are no external casting cavities, thus eliminating contamination traps.

On request, they can be supplied according Directive 94/9/EC - **ATEX**
CE Ex **II 2 GDc T5**

Options	Suffix
Through rod (page 1.5.4)	P
Rod in stainless steel AISI 304	K
Extended rod in hardened and chrome plated steel for the application of the piston rod brake (page 1.5.4)	B
Seals FKM max 150°C (scraper ring only = V1)	V
Tandem forward movement piston rods coupled together (page 1.5.5)	TA1
Tandem forward movement piston rods independent (page 1.5.5)	TA2
Tandem back to back (page 1.5.5)	TA3
Tandem front to front (page 1.5.5)	TA4
Extended rod (indicate the requested WH dimension in mm. E.g.: WH -100).	WH-...
Without adjustable cushionings	D
Adjustable rear cushioning only	D1
Adjustable front cushioning only	D2
Special male thread (indicate the requested thread. E.g. : R-M 10x1,5). The dimension AM of the special thread will be the same as the standard. The cylinder will be supplied without rod nut.	R-M...
Female thread; for dimensions see page 1.5.4	F
With bellows for protection of the rod (in this case the dimension WH will be extended according the stroke of the cylinder)	Z
Low friction (type AMT only)	L
Piston rod tightness in nitrile rubber NBR	H
Special on request	/S

The options can be combined (when this is possible).
The suffix of the options are to be added to the model number of the standard product, as shown in the following table.
How to order: 63 / 100 AMAKVR-M12x1,25

63	/	100	AMA	K	V	R-M12X1,25
Bore	/	Stroke	Type	Option	Option	Option

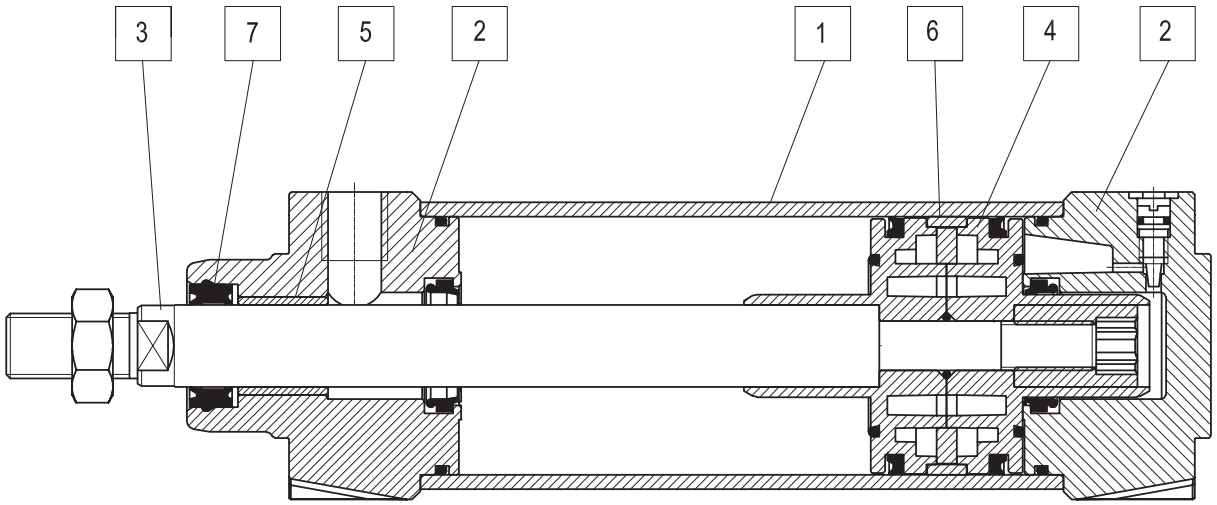

Materials (standard types)	
1 Tube	Anodised aluminium
2 Heads	Die-cast painted aluminium
3 Rod	Chrome-plated steel C45
4 Piston	Die-cast aluminium
5 Bushing	Self-lubricating sintered bronze
6 Guide ring	Natural Delrin
7 Rod seals	Polyurethane
Other seals	Nitrile rubber NBR/polyurethane

Technical data								
Bore (mm)		32	40	50	63	80	100	125
Fluid		Compressed filtered air with or without lubrication. Lubrication, if be used, must be continous.						
Pressure range		0,5 ÷ 10 bar						
Temperature range		-20 °C ÷ +80 °C						
Stroke		from 10 mm to 2500 mm						
Cushion lenght		20	22	25	25	35	35	35
Ports		1/8”	1/4”		3/8”		1/2”	
Rod thread		M10 x 1,25	M12 x 1,25	M16 x 1,5		M20 x 1,5		M27 x 2
Weight	Stroke zero (g)							
	Additional 10 mm stroke (g)							

type: **AMA**

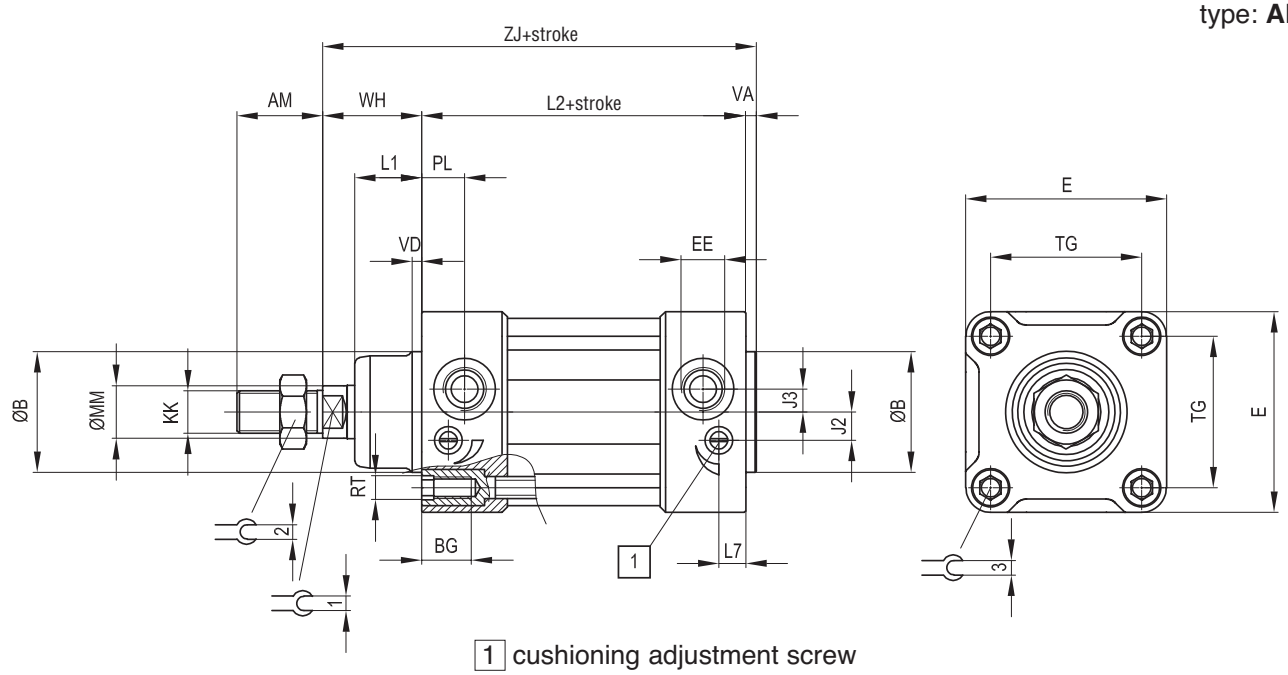

1 cushioning adjustment screw

Ø (mm)	AM	B Ø d11	BG	E	EE	J2	J3	KK	L1	L2
32	22	30	16	47	G1/8	6	5	M10x1,25	20	94
40	24	35	16	52	G1/4	8	6	M12x1,25	22	105
50	32	40	16	65	G1/4	10,5	6	M16x1,5	26	106
63	32	45	16	75	G3/8	10,5	8,5	M16x1,5	25	121
80	40	45	17	95	G3/8	14	9,5	M20x1,5	32	128
100	40	55	17	115	G1/2	15	10	M20x1,5	38	138
125	54	60	20	140	G1/2	20	10	M27x2	40	160

Ø (mm)	L7	MM Ø f7	PL	RT	TG	VA	VD	WH	ZJ	1	2	3
32	18	12	14	M6	32,5	4	4	26	124	10	17	6
40	20	16	15	M6	38	4	4	30	139	13	19	6
50	20	20	15	M8	46,5	4	4	37	147	17	24	8
63	10	20	16	M8	56,5	4	4	37	162	17	24	8
80	13,5	25	20,5	M10	72	4	4	46	178	22	30	10
100	13	25	20	M10	89	4	4	51	193	22	30	10
125	33	32	27	M12	110	5	5	65	230	27	41	12

Seal kits	
n. 1	Rod seal
n. 2	Cushioning seal
n. 2	Piston lip-seal
n. 1	Linear rubber ring for piston (damper)
n. 2	Tube O-ring
n. 1	Piston guiding ring
n. 2	O-ring for cushioning screw
n. 1	O-ring to seal two semi-pistons

How to order: 63 / SG / AM

63	/	SG	/	AM
Bore	/	Seal kit	/	Type

GENERAL INDEX CILINDERS INDEX

type: **...P**

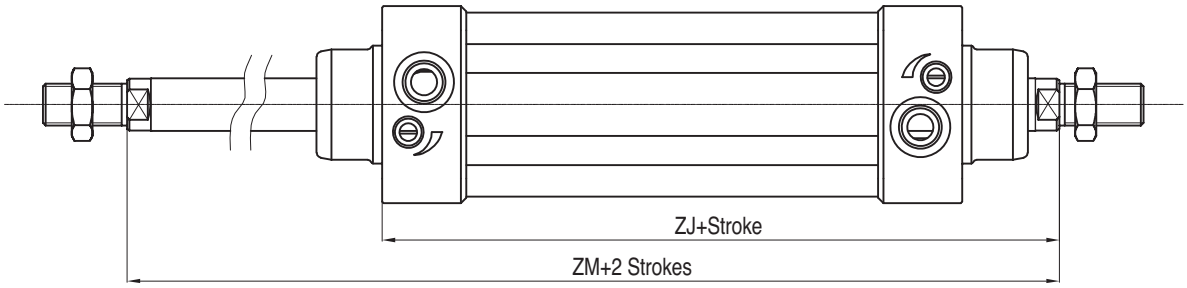

type: **...B**

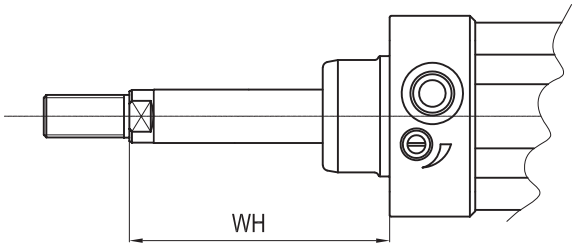

type: **...F**

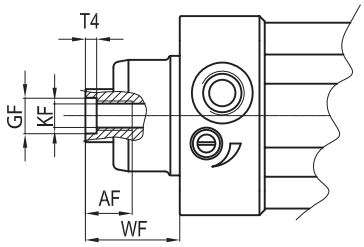

Ø mm	AF	GF	KF	T4	WF	WH	ZJ	ZM
32	12	8	M6	2,6	26	74	120	146
40	12	10	M8	3,3	30	85	135	165
50	16	12	M10	4,7	37	107	143	180
63	16	12	M10	4,7	37	107	158	195
80	20	14	M12	6,1	46	136	174	220
100	20	14	M12	6,1	51	143	189	240
125	32	18	M16	8	65	187	225	290

type: **...TA1**

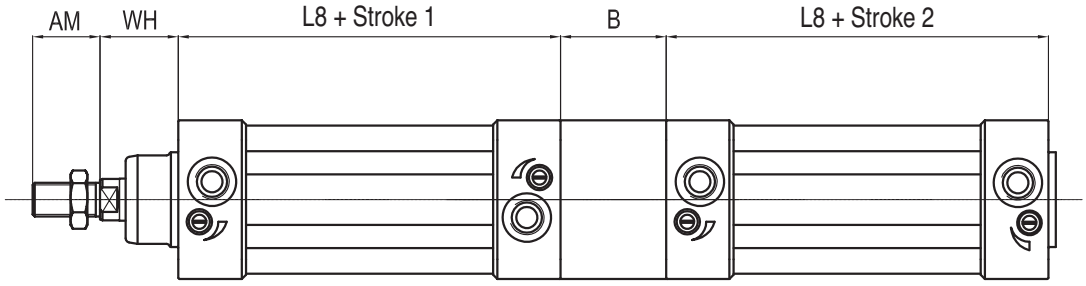

type: **...TA2**

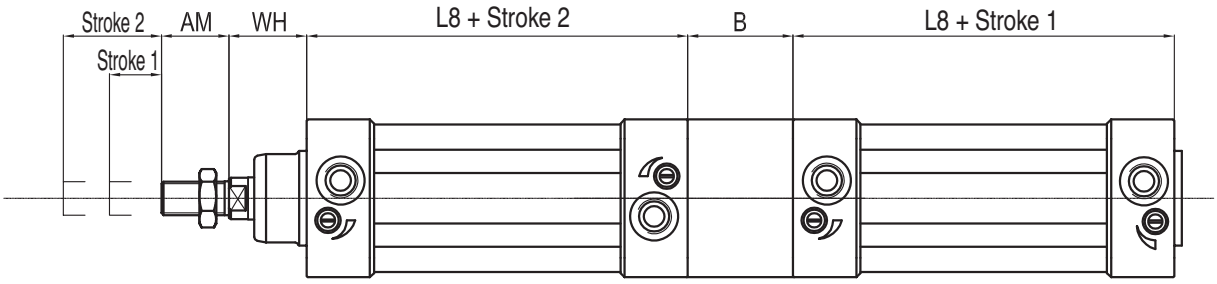

type: **...TA3**

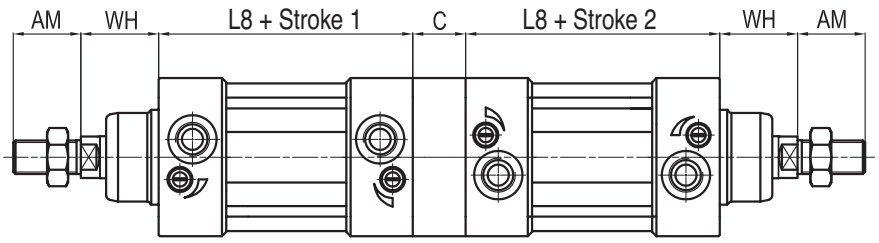

type: **...TA4**

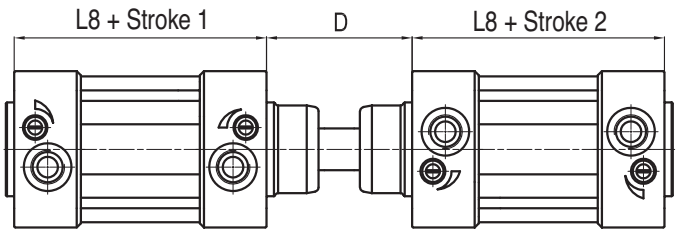

Ø mm	AM	B	C	D	L8	WH
32	22	40	12	48	94	26
40	24	44	12	54	105	30
50	32	52	16	69	106	37
63	32	50	16	69	121	37
80	40	64	20	86	128	46
100	40	76	20	91	138	51
125	54	80	35	120	160	65

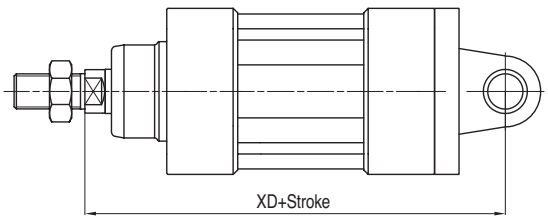

Rear clevis/eye

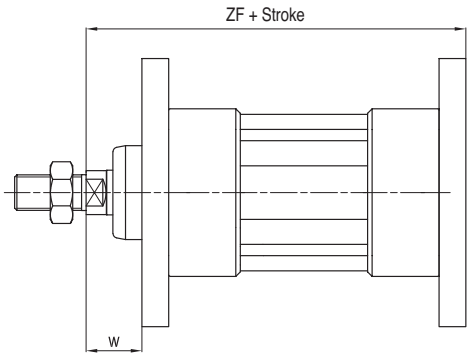

Flange

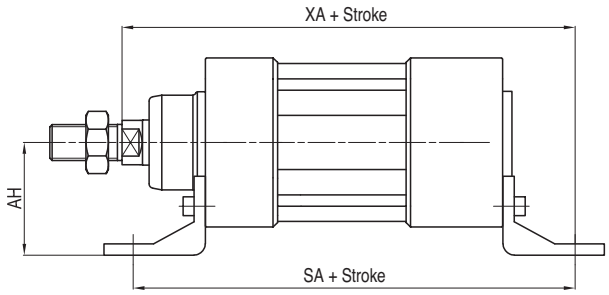

Feet

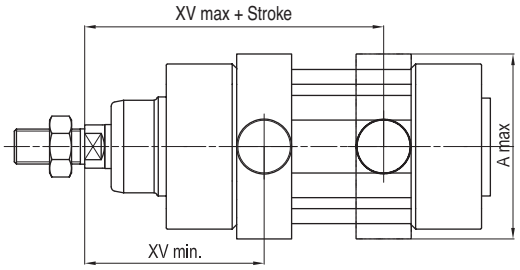

Centre trunnion

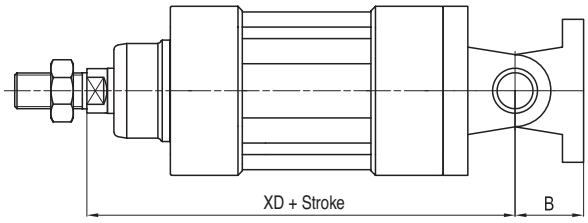

Rear standard hinge

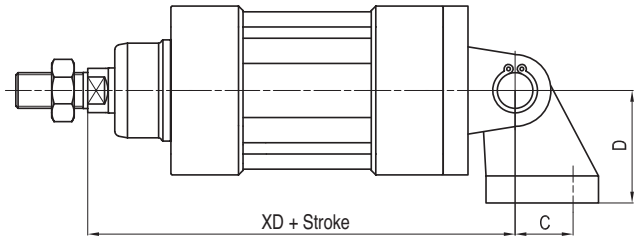

Rear 90° hinge

Ø mm	A max	AH	B	C	D	SA	W	XA	XD	XV min	XV max	ZF
32	70	32	22	21	32	142	16	144	142	60	86	130
40	78	36	25	24	36	161	20	163	160	69	96	145
50	91	45	27	33	45	170	25	175	170	78	102	155
63	94	50	32	37	50	185	25	190	190	82	113	170
80	130	63	36	47	63	210	30	215	210	97	123	190
100	145	71	41	55	71	220	35	230	230	107	133	205
125	170	90	50	70	90	250	45	270	275	126,5	163,5	245

For dimensions and codes of the accessories: see page 1.97.1

Standard executions		
Version	Symbol	Type
MAGNETIC STANDARD	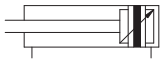	AMT

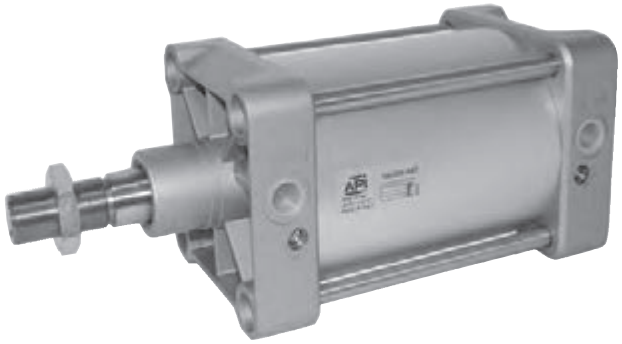

For the magnetic reed switches type ASV see from page 1.110.1.
For coupling cylinders/reed swiches/brackets see table on page 1.120.5
For mounting accessories see from page 1.97.1.
For rod accessories see from page 1.85.1.

On request, they can be supplied according Directive 94/9/EC - **ATEX**
CE Ex II 2 GDc T5

New series of cylinders conforming to DIN 6431 and VDMA 24 562 standards.
External tie-rods and round anodised aluminium tube.
The main features of this cylinder are the modern design and the attention to details.

Options	Sigla
Through rod (page 1.5.4)	P
Rod in stainless steel AISI 304	K
Seals FKM max 150°C (scraper ring only = V1)	V
Tandem forward movement piston rods coupled together (page 1.5.5)	TA1
Tandem forward movement piston rods independent (page 1.5.5)	TA2
Tandem back to back (page 1.5.5)	TA3
Tandem front to front (page 1.5.5)	TA4
Extended rod (indicate the requested WH dimension in mm. E.g.: WH -100).	WH-...
Without adjustable cushionings	D
Adjustable rear cushioning only	D1
Adjustable front cushioning only	D2
Special male thread (indicate the requested thread. E.g. : R-M 10x1,5). The dimension AM of the special thread will be the same as the standard. The cylinder will be supplied without rod nut.	R-M...
Female thread; for dimensions see page 1.5.4	F
With bellows for protection of the rod (in this case the dimension WH will be extended according the stroke of the cylinder)	Z
Piston rod tightness in nitrile rubber NBR	H
Special on request	/S

The options can be combined (when this is possible).
The suffix of the options are to be added to the model number of the standard product, as shown in the following table.
How to order: 160 / 100 AMTKVR-M20x1,5

160	/	100	AMT	K	V	R-M20x1,5
Bore	/	Stroke	Type	Option	Option	Option

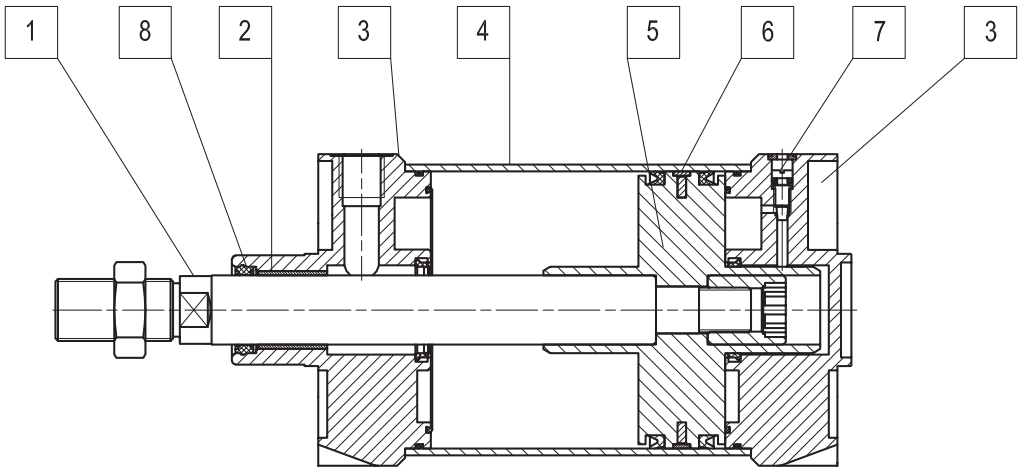

Materials (standard types)	
1 Rod	Chrome-plated steel C45
2 Bushing	Self-lubricating sintered bronze
3 Heads	Die-cast painted aluminium
4 Tube	Anodised aluminium
5 Piston	Die-cast aluminium
6 Guide ring	Natural Delrin
7 Cushioning adjustment screw	Stainless steel AISI 303
8 Rod seals	Polyurethane
Other seals	Nitrile rubber NBR/polyurethane

Technical data					
Bore (mm)		160	200	250	320
Fluid		Compressed filtered air with or without lubrication. Lubrication, if be used, must be continous.			
Pressione d'esercizio		0,5 ÷ 10 bar			
Temperature range		-20 °C ÷ +80 °C			
Stroke		from 10 mm to 2500 mm			
Cushion lenght					
Ports		3/4"		1"	
Rod thread		M36 x 2		M42 x 2	M48 x 2
Weight	Stroke zero (g)				
	Addizional 10 mm stroke (g				

GENERAL INDEX CILINDERS INDEX

type: **AMT**

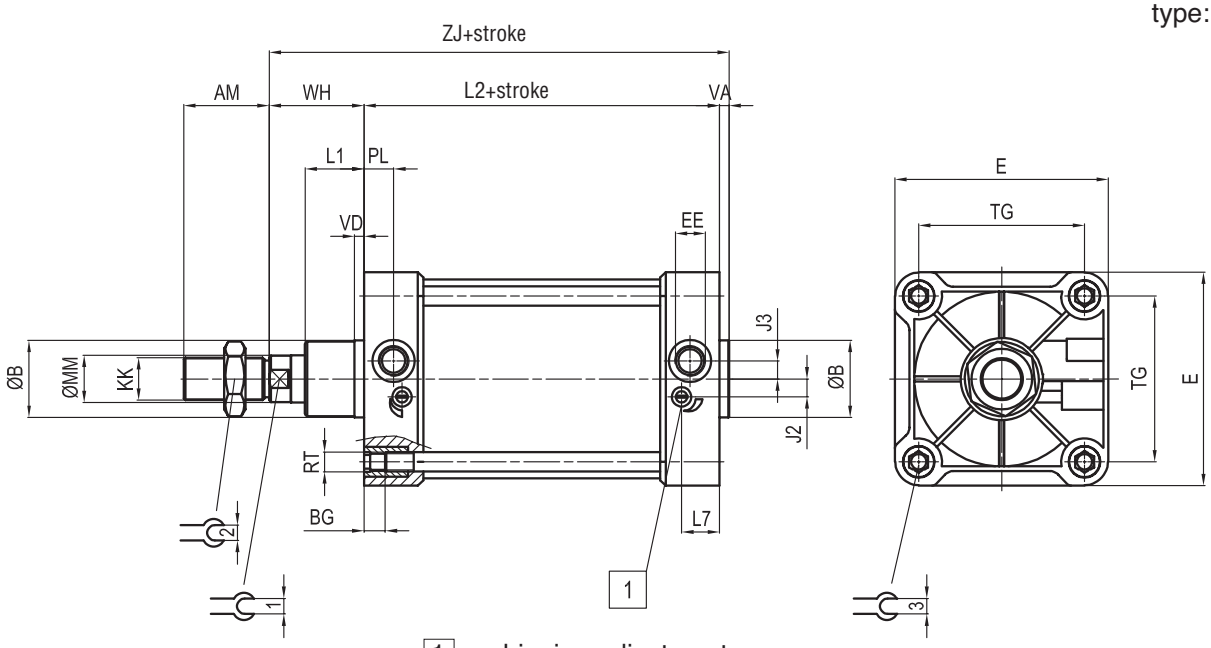

1 cushioning adjustment screw

Ø (mm)	AM	B Ø d11	BG	E	EE	J2	J3	KK	L1	L2
160	72	65	20	180	G 3/4	15	15	M36x2	50	180
200	72	75	20	220	G 3/4	15	15	M36x2	65	180
250	84	90	25	270	G 1	25	25	M42x2	75	200
320	96	110	30	350	G 1	35	35	M48x2	90	220

Ø (mm)	L7	MM Ø f7	PL	RT	TG	VA	VD	WH	ZJ	1	2	3
160	32	40	25	M16	140	8	8	80	268	36	55	16
200	34	40	25	M16	175	8	25	95	283	36	55	16
250	40	50	30	M20	220	8	25	105	313	46	65	20
320	45	63	30	M24	270	10	25	120	350	55	75	24

Seal kits	
n. 1	Rod seal
n. 2	Cushioning seal
n. 2	Piston lip-seal
n. 1	Linear rubber ring for piston (damper)
n. 2	Tube O-ring
n. 1	Piston guiding ring
n. 2	O-ring for cushioning screw
n. 1	O-ring to seal two semi-pistons

How to order: 200 / SG / AM

200	/	SG	/	AM
Bore	/	Seal kit	/	Type

type: **...P**

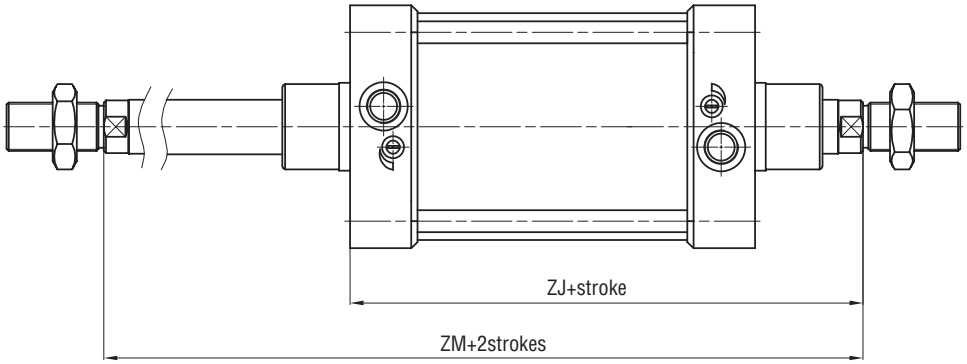

type: **...F**

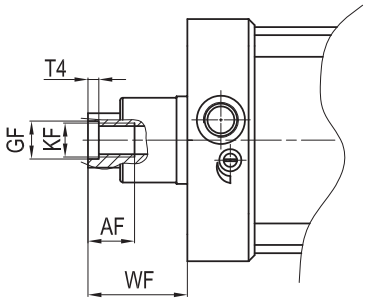

Ø mm	AF	KF	T4	WF	GF	ZJ	ZM
160	36	M20	10	80	22	260	340
200	36	M20	10	95	22	275	370
250	40	M24	12	105	26	305	410
320	50	M30	15	120	32	340	460

type: **...TA1**

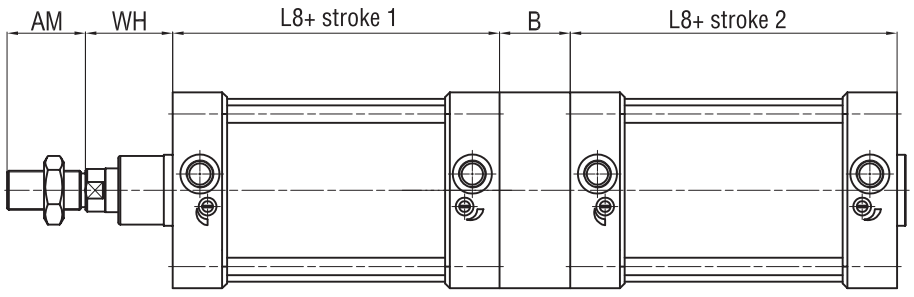

type: **...TA2**

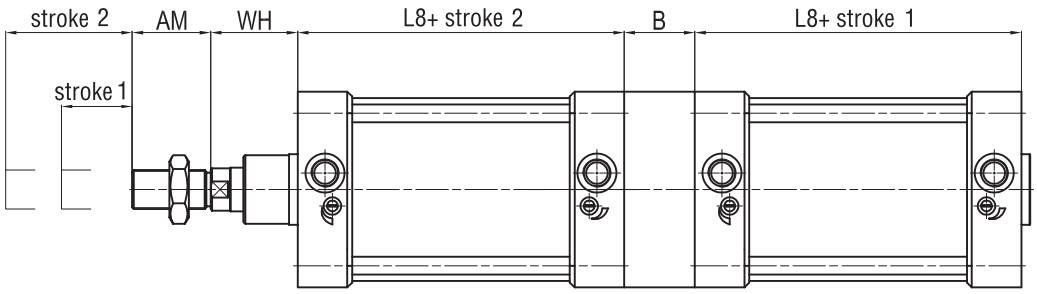

type: **...TA3**

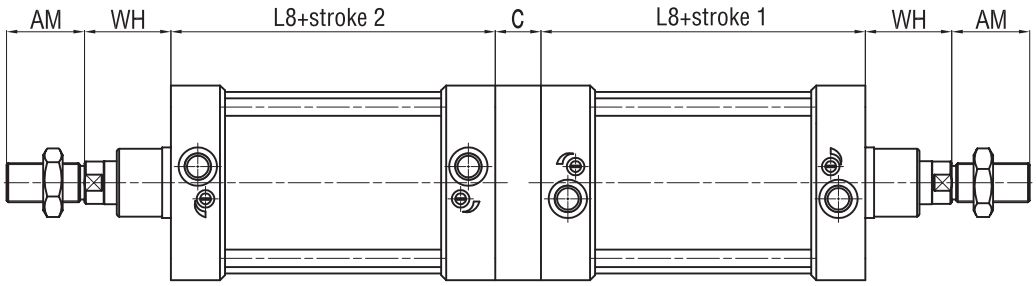

type: **...TA4**

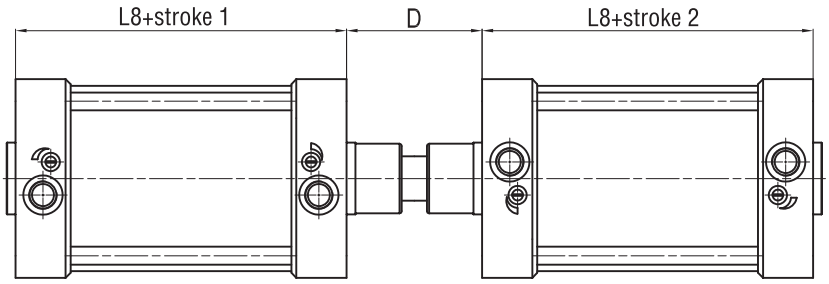

Ø mm	AM	B	C	D	L8	WH
160	72	100	50	152	180	80
200	72	130	50	167	180	95
250	84	150	60	180	200	105
320	96	180	70	200	220	120

GENERAL INDEX CILINDERS INDEX

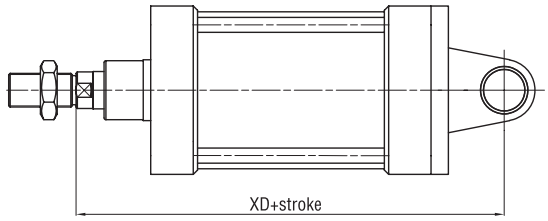

Rear clevis/eye

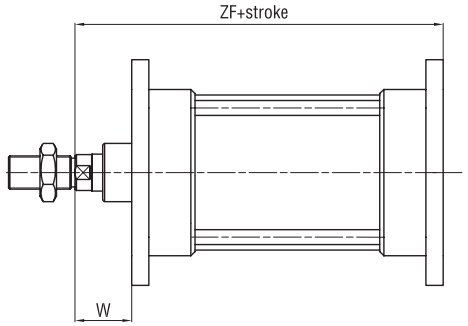

Flange

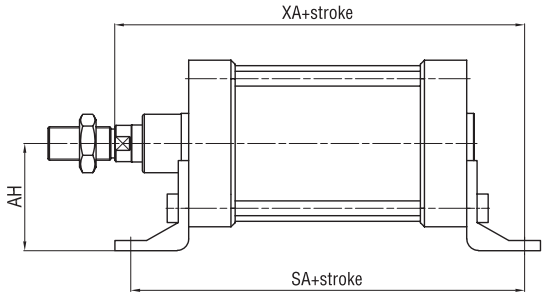

Feet

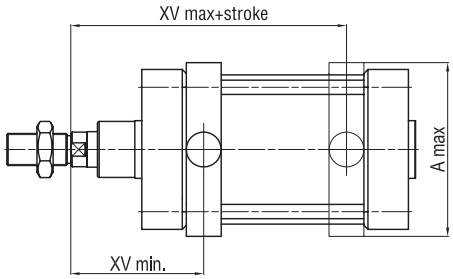

Centre trunnion

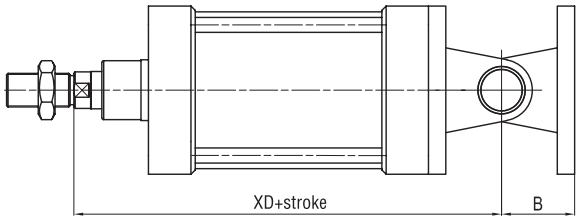

Rear standard hinge

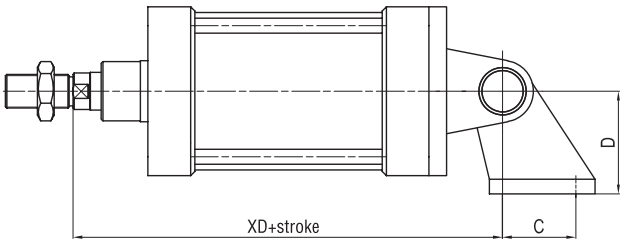

Rear 90° hinge

Ø mm	A max	AH	B	C	D	SA	W	XA	XD	XV min	XV max	ZF
160	190	115	55	88	115	300	60	320	315	150	190	280
200	240	135	60	90	135	320	70	345	335	165	205	300
250	296	165	70	110	165	350	80	380	375	185	225	330
320	380	200	80	122	200	390	90	425	420	207	253	370

Standard executions		
Version	Symbol	Type
Double acting	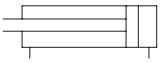	RED
Double acting magnetic	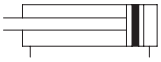	REDM

On request, they can be supplied according Directive 94/9/EC - **ATEX**
CE Ex **II 2 GDc T5**



Series of cylinders not conforming to standards
The heads are connected with the body through thread; this guarantees perfect fit.
The cushionings are in nitrile rubber to relieve the impact of the piston.
The standard cylinders are provided with rod nut.
One or more magnetic reed switches can be applied to the magnetic type.
For the magnetic reed switches type ASV see from page 1.110.1.
For mounting accessories see from page 1.11.3.
For rod accessories see from page 1.85.5.

Options		Suffix
Through rod		P
Seals FKM	max 150 °C	V
Special versions on request		/ S

The options can be combined (when this is possible)

How to order: 40 / 50 REDMP

40	/	50	REDM	P
Bore	/	Stroke	Type	Option

Technical data	
Fluid	Compressed filtered air with or without lubrication. Lubrication, if be used, must be continous.
Pressure	max 10 bar
Temperature range	-20 °C ÷ + 80°C
Materials	Heads: Anodised aluminium Barrel: Anodised aluminium Rod: Chrome-plated C 45 steel Seals: poliuretano - NBR

Bore (mm)	Standard strokes (mm)	Max stroke (mm)
32	25, 50, 80,100, 125, 160, 200, 250, 320, 400, 500	1000
40		
50		

See page 1.1.3 to calculate the double acting cylinder force.
Seal kits not available for these cylinders.

Type: **RED-REDM**

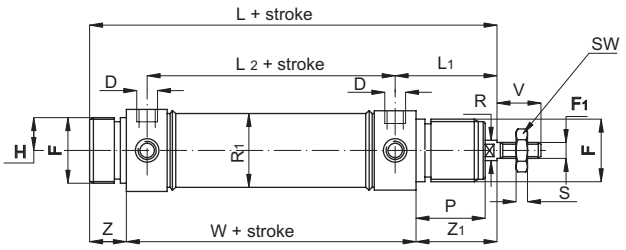

ø mm	V	F	P	D	F1	R	L2	Z	Z1	W	L1	L	R1	H	S	SW
32	20	M 30x1,5	30	1/8”	M10x1,5	12	78	14	38	96	47	148	36	17,5	6	17
40	24	M 38x1,5	35	1/4”	M12x1,75	16	89	16	45	113	57	174	45	21	7	19
50	32	M 45x1,5	38	1/4”	M16x2	20	96	18	50	120	62	188	55	26,5	8	24

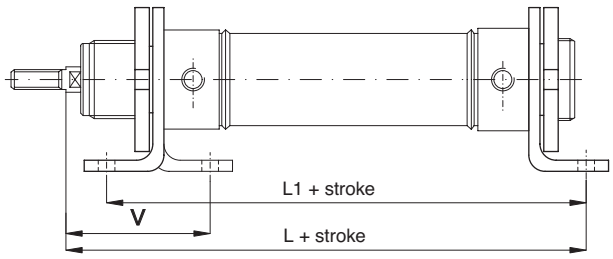

High foot

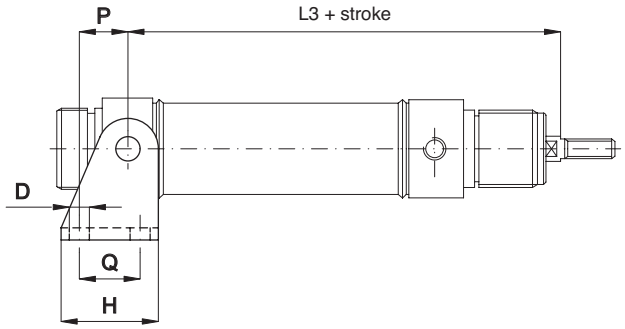

Rear clevis

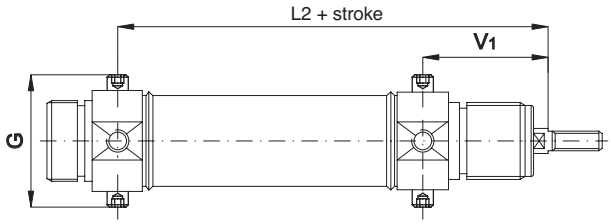

Pivot

ø mm	L	L1	L2	L3	V	V1	P	H	Q	G	D
32	148	124	125	125	48	47	20	40	24	51	7
40	178	153	146	146	60	57	27	50	30	61	9
50	190	160	158	158	64	62	30	54	34	75	9

Rear clevis
Type: **CF..AQM**



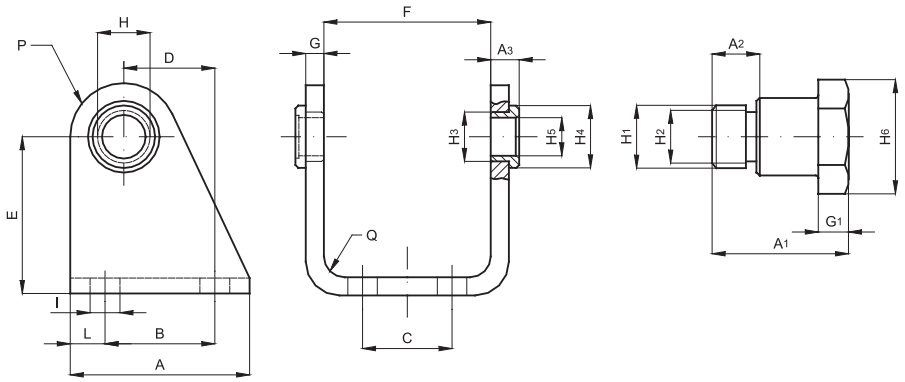

Material: Zinc plated steel
The standard rear clevis is provided with two pins.

Code	Item	ø mm	A	A_1	A_2	A_3	B	C	D	E	F	G	G_1	H	H_1	H_2	H_3	H_4	H_5	H_6	I	L	P	Q
040058	CF32AQM	32	40	18	6	6	24	20	20	35	38,1	4	4	12	10	M8x1	12	15	10	13	7	8	12	4
040059	CF40AQM	40	50	21,6	7	7	30	28	27	40	46,1	5	5	15	12	M10x1	15	20	12	17	9	10	13	5
040060	CF50AQM	50	54	26,4	9	8,5	34	36	30	45	57,1	6	6	18	14	M12x1,5	18	23	14	19	9	10	14	6

Heads nut
Type: **GH..AQM**

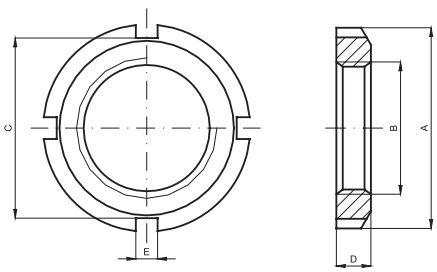

Material: Zinc plated steel

Code	Item	ø mm	A	B	C	D	E
040066	GH32AQM	32	ø 45	M30x1,5	40	7	5
040067	GH40AQM	40	ø 50	M38x1,5	46	8	5
040068	GH50/63AQM	50	ø 58	M45x1,5	53	9	6

High foot/Flange
Type: **P..AQM**

STEEL

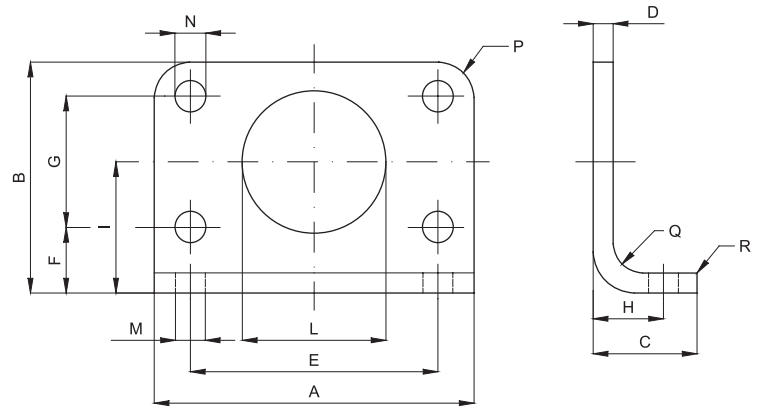

Material: Zinc plated steel

Code	Item	ø mm	A	B	C	D	E	F	G	H	I	L	M	N	P	Q	R
040054	P32AQM	32	66	49	21	4	52	14	28	14	28	30	7	7	7	4	2
040055	P40AQM	40	80	58	30	5	60	18	30	20	33	38	9	9	10	5	2
040056	P50AQM	50	90	70	30	6	70	20	40	20	40	45	9	9	10	6	2

Pin
Type: **SEC..AQM**

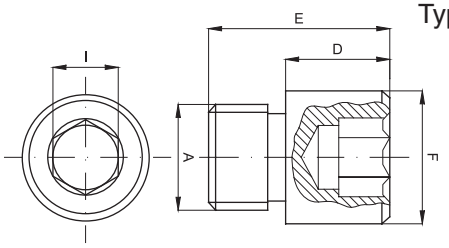

Material: Zinc plated steel
The kit is provided with two pins.

Code	Item	ø mm	A	D	E	F	I
040062	SEC32AQM	32	M8x1	8	14	ø 10	5
040063	SEC40AQM	40	M10x1	9,5	15,5	ø 12	6
040064	SEC50AQM	50	M12x1,5	11	20	ø 14	6

Standard executions		
Version	Symbol	Type
Non magnetic	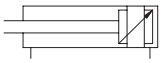	CX

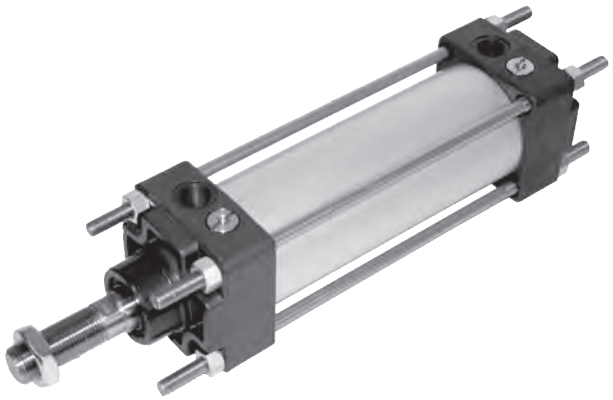

Options		Suffix
Magnetic	(for reed switches ASV see page 1.110.1)	M
Through rod		P
Seals FKM	max 150 °C	V
Rod in stainless steel AISI 304		K
Special versions on request		/ S

The options can be combined (when this is possible)

Series of cylinders conforming to CNOMO, 06.07.00.
They are provided with a round barrel and external tie rods for the bores from 32 to 200 mm.
The standard cylinders are provided with adjustable cushionings at both ends.
For mounting accessories see from page 1.99.1
For rod accessories see from page 1.85.10.

How to order: 50 / 200 CXM

50	/	200	CX	M
Bore	/	Stroke	Type	Option

Technical data	
Fluid	Compressed filtered air with or without lubrication. Lubrication, if be used, must be continous.
Pressure range	1 ÷ 10 bar
Temperature range	-20 °C ÷ + 80°C
Materials	Heads: Anodised aluminium Barrel: Anodised aluminium Rod and tie rods: Chrome-plated C 45 steel Seals: NBR - Piston: monobloc

Bore (mm)	Standard strokes (mm)	Max stroke (mm)	Cushion length (mm)
32	25, 50, 75, 100 125, 150, 200, 250, 300, 350, 400, 500	2500	18
40			24
50			24
63			29
80			29
100			27
125			27
160			40
200			40

See page 1.1.3 to calculate the cylinder force.

Materials

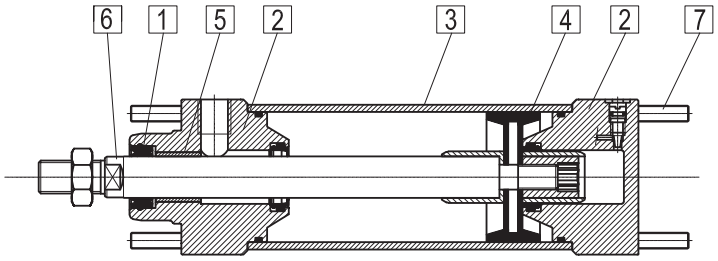

N.	Component	Material
1	Piston rod seal	NBR
2	Heads	Black anodised aluminium
3	Tube	Anodised aluminium
4	Piston	Monobloc NBR
5	Bushing	Sintered bronze
6	Piston rod	Chrome-plated steel C45
7	Tie rods	Chrome-plated steel C45

type: **CX - CXM**

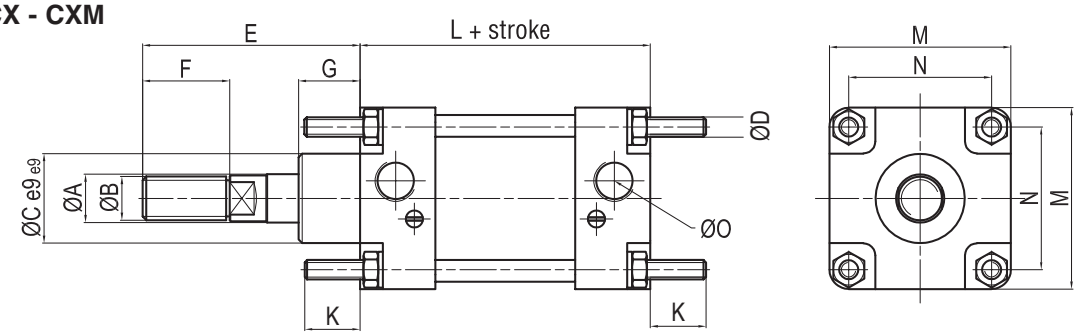

Ø (mm)	Ø A	Ø B	Ø C^{e9}	Ø D	E	F	G	K	L	M	N	O
32	12	M 10x1,5	25	M6	45	20	15	17	80	45	33	1/8”
40	18	M 16x1,5	32	M6	70	36	18	17	110	52	40	1/4”
50	18	M 16x1,5	32	M8	70	36	20	23	110	65	49	1/4”
63	22	M 20x1,5	45	M8	85	46	22	23	125	75	59	3/8”
80	22	M 20x1,5	45	M10	85	46	26	28	125	95	75	3/8”
100	30	M 27x2	55	M10	110	63	20	28	145	115	90	1/2”
125	30	M 27x2	55	M12	110	63	20	34	145	140	110	1/2”
160	40	M 36x2	65	M16	135	85	28	42	180	180	140	3/4”
200	40	M 36x2	65	M16	135	85	28	42	180	220	175	3/4”

type:: **CXP - CXMP**

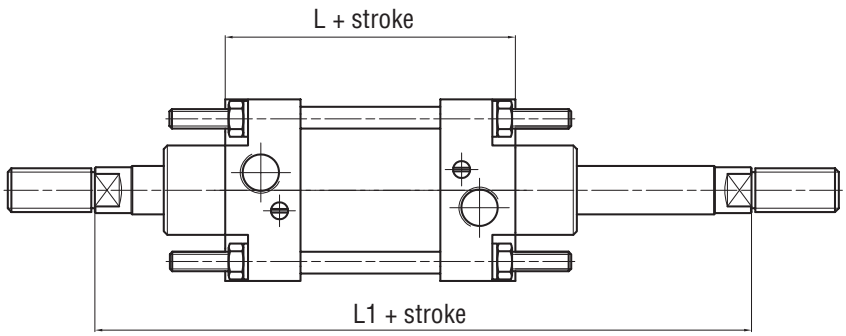

Ø (mm)	L	L1
32	90	140
40	129	147
50	129	197
63	145	221
80	143	221
100	164	250
125	164	258
160	200	300
200	200	300

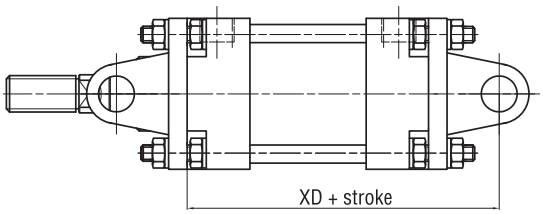

Rear clevis/eye

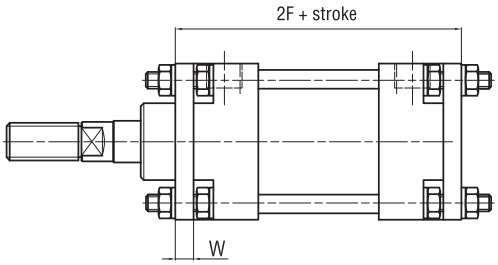

Flange

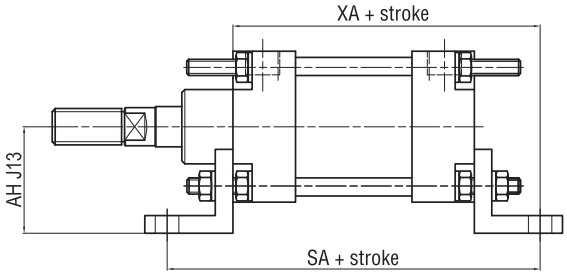

Feet

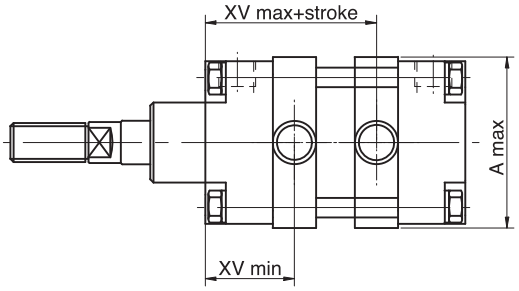

Centre trunnion

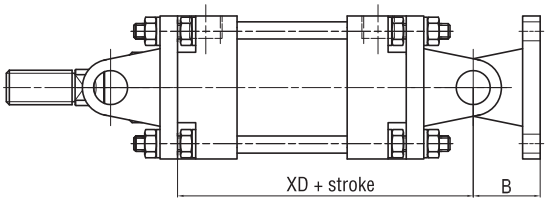

Rear standard hinge

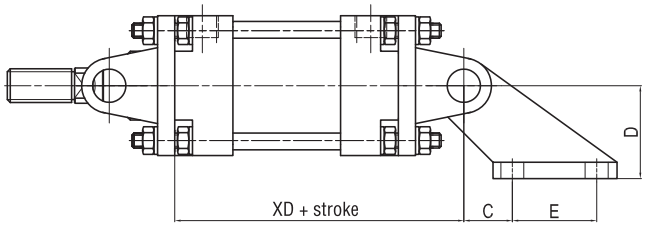

Rear 90° hinge

Ø mm	A max	AH	B	C	D	E	SA	W	XA	XD	XV min	XV max	2F
32	46	32	18	18	32	20	134	8	107	98	32,5	47,5	96
40	58	36	26	25	45	32	164	8	137	134	41	69	126
50	68	45	26	25	45	32	180	10	145	138	45	65	130
63	84	45	34	32	63	50	195	10	160	155	52,5	72,5	145
80	102	63	34	32	63	50	211	12	168	157	52,5	72,5	149
100	124	73	41	40	90	70	231	12	188	182	57	88	169
125	152	91	41	40	90	70	249	15	197	186	58	87	175
160	190	115	55	50	140	110	304	20	242	235	67	113	220
200	250	135	55	50	140	110	304	20	242	235	68	112	220

For dimensions and codes of the accessories see page 1.99.1.

Notes

1

Standard executions		
Version	Symbol	Type
Magnetic	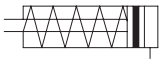	CS

On request, they can be supplied according Directive 94/9/EC - **ATEX**
II 2 GDc T5

Options		Suffix
Rear spring		T
Seals FKM	max 150 °C	V
Piston rod with male thread		M
. Special versions on request		/ S

The options can be combined (when this is possible).



Series of compact cylinders conforming to European UNITOP standards.
The new barrel has grooves allowing the mounting of the magnetic reed switch directly onto the barrel itself without further brackets; this allows the magnetic sensor not to protrude beyond the profile of the barrel.
Elastic cushioning are mounted on the piston.
Only in the version with magnetic piston.
One or more magnetic sensors can be applied.
For the magnetic reed switches type ASV see from page 1.110.1
For mounting accessories see from page 1.100.1.
For rod accessories see from page 1.85.1

How to order: 32 / 50 CST

32	/	50	CS	T
Bore	/	Stroke	Type	Option

On request this series of cylinders can also be supplied with the mounting hole dimensions conforming to ISO 6431 standards, from bore 32 to 100 mm: type CSI.

For accessories see from page 1.97.1.

Technical data	
Fluid	Compressed filtered air with or without lubrication. Lubrication, if be used, must be continous.
Pressure range	2 ÷ 10 bar
Temperature range	-30 °C ÷ + 80°C
Materials	Heads: Anodised aluminium Barrel: Anodised aluminium Rod: Stainless steel AISI 303 Seals: Polyurethane - Aluminium piston

Bore (mm)	Standard strokes (mm)	Max stroke (mm)	Thrust force at 6 bar (N)	Max traction force of the spring (N)	Number of grooves for the sensors
12	5, 10, 15, 20 25, 30, 40, 50	50	59	6	3
16			110	6	
20			177	7	
25			270	12	
32			448	16	
40			700	23	
50			1125	30	7
63	10, 15, 20, 25, 30, 40, 50		1800	35	
80			2900	60	
100			4510	100	

Type: **CS**

ø 12 ÷ 25

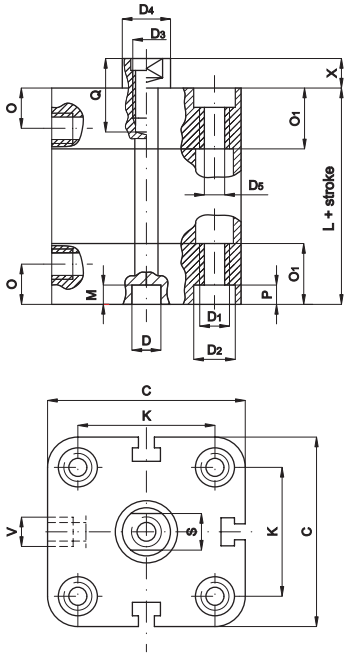

ø 32 ÷ 100

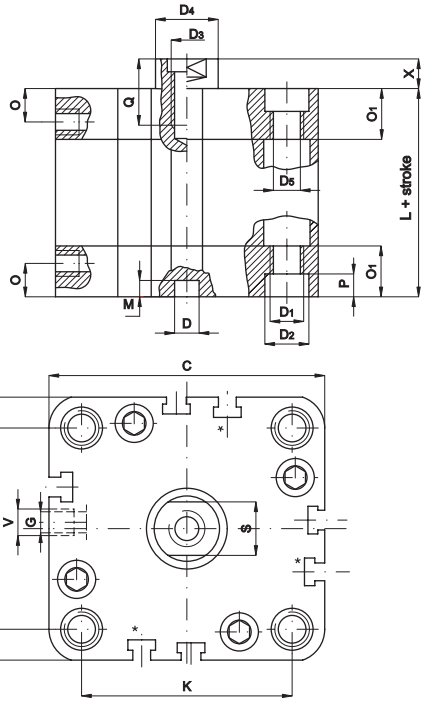

Ø mm.	C	D Ø	D_1 Ø	D_2 Ø	D_3 Ø	D_4 Ø	D_5 Ø	G	V	O	O_1	K	S	P	M	Q	X	L
12	29	6	M4	6	M3	6	3,3	0	M5	8	12,25	18	5	3,5	4	6	4,5	38
16	29	6	M4	6	M4	8	3,3	0	M5	8	12,25	18	6	3,5	4	8	4,5	38
20	36	6	M5	7,5	M5	10	4,2	0	M5	8	12,25	22	8	4,5	4	10	4,5	38
25	40	6	M5	7,5	M5	10	4,2	0	M5	8	12,75	26	8	4,5	4	10	5,5	39,5
32	50	6	M6	9	M6	12	5,2	4	1/8”	8	14,5	32	10	5,5	4	12	6	44,5
40	58	6	M6	9	M6	12	5,2	3	1/8”	8	14,75	42	10	5,5	4	12	6,5	45,5
50	67	6	M8	10,5	M8	16	6,7	0	1/8”	8	14,75	50	13	6,5	4	12	7,5	45,5
63	80	8	M10	13,5	M8	16	8,5	0	1/8”	8	14,25	62	13	8,5	4	14	7,5	50
80	100	8	M10	13,5	M10	20	8,5	0	1/8”	8,5	16	82	17	8,5	4	15	8	56
100	124	8	M10	13,5	M12	25	8,5	0	1/4”	10,5	19,25	103	22	8,5	4	20	10	66,5

*From 30 mm stroke add to above dimensions: 10 mm for Ø 12-16-20, 20 mm for Ø 25-32-40-50-63, 30 mm for Ø 80-100.

Type: **CSM**

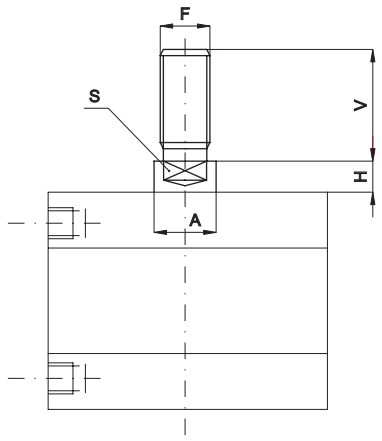

Ø mm	A	V	F	S	H
12	6	16	M6	5	4,5
16	8	20	M8	6	4,5
20	10	22	M10x1,25	8	4,5
25	10	22	M10x1,25	8	5,5
32	12	22	M10x1,25	10	6
40	12	22	M10x1,25	10	6,5
50	16	24	M12x1,25	13	7,5
63	16	24	M12x1,25	13	7,5
80	20	32	M16x1,5	17	8
100	25	40	M20x1,5	22	10

Seal kit.
Here are the quantities and the description of the components comprised in each kit.

Description	N°	CS
Rod seal	1	●
Tube o-ring	2	●
Lip seal	2	●

The magnetic ring to be ordered separately.

How to order: 32 / SG / CSV

32	/	SG	/	CS	V
Bore	/	Series of seals	/	Type	Option

The seal kit for the cylinders in non-standard executions is to be composed according to the option.

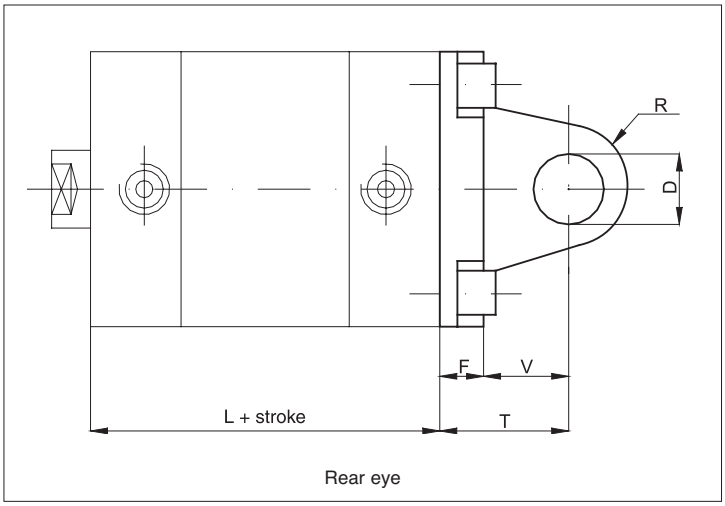

Rear eye

Ø mm	F	V	T	D	R	L
12	6	10	16	6	6	38
16	6	10	16	6	6	38
20	6	14	20	8	8	38
25	6	14	20	8	8	39,5

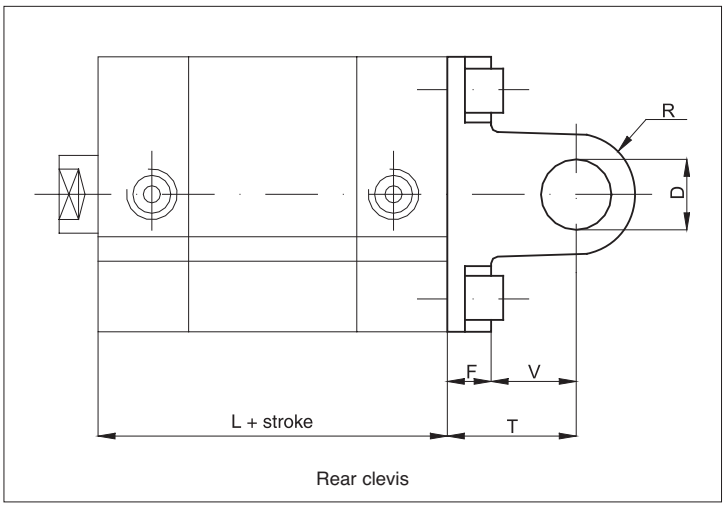

Rear clevis

Ø mm	F	V	T	D	R	L
32	9	13	22	10	10	44,5
40	9	16	25	12	12,5	45,5
50	11	16	27	12	12,5	45,5
63	11	21	32	16	15	50
80	13	23	36	16	15	56
100	15	26	41	20	20	66,5

For dimensions and codes of the accessories see page 1.100.1.

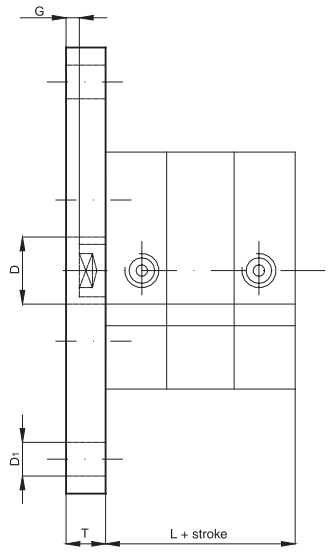

Flange

Ø mm	G	T	D_1	D	L
12	5,5	10	5,5	10	38
16	5,5	10	5,5	10	38
20	5,5	10	6,5	12	38
25	4,5	10	6,5	12	39,5
32	4	10	7	14	44,5
40	3,5	10	9	14	45,5
50	4,5	12	9	18	45,5
63	7,5	15	9	18	50
80	7	15	12	23	56
100	5	15	14	28	66,5

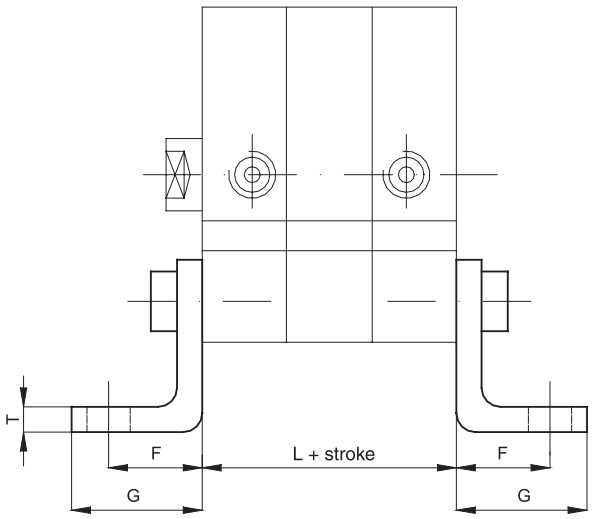

Low foot

Ø mm	F	G	T	L
12	13	17,5	3	38
16	13	17,5	3	38
20	16	22	4	38
25	16	22	4	39,5
32	18	26	5	44,5
40	20	28	5	45,5
50	24	32	6	45,5
63	27	39	6	50
80	30	42	8	56
100	33	45	8	66,5

For dimensions and codes of the accessories see page 1.100.1.

Standard executions		
Version	Symbol	Type
Magnetic	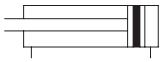	CD
Magnetic anti-rotating from bore 16 mm	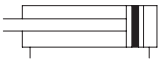	CDN

On request, they can be supplied according Directive 94/9/EC **- ATEX**
CE Ex II 2 GDc T5

Options		Suffix
Through rod		P
Seals FKM	max 150 °C	V
Piston rod with male thread		M
Special versions on request		/ S

The options can be combined (when this is possible).

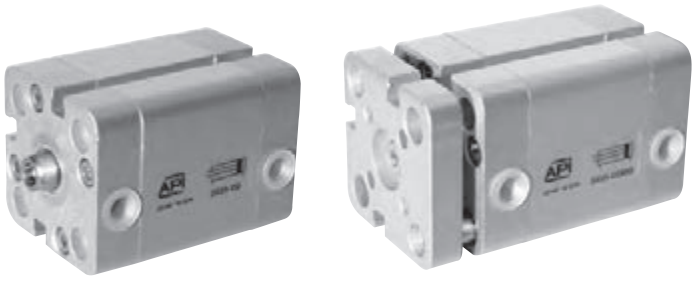

Series of compact cylinders conforming to European UNITOP standards.
The new design barrel has grooves allowing the mounting of the magnetic reed switch directly onto the barrel itself without further brackets; this allows the magnetic sensor not to protrude beyond the profile of the barrel.
Elastic cushioning are mounted on the piston.
Only in the version with magnetic piston.
One or more magnetic sensors can be applied to.
For the magnetic reed switches type ASV see from page 1.110.1
For mounting accessories see from page 1.100.1.
For rod accessories see from page 1.85.1.

How to order: 50 / 100 CDNP

50	/	100	CDN	P
Bore	/	Stroke	Type	Option

On request this series of cylinders can also be supplied with the mounting hole dimensions conforming to ISO 6431 standards, from bore 32 to 100 mm: type CDI, CDNI.
For accessories see from page 1.97.1.

Technical data		
Fluid	Compressed filtered air with or without lubrication. Lubrication, if be used, must be continous.	
Pressure range	2 ÷ 10 bar	
Temperature range	-30 °C ÷ + 80°C	
Materials	Heads:	Anodised aluminium
	Barrel:	Anodised aluminium
	Rod:	Stainless steel AISI 303
	Anti-rotating plate:	Anodised aluminium
	Seals:	Polyurethane - Aluminium piston

Bore (mm)	Standard strokes CD (mm)	Standard strokes CDN (mm)	Max stroke (mm)	Number of grooves for the sensors
12	5, 10, 15, 20, 25, 30, 40, 50, 60, 70, 80, 90, 100	–	See table standard strokes	3
16	5, 10, 15, 20, 25, 30, 40, 50, 60, 70, 80, 90, 100, 125	5, 10, 15, 20, 25, 30, 40, 50, 60, 70, 80, 90, 100, 125		
20	5, 10, 15, 20, 25, 30, 40, 50, 60, 70, 80, 90, 100, 125, 160			
25		5, 10, 15, 20, 25, 30, 40, 50, 60, 70, 80, 90, 100, 125, 160		
32	5, 10, 15, 20, 25, 30, 40, 50, 60, 70, 80, 90, 100, 125, 160, 200	5, 10, 15, 20, 25, 30, 40, 50, 60, 70, 80, 90, 100, 125, 160, 200		
40				
50	5, 10, 15, 20, 25, 30, 40, 50, 60, 70, 80, 90, 100, 125, 160, 200, 250	5, 10, 15, 20, 25, 30, 40, 50, 60, 70, 80, 90, 100, 125, 160, 200, 250		7
63	10, 15, 20, 25, 30, 40, 50, 60, 70, 80, 90, 100, 125, 160, 200, 250	10, 15, 20, 25, 30, 40, 50, 60, 70, 80, 90, 100, 125, 160, 200, 250		
80				
100				

See page 1.1.3 to calculate the cylinder force.

Should you require intermediate strokes, the overall dimensions of the cylinder body will be those of the cylinder of the following standard stroke (in fact the intermediate stroke is obtained applying a distancer).

Type: **CD**

ø 12 ÷ 25

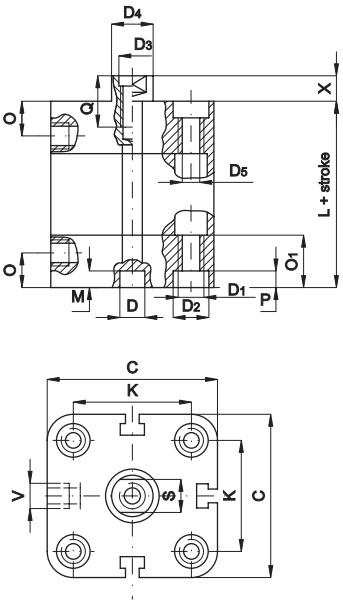

ø 32 ÷ 100

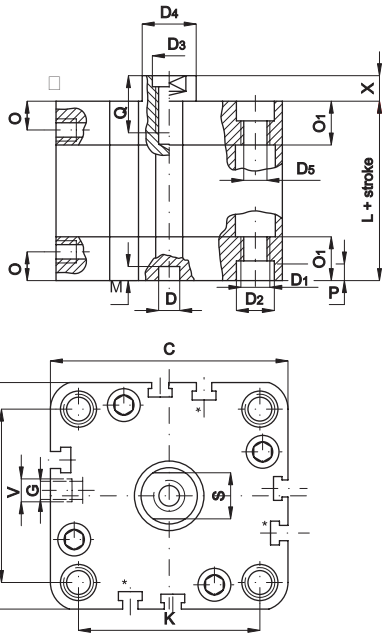

Ø mm	C	D Ø	D_1 Ø	D_2 Ø	D_3 Ø	D_4 Ø	D_5 Ø	G	V	O	O_1	K	S	P	M	Q	X	L
12	29	6	M4	6	M3	6	3,3	0	M5	8	12,25	18	5	3,5	4	6	4,5	38
16	29	6	M4	6	M4	8	3,3	0	M5	8	12,25	18	6	3,5	4	8	4,5	38
20	36	6	M5	7,5	M5	10	4,2	0	M5	8	12,25	22	8	4,5	4	10	4,5	38
25	40	6	M5	7,5	M5	10	4,2	0	M5	8	12,75	26	8	4,5	4	10	5,5	39,5
32	50	6	M6	9	M6	12	5,2	4	1/8”	8	14,5	32	10	5,5	4	12	6	44,5
40	58	6	M6	9	M6	12	5,2	3	1/8”	8	14,75	42	10	5,5	4	12	6,5	45,5
50	67	6	M8	10,5	M8	16	6,7	0	1/8”	8	14,75	50	13	6,5	4	12	7,5	45,5
63	80	8	M10	13,5	M8	16	8,5	0	1/8”	8	14,25	62	13	8,5	4	14	7,5	50
80	100	8	M10	13,5	M10	20	8,5	0	1/8”	8,5	16	82	17	8,5	4	15	8	56
100	124	8	M10	13,5	M12	25	8,5	0	1/4”	10,5	19,25	103	22	8,5	4	20	10	66,5

Type: **CDP**

ø 12 ÷ 25

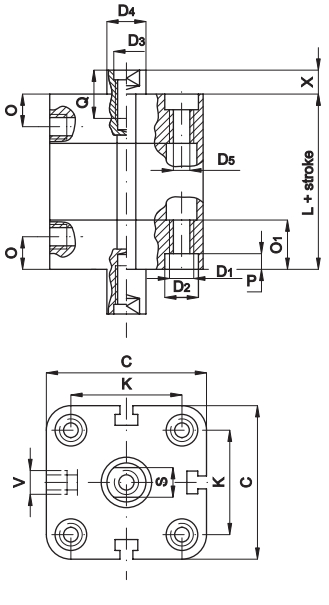

ø 32 ÷ 100

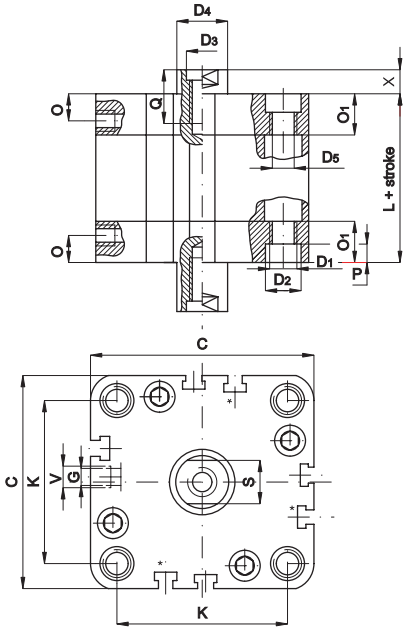

Type: **CDN**

ø 16 ÷ 25

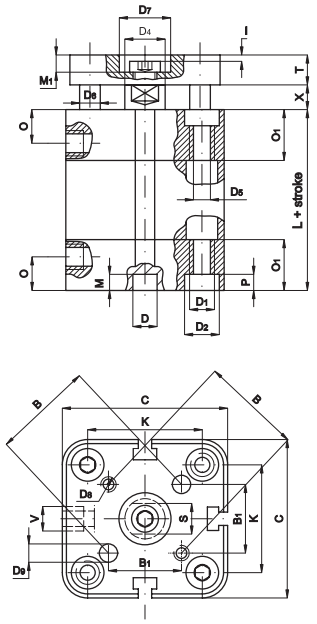

ø 32 ÷ 100

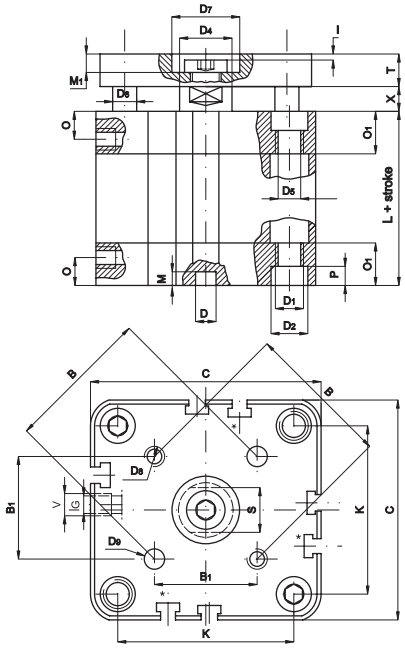

ø mm	C	D ø	D_1 ø	D_2 ø	D_4 ø	D_5 ø	D_6 ø	D_7 ø	D_8 ø	D_9 ø	G	V	O	O_1	K	B	B_1	S	P	M	M_1	I	T	X	L
16	29	6	M4	6	8	3,3	5	9	M3	3	0	M5	8	12,25	18	14	9,9	6	3,5	4	3,8	1	6	4,5	38
20	36	6	M5	7,5	10	4,2	5	11	M4	4	0	M5	8	12,25	22	17	12	8	4,5	4	5	1,5	8	4,5	38
25	40	6	M5	7,5	10	4,2	6	14	M5	5	0	M5	8	12,75	26	22	15,6	8	4,5	4	5	1,5	8	5,5	39,5
32	50	6	M6	9	12	5,2	8	17	M5	5	4	1/8”	8	14,5	32	28	19,8	10	5,5	4	6,5	2,5	10	6	44,5
40	58	6	M6	9	12	5,2	10	17	M5	5	3	1/8”	8	14,75	42	33	23,3	10	5,5	4	6,5	2,5	10	6,5	45,5
50	67	6	M8	10,5	16	6,7	10	22	M6	6	0	1/8”	8	14,75	50	42	29,7	13	6,5	4	7,5	2,5	12	7,5	45,5
63	80	8	M10	13,5	16	8,5	10	22	M6	6	0	1/8”	8	14,25	62	50	35,4	13	8,5	4	7,5	2,5	12	7,5	50
80	100	8	M10	13,5	20	8,5	14	28	M8	8	0	1/8”	8,5	16	82	65	46	17	8,5	4	9	3	14	8	56
100	124	8	M10	13,5	25	8,5	14	30	M10	10	0	1/4”	10,5	19,25	103	80	56,6	22	8,5	4	10	3	14	10	66,5

Type: **CDM**

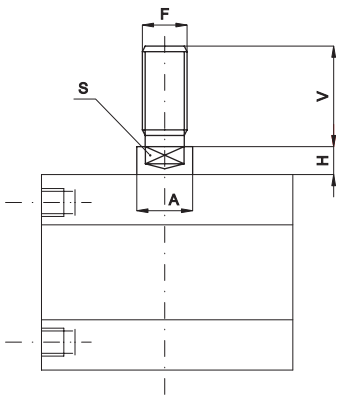

Ø mm	A	V	F	S	H
12	6	16	M6	5	4,5
16	8	20	M8	6	4,5
20	10	22	M10x1,25	8	4,5
25	10	22	M10x1,25	8	5,5
32	12	22	M10x1,25	10	6
40	12	22	M10x1,25	10	6,5
50	16	24	M12x1,25	13	7,5
63	16	24	M12x1,25	13	7,5
80	20	32	M16x1,5	17	8
100	25	40	M20x1,5	22	10

Seal kit.
Here are the quantities and the description of the components comprised in each kit.

Description	N°	CD	CDN
Rod seal	1	●	●
Tube o-ring	2	●	●
Lip seal	2	●	●

The magnetic ring to be ordered separately.

How to order: 32 / SG / CDP

32	/	SG	/	CD	P
Bore	/	Series of seals	/	Type	Option

The seal kit for the cylinders in non-standard executions is to be composed according to the option.

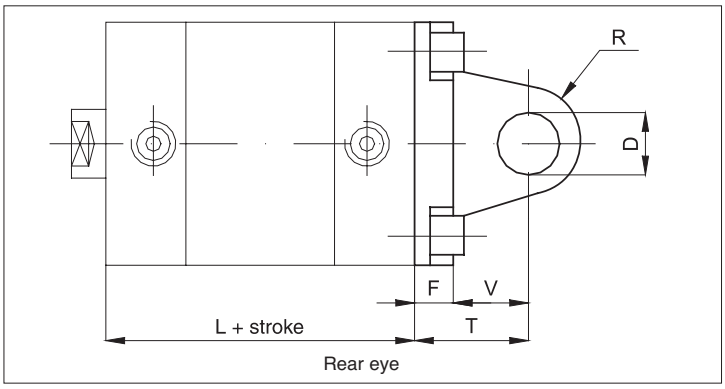

Rear eye

Ø mm	F	V	T	D	R	L
12	6	10	16	6	6	38
16	6	10	16	6	6	38
20	6	14	20	8	8	38
25	6	14	20	8	8	39,5

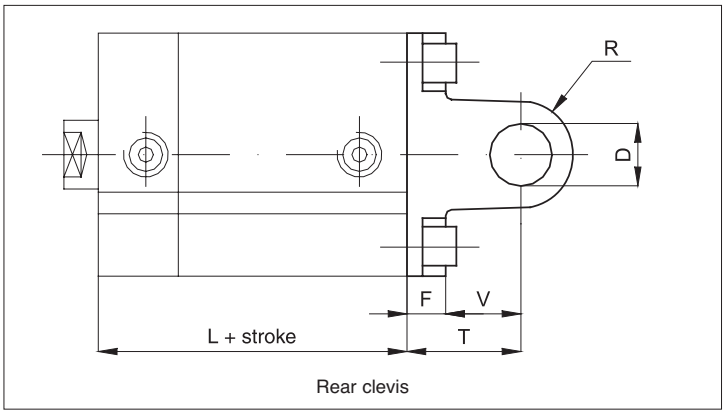

Rear clevis

Ø mm	F	V	T	D	R	L
32	9	13	22	10	10	44,5
40	9	16	25	12	12,5	45,5
50	11	16	27	12	12,5	45,5
63	11	21	32	16	15	50
80	13	23	26	16	15	56
100	15	26	41	20	20	66,5

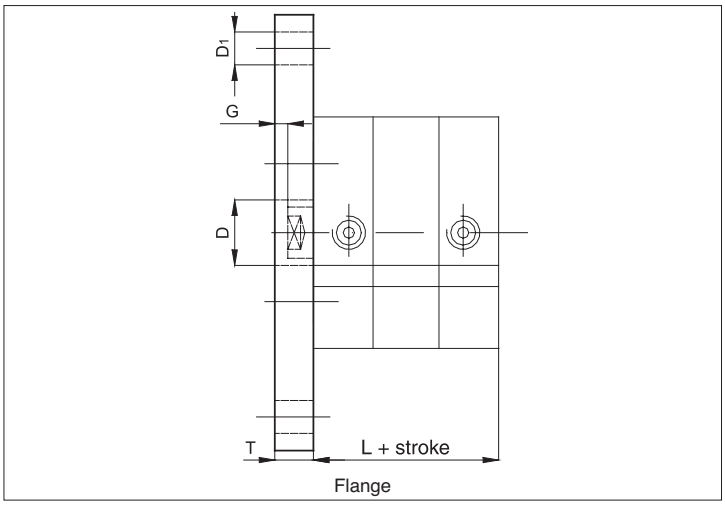

Flange

Ø mm	G	T	D_1	D	L
12	5,5	10	5,5	10	38
16	5,5	10	5,5	10	38
20	5,5	10	6,5	12	38
25	4,5	10	6,5	12	39,5
32	4	10	7	14	44,5
40	3,5	10	9	14	45,5
50	4,5	12	9	18	45,5
63	7,5	15	9	18	50
80	7	15	12	23	56
100	5	15	14	28	66,5

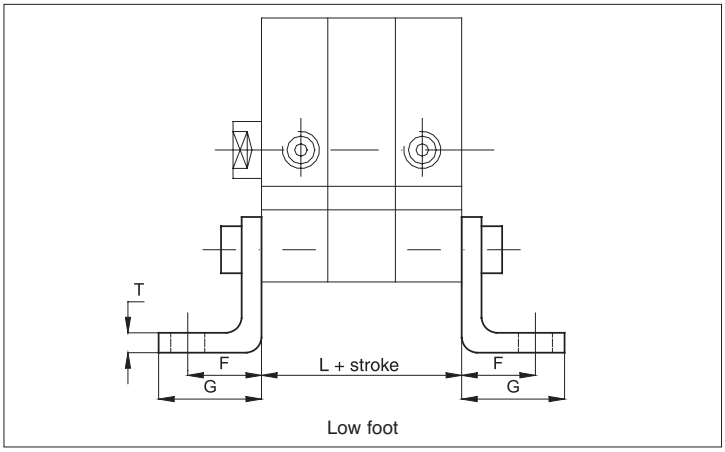

Low foot

Ø mm	F	G	T	L
12	13	17,5	3	38
16	13	17,5	3	38
20	16	22	4	38
25	16	22	4	39,5
32	18	26	5	44,5
40	20	28	5	45,5
50	24	32	6	45,5
63	27	39	6	50
80	30	42	8	56
100	33	45	8	66,5

For dimensions and codes of the accessories see page 1.100.1.

Standard executions		
Version	Symbol	Type
Non magnetic	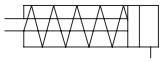	BS
Magnetic	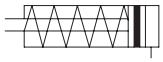	BSM

On request, they can be supplied according Directive 94/9/EC - **ATEX**
CE Ex **II 2 GDc T5**

Options		Suffix
Rear spring	with bore from 12 to 63 mm	T
Seals FKM	max 150 °C	V
Special versions on request		/ S

The options can be combined (when this is possible)



Series of short stroke cylinders with extruded aluminium profile barrel and fixing holes directly made on it.
In the magnetic type the sensor can be fixed in the groove for sensor mounting by the bracket not included in the kit.
The magnetic version is provided with elastic dampers set on the heads.
For the magnetic reed switches type ASV see from page 1.110.1.
For the bracket type AS108 see page 1.120.1
For mounting accessories see from page 1.20.20.
For the rod with male thread see nipple page 1.20.20.
For rod accessories see from page 1.85.1.

How to order: 50 / 50 BSMT

50	/	50	BSM	T
Bore	/	Stroke	Type	Option

Technical data			
Fluid	Compressed filtered air with or without lubrication. Lubrication, if be used, must be continous.		
Pressure range	2 ÷ 10 bar		
Temperature range	-20 °C ÷ + 80°C		
Materials	Heads:	from 12 to 25 mm.: Brass from 32 to 100 mm.: Aluminium	
	Barrel:	Anodised aluminium	
	Rod:	Stainless steel AISI 303	
	Seals:	NBR	
	Piston:	Non magnetic:	from 12 to 32 mm: Delrin from 40 to 100 mm: Aluminium
		Magnetic:	from 12 to 63 mm: Delrin from 80 to 100 mm: Aluminium

Bore (mm)	Standard strokes (mm)	Max stroke (mm)	Thrust force at 6 bar (N)	Traction force of the spring (N)
12	5, 10	10	55	5
16	5, 10, 15, 20, 25	25	105	6
20			170	6
25			255	13
32	5, 10, 15, 20, 25, 30, 40, 50	50	435	18
40			715	20
50	10, 15, 20, 25, 30, 40, 50		1050	40
63			1700	49
80			2850	76
100			4400	131

Type: **BS**

ø 12

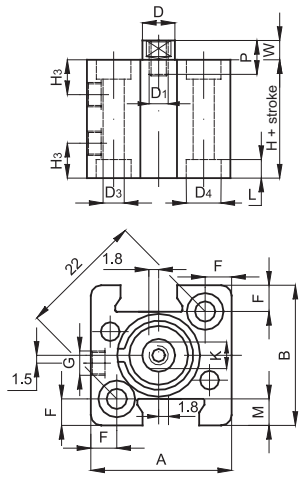

ø 16 ÷ 25

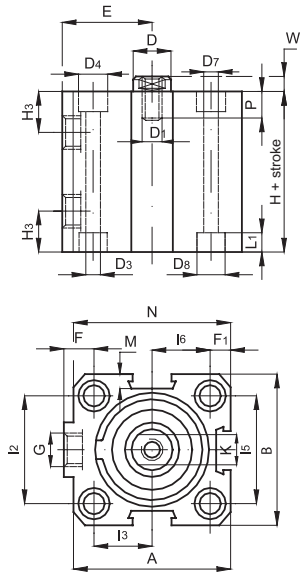

ø 32 ÷ 100

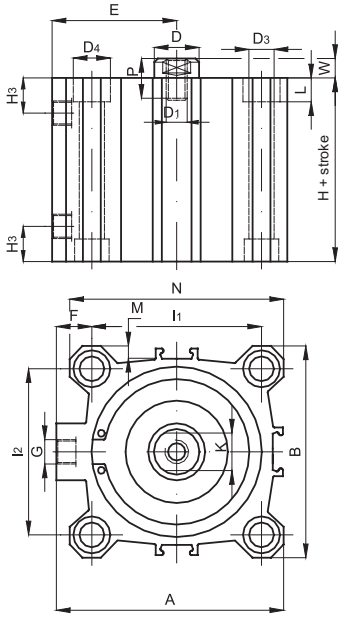

mm ø	A	B	D ø	D1	D3 ø	D4 ø	D7 ø	D8 ø	E	F	F1	G	H3	I1	I2	I3	I5	I6	K	L	L1	M	N	P	W	H*	S*
12	25	25	6	M3	3,7	5,6	-	-	-	4,7	-	M5	5,5	-	-	-	-	-	5	3,5	-	4,7	-	6	3,5	17	27
16	34	30	8	M4	4,7	7,5	3,7	5,6	19	7	5	M5	8	-	18	12	20	10	6	4,6	3,5	4	32	8	4,5	27	32
20	40	36	10	M5	5,8	9	5,8	9	22	7	5,2	M5	8	-	20	15	25,5	12,7	8	5,7	5,7	5,7	38,5	10	5	27	32
25	44,5	40	10	M5	5,8	9	5,8	9	24,5	9	6	1/8”	10,5	-	26	15,5	28	14	8	5,7	5,7	4,5	42	10	5,5	28,5	38,5
32	51	46	12	M6	5,8	9	-	-	27	9	-	1/8”	11,5	36	32	-	-	-	10	5,7	-	4	48	12	6	29,5	39,5
40	58	55	12	M6	5,8	9	-	-	30,5	9,5	-	1/8”	11	42	42	-	-	-	10	5,7	-	4	55	12	6	29,5	39,5
50	70	65	16	M8	6,8	11	-	-	37,5	12,5	-	1/8”	11,5	50	50	-	-	-	13	6,8	-	4	65	12	7,5	34,5	39,5
63	86	80	16	M8	9	14	-	-	46	15	-	1/8”	11	62	62	-	-	-	13	8,8	-	5	80	14	7	37	42
80	105	100	20	M10	9	14	-	-	55	14	-	1/4”	14	82	82	-	-	-	17	9	-	6	100	15	8	46	46
100	131	124	25	M12	11	17,2	-	-	69	17,5	-	1/4”	16	103	103	-	-	-	22	11	-	7,5	124	20	10	56	56

*Over 30 mm stroke add 10 mm to above dimensions.

Type: **BSM**

ø 12

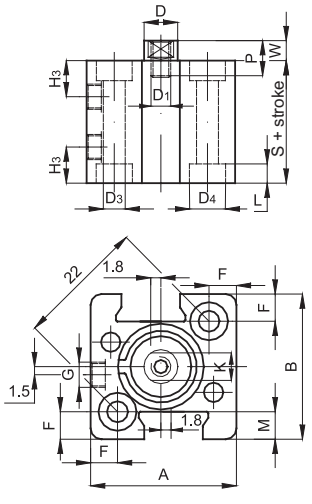

ø 16 ÷ 25

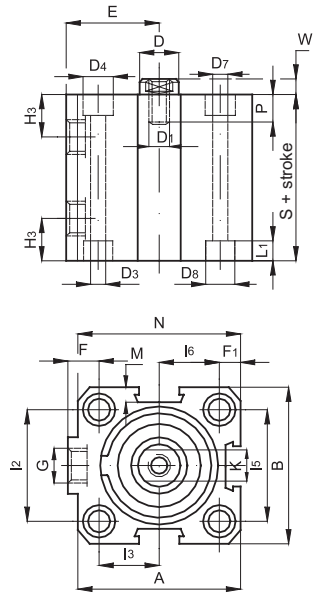

ø 32 ÷ 100

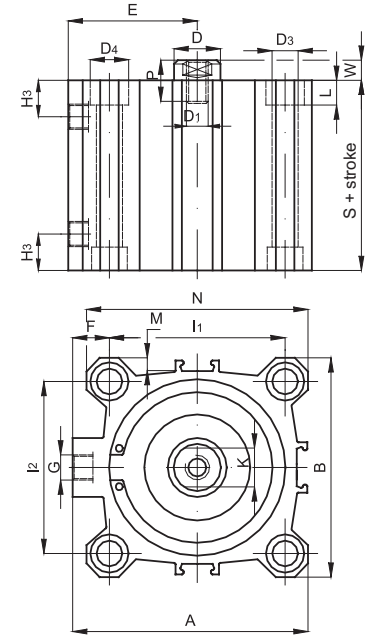

GENERAL INDEX CILINDERS INDEX

Standard executions		
Version	Symbol	Type
Non magnetic	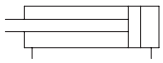	BD
Magnetic	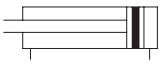	BDM
Anti-rotating magnetic from bore 20 to 100 mm	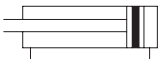	BDMN



On request, they can be supplied according Directive 94/9/EC - **ATEX**
CE Ex II 2 GDc T5

Options		Suffix
Through rod	from bore 16 to 100 mm	P
Seals FKM	max 150 °C from bore 12 to 100 mm	V
Special versions on request		/ S

The options can be combined (when this is possible).



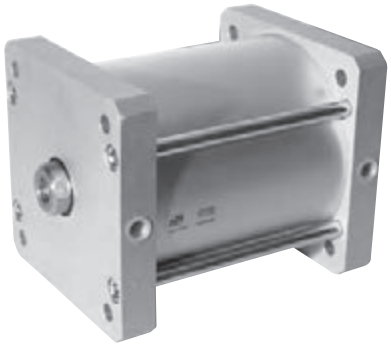

Series of short stroke cylinders with extruded aluminium profile barrel (up to the bore 100 mm) and fixing holes directly in the profile.
In the magnetic type, up to the bore 100 mm, the sensor can be fixed in the groove for sensor mounting by the bracket not included in the kit.
The sensor is to be fixed on the external tie rods with the bores 125, 160 and 200 mm.
Standard elastic dampers (except the non magnetic type up to the bore 100 mm).
For the magnetic reed switches type ASV see from page 1.110.1.
For the bracket type AS108 see page 1.120.1
For mounting accessories see from page 1.20.20.
For the rod with male thread see nipple page 1.20.20.
For rod accessories see from page 1.85.1.
How to order: 40 / 50 BDP

40	/	50	BD	P
Bore	/	Stroke	Type	Option

Technical data	
Fluid	Compressed filtered air with or without lubrication. Lubrication, if be used, must be continous.
Pressure range	2 ÷ 10 bar
Temperature range	-20 °C ÷ + 80°C
Materials	Heads: from 12 to 25 mm: Brass from 32 to 200 mm: Aluminium Barrel: Anodised aluminium (the bores 125, 160 and 200 mm are provided with a round profile) Rod: Stainless steel AISI 303 Seals: NBR Piston: Non magnetic: from 12 to 32 mm: Delrin, from 40 to 200 mm: Aluminium; Magnetic: from 12 to 63 mm: Delrin, from 80 to 200 mm: Aluminium

Bore (mm)	Standard strokes BD (mm)	Standard strokes BDM (mm)	Standard strokes BDMN (mm)	Max strokes (mm) BD	BDM	BDMN
12	5, 10, 15, 20, 25, 30, 40	5, 10, 15, 20, 25, 30		40	30	
16	5, 10, 15, 20, 25, 30, 40, 50	5, 10, 15, 20, 25, 30, 40, 50, 60, 80, 100,		50	100	
20		5, 10, 15, 20, 25, 30, 40, 50, 60, 80, 100, 125	5, 10, 15, 20, 25, 30, 40, 50, 60, 80, 100		125	100
25						
32	5, 10, 15, 20, 25, 30, 40, 50, 60, 80, 100,	5, 10, 15, 20, 25, 30, 40, 50, 60, 80, 100, 125, 160		100	160	
40						
50	10, 15, 20, 25, 30, 40, 50, 60, 80, 100,	10, 15, 20, 25, 30, 40, 50, 60, 80, 100, 125, 160, 200	10, 15, 20, 25, 30, 40, 50, 60, 80, 100, 125		200	125
63			10, 15, 20, 25, 30, 40, 50, 60, 80, 100, 125, 160			160
80		10, 15, 20, 25, 30, 40, 50, 60, 80, 100, 125, 160, 200, 250			250	
100						
125	25, 50, 75, 100, 125, 160, 200, 250	25, 50, 75, 100, 125, 160, 200, 250		250	250	
160						
200						

See page 1.1.3 to calculate the cylinder force.

Should you require intermediate strokes, the overall dimensions of the cylinder body will be those of the cylinder of the following standard stroke (in fact the intermediate stroke is obtained applying a distancer).

Type: **BD**

ø 12

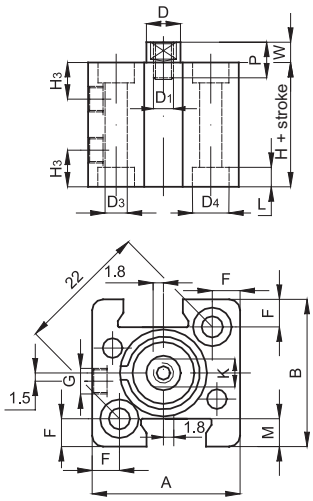

ø 16 ÷ 25

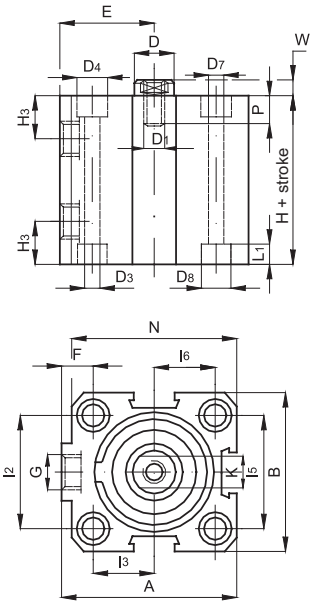

ø 32 ÷ 100

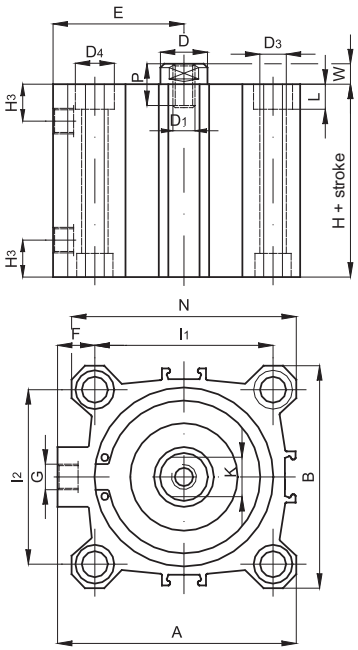

ø mm	A	B	D ø	D_1	D_2	D_3 ø	D_4 ø	D_7 ø	D_8 ø	E	F	Q	G	H_3	l_1	l_2	l_3	l_5	l_6	K	L	L_1	M	N	P	W	H	S
12	25	25	6	M3	-	3,7	5,6	-	-	-	4,7	-	M5	5,5	-	-	-	-	-	5	3,5	-	3,5	-	6	3,5	17	27
16	34	30	8	M4	-	4,7	7,5	3,7	5,6	19	7	-	M5	8	-	18	12	20	10	6	4,6	3,5	4,5	32	8	4,5	27	32
20	40	36	10	M5	-	5,8	9	5,8	9	22	7	-	M5	8	-	20	15	25,5	12,7	8	5,7	5,7	4,5	38,5	10	5	27	32
25	44,5	40	10	M5	-	5,8	9	5,8	9	24,5	9	-	1/8”	10,5	-	26	15,5	28	14	8	5,7	5,7	5,5	42	10	5,5	28,5	38,5
32	51	46	12	M6	24,5	5,8	9	-	-	27	9	5	1/8”	11,5	36	32	-	-	-	10	5,7	-	11	48	12	6	29,5	39,5
40	58	55	12	M6	28	5,8	9	-	-	30,5	9,5	6	1/8”	11	42	42	-	-	-	10	5,7	-	12,5	55	12	6	29,5	39,5
50	70	65	16	M8	34	6,8	11	-	-	37,5	12,5	6	1/8”	11,5	50	50	-	-	-	13	6,8	-	13,5	65	12	7,5	34,5	39,5
63	86	80	16	M8	38,5	9	14	-	-	46	15	8	1/8”	11	62	62	-	-	-	13	8,8	-	15	80	14	7	37	42
80	105	100	20	M10	44	9	14	-	-	55	14	10	1/4”	14	82	82	-	-	-	17	9	-	18	100	15	8	46	46
100	131	124	25	M12	56	11	17,2	-	-	69	17,5	10,5	1/4”	16	103	103	-	-	-	22	11	-	20,5	124	20	10	56	56

Type: **BDM**

ø 12

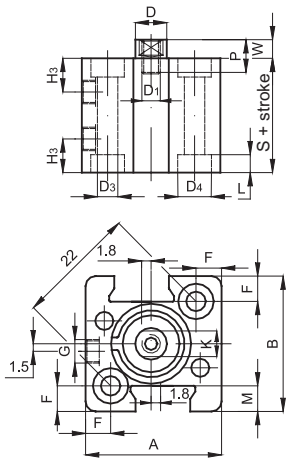

ø 16 ÷ 25

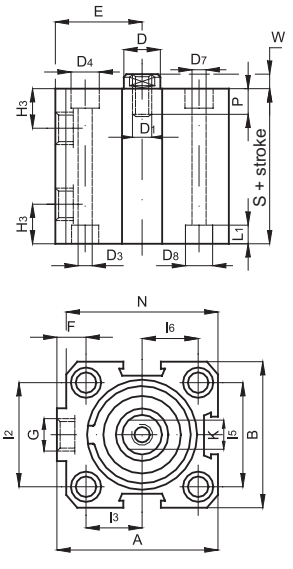

ø 32 ÷ 100

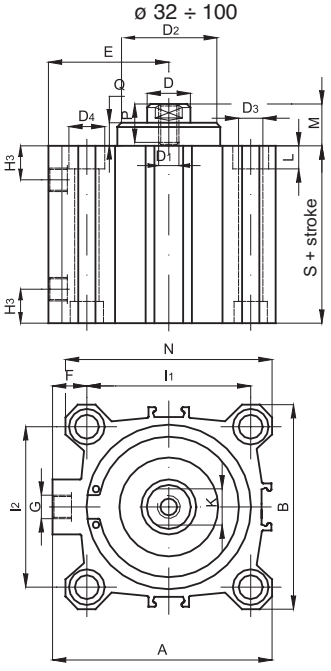

GENERAL INDEX CILINDERS INDEX

Type: **BDM**

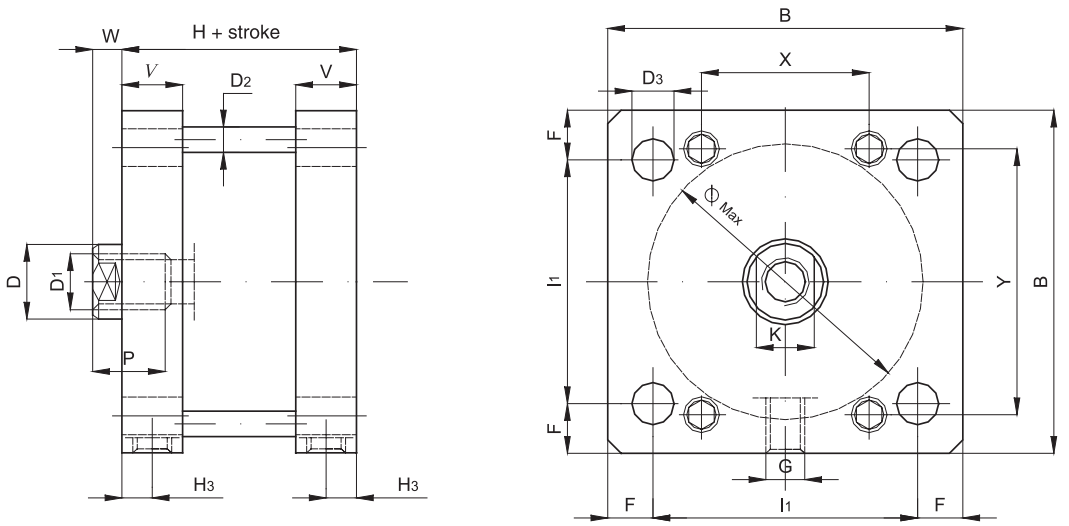

ø mm	B	D ø	D1 ø	D2 ø	D3 ø	F	G	H3	I1	K	P	V	W	X	Y	ø est. max.	H
125	140	30	M14	10	10,2	15	1/4”	10	110	28	25	22	10	77	123	132	78
160	180	40	M20	12	14,2	20	3/8”	12	140	36	30	26	12	94	157	168	87
200	220	40	M20	14	14,2	22,5	3/8”	12	175	36	30	26	12	126	193	210	87

Type: **BDP**
ø 16 ÷ 25

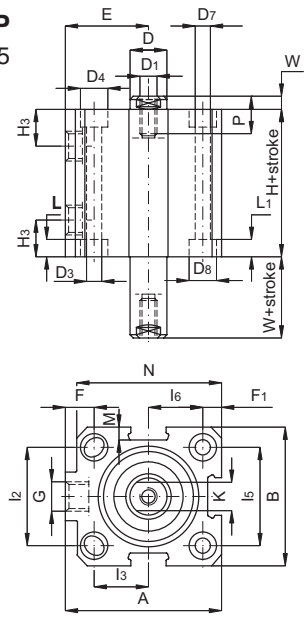

Type: **BDMP**
ø 32 ÷ 100

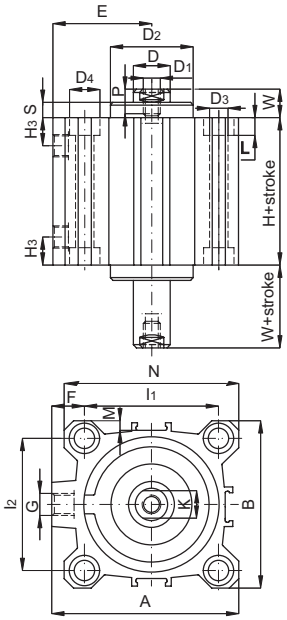

ø mm	A	B	D ø	D1	D2 ø	D3 ø	D4 ø	D7 ø	D8	E	F	F1	G	H3	I1	I2	I3	I5	I6	K	L	L1	M	N	P	S	W	H
16	34	30	8	M4	-	4,7	7,5	3,7	5,6	19	7	5	M5	8	-	18	12	20	10	6	4,6	3,5	4	32	8	-	4,5	32
20	40	36	10	M5	-	5,8	9	5,8	9	22	7	2,5	M5	8	-	20	15	25,5	12,7	8	5,7	5,7	5,7	38,5	10	-	4,5	32
25	44,5	40	10	M5	-	5,8	9	5,8	9	24,5	9	6	1/8”	10,5	-	26	15,5	28	14	8	5,7	5,7	4,5	42	10	-	5,5	38,5
32	51	46	12	M6	24,5	5,8	9	-	-	27	9	-	1/8”	11,5	36	32	-	-	-	10	5,7	-	4	48	12	5	11	39,5
40	58	55	12	M6	28	5,8	9	-	-	30,5	9,5	-	1/8”	11	42	42	-	-	-	10	5,7	-	4	55	12	6	12,5	39,5
50	70	65	16	M8	34	6,8	11	-	-	37,5	12,5	-	1/8”	11,5	50	50	-	-	-	13	6,8	-	4	65	12	6	13,5	39,5
63	86	80	16	M8	38,5	9	14	-	-	46	15	-	1/8”	11	62	62	-	-	-	13	8,8	-	5	80	14	8	15	47
80	105	100	20	M10	44	9	14	-	-	55	14	-	1/4”	14	82	82	-	-	-	17	9	-	6	100	15	10	18	51
100	131	124	25	M12	56	11	17,2	-	-	69	17,5	-	1/4”	16	103	103	-	-	-	22	11	-	7,5	124	20	10,5	20,5	65

Type: **BDMN**

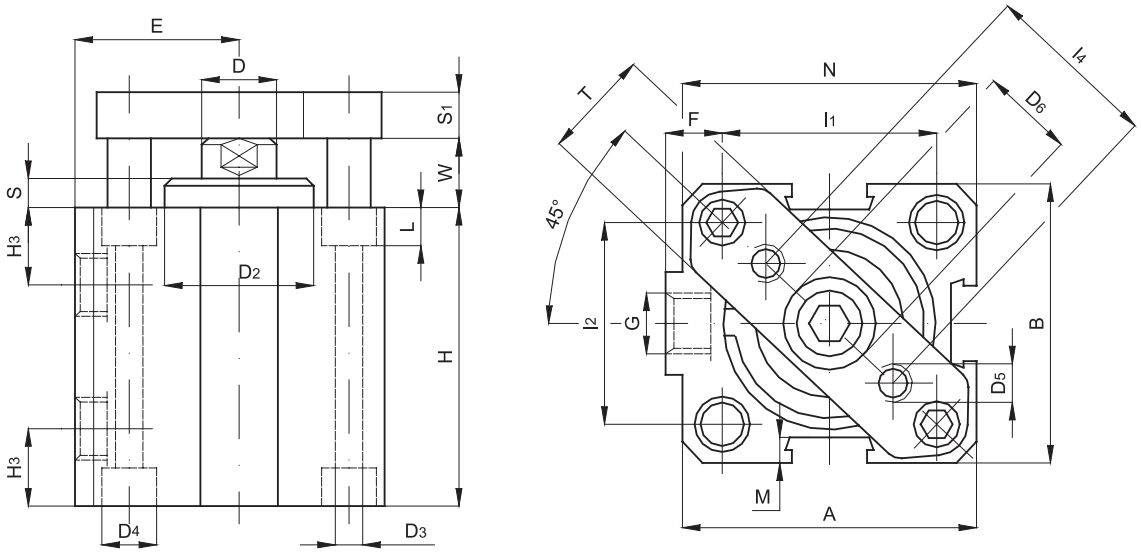

ø mm	A	B	α	D ø	D_2 ø	D_3 ø	D_4 ø	D_5 ø	D_6 ø	E	F	G	H_3	I_1	I_2	I_4	L	M	N	S	S_1	T	W	H
20	40	36	45°	10	-	5,8	9,2	M4	11	22	9,3	M5	8	25,5	25,5	20	5,7	5,7	38,5	-	8	15	4,5	32
25	44,5	40	45°	10	-	5,8	9,2	M4	11	24,5	10,5	1/8”	11	28	28	22	5,7	4,5	42	-	8	15	5,5	38,5
32	51	46	41,5°	12	24,5	5,8	9,2	M5	17	27	9	1/8”	11,5	36	32	28	5,7	4	48	5	10	20	11	39,5
40	58	55	45°	12	28	5,8	9,2	M5	17	30,5	9,5	1/8”	11,5	42	42	33	5,7	4	55	6	10	20	12,5	39,5
50	70	65	45°	16	34	6,8	11	M6	22	37,5	12,5	1/8”	11,5	50	50	42	6,8	4	65	6	12	30	13,5	39,5
63	86	80	45°	16	38,5	9	14	M6	22	46	15	1/8”	12	62	62	50	8,8	5	80	8	12	30	15	42
80	105	100	45°	20	44	9	14	M8	28	55	14	1/4”	14	82	82	65	9	6	100	10	14	50	18	46
100	131	124	45°	25	56	11	17,2	M10	30	69	17,5	1/4”	16	103	103	80	11	7,5	124	10,5	14	50	20,5	56

Seal kit
Here are the quantities and the components comprised in each kit.

Description	N°	BD	BDM	BDMN
Rod seal	1	●	●	●
Tube o-ring	2	●	●	●
Lip seal	2	●	●	●

The magnetic ring to be ordered separately.

How to order: 50 / SG / BDP

50	/	SG	/	BD	P
Bore	/	Series of seals	/	Type	Option

The seal kit for the cylinders in non-standard executions is to be composed according to the option.

GENERAL INDEX CILINDERS INDEX

Type: **CM**

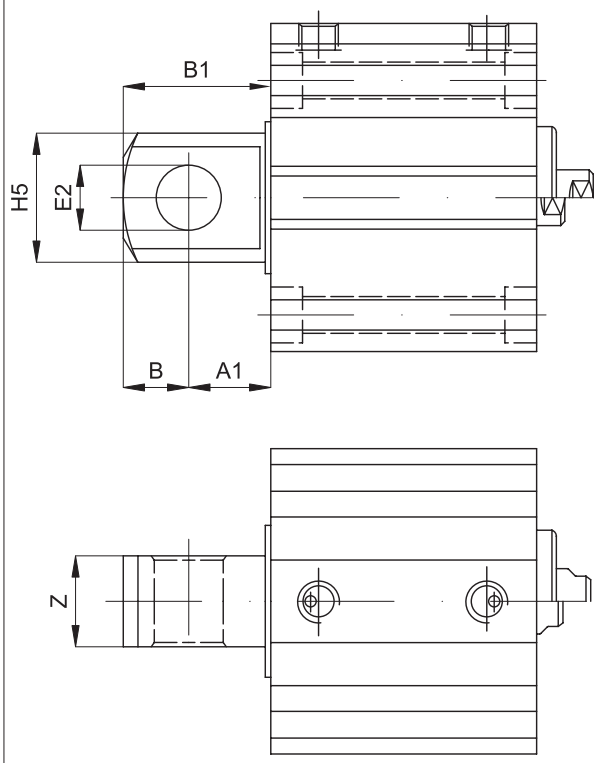

Rear eye

Code	Item	ø mm	A_1	B	E_2 ø (H8)	H_5 ø	Z	B_1
040070	CM16ALB	16	8	6	6	12	7	14
040071	CM20ALB	20	10	8	8	16	9	18
040072	CM25ALB	25	10	8	8	16	9	18
040073	CM32ALB	32	13	10	10	20	14	23
040074	CM40ALB	40	15	12	12	24	16	27
040075	CM50ALB	50	15	12	12	24	17	27
040076	CM63ALB	63	19	16	16	32	22	35
040077	CM80ALB	80	19	16	16	32	22	35
040078	CM100ALB	100	23	20	20	40	26	43

Material: Aluminium
Note: This accessory must be ordered together with the cylinder.

Type: **N**

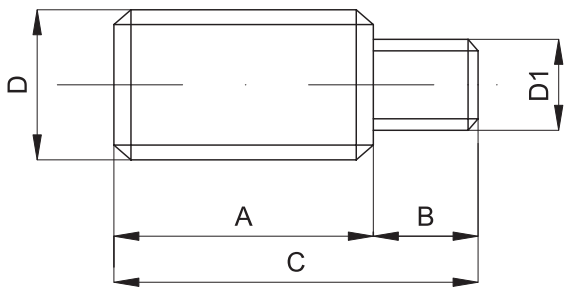

Nipple for rod

Code	Item	ø mm	D	D_1	A	B	C
040079	N6-3AQB	12	6x1	M3	16	6,5	22,5
040080	N6-4AQC	16	6x1	M4	15	8	23
040081	N8-5AQB	20-25	8x1,25	M5	20	10	30
040082	N10-6AQB	32-40	10x1,25	M6	22	12	34
040083	N12-8AQB	50-63	12x1,25	M8	24	14	38
040084	N16-8AQB	50-63	16x1,5	M8	32	14	46
040085	N16-10AQB	80	16x1,5	M10	32	15	47
040086	N20-12AQB	100	20x1,5	M12	40	20	60

Material: Zinc plated steel

Type: **P**

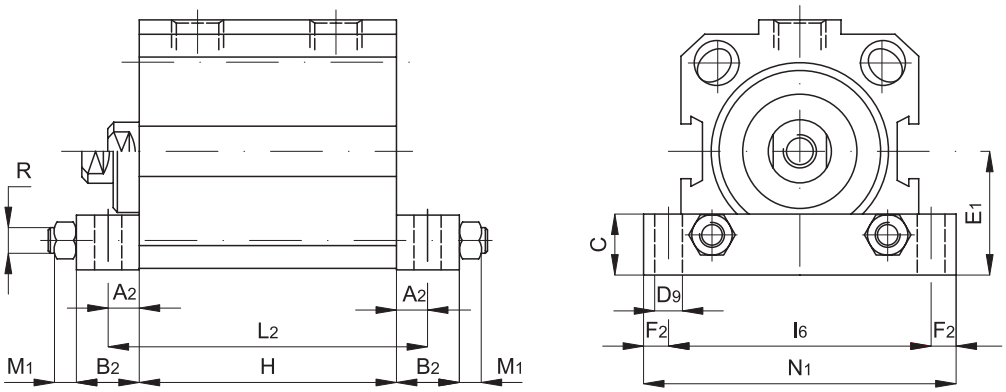

High foot ø 16 ÷ 63

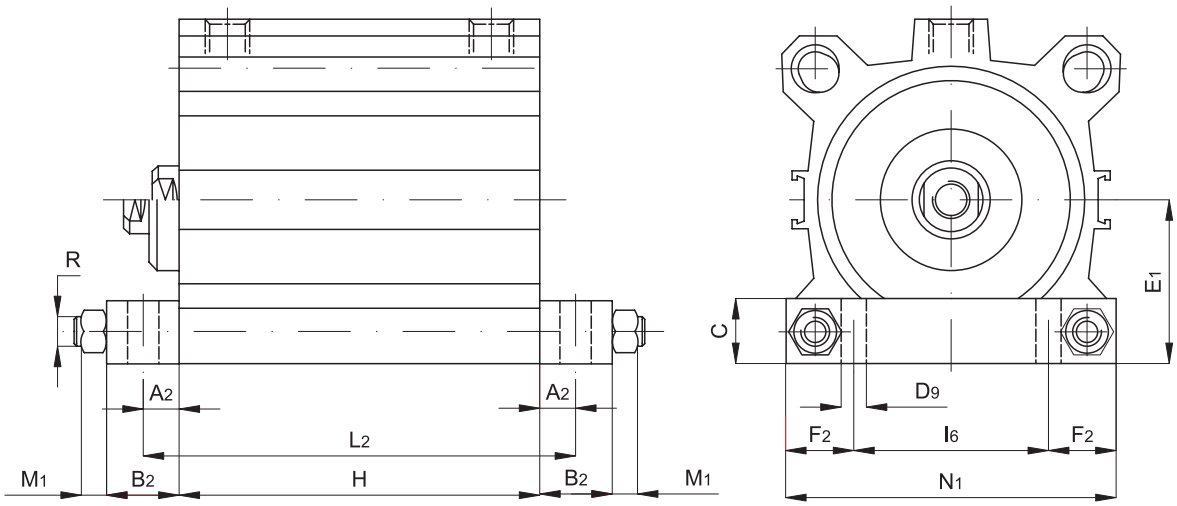

High foot ø 80 ÷ 100

The dimension H is according to the stroke and the bore of the cylinder.

The kit includes 2 high feet; the tie rods for the mounting of the feet are not included.
Material: Aluminium.

Code	Item	ø mm	A_2	B_2	C	D_9 ø	E_1	F_2	I_6	L_2	M_1	N_1	R ø
040087	P16ALB	16	5	10	10	3,5	17	5	30	H*+10	2,4	40	M3
040088	P20ALB	20	5	10	10	5,5	18	5	40	H*+10	4	50	M5
040095	P25ALB	25	6	12	12	5,5	20	7,5	45	H*+12	4	60	M5
040089	P32ALB	32	6	12	12	5,5	24	5	50	H*+12	4	60	M5
040090	P40ALB	40	6	12	12	5,5	27,5	5	60	H*+12	4	70	M5
040091	P50ALB	50	7,5	15	15	6,5	32,5	5	70	H*+15	5	80	M6
040092	P63ALB	63	7,5	15	15	8,5	40	7,5	85	H*+15	6,5	100	M8
040093	P80ALB	80	10	20	20	8,5	50	20	60	H*+20	6,5	100	M8
040094	P100ALB	100	10	20	20	10,5	62	22	80	H*+20	8	124	M10

Standard executions		
Version	Symbol	Type
With self-lubricating bushings	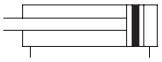	GEDB
With spherical bearings	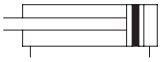	GEDS



On request, they can be supplied according Directive 94/9/EC - **ATEX**
CE Ex **II 2 GDc T5**

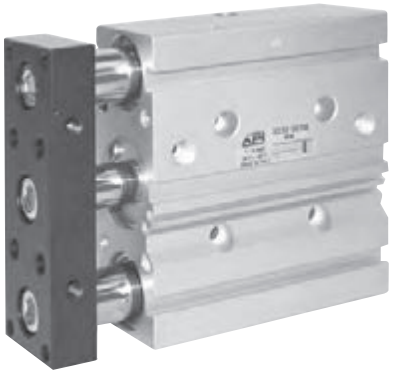

Series of compact guided cylinders magnetic as standard.
A one piece body is provided with grooves allowing the mounting of the magnetic reed switch without further brackets; this makes the magnetic sensor not protrude outside the body itself. The bottom plates are provided with elastic cushionings.

For the magnetic reed switches type ASC see from page 1.110.1.

Options		Suffix
Seals FKM	max 150 °C	V
Special versions on request		/ S

The options can be combined (when this is possible).

How to order: 32 / 50 GEDBV

32	/	50	GEDB	V
Bore	/	Stroke	Type	Option

Technical data		
Fluid	Compressed filtered air with or without lubrication. Lubrication, if be used, must be continous.	
Pressure range	1,5 ÷ 9 bar	
Temperature range	-10 °C ÷ + 70°C	
Materials	Bottom plates:	Anodised aluminium
	Body:	Anodised aluminium
	Plate:	Anodised aluminium
	Guiding rods:	GEDB: Chrome-plated and ground steel
		GEDS: Chrome steel hardened and chrome-plated
	Piston rod:	Chrome-plated steel C 45
	Seals:	Nitrile rubber (NBR) - Piston: Brass
	Guiding bushings :	GEDB: Sintered bronze
		GEDS: Spherical bearings

Bore (mm)	Standard strokes (mm)	Max stroke (mm)
10	25, 50, 75, 100	100
16	25, 50, 75, 100, 125, 150, 175, 200	200
20		
25		
32	30, 50, 75, 100, 125, 150,175, 200, 250	250
40		
50	30, 50, 75, 100, 125, 150	150
63		

See page 1.1.3 to calculate the cylinder force.

Should you require intermediate strokes, the overall dimensions of the cylinder body will be those of the cylinder with the following standard stroke (in fact the intermediate stroke is obtained applying a distancer).

Admissible transverse load

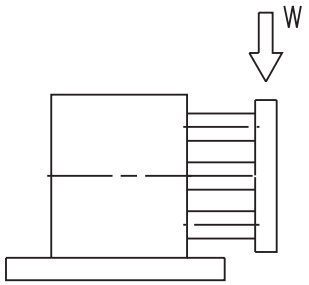

Bore mm	Type	Stroke mm						
		25	30	50	75	100	125	150
Ø 10	GEDB	8	6	4	8	6	4	3
	GEDS	1,5	1,2	1	4	3,5	3	2,5
Ø 16	GEDB	8	6	4	8	6	4	3
	GEDS	1,5	1,2	1	4	3,5	3	2,5
Ø 20	GEDB	14	12	10	12	10	8	5
	GEDS	2,5	2,1	2	8	6	4	3
Ø 25	GEDB	20	18	16	20	18	15	12
	GEDS	7	6	5	20	16	13	10
Ø 32	GEDB	27	24	22	24	22	20	18
	GEDS	9	8	7	25	22	27	18
Ø 40	GEDB	27	24	22	24	22	20	18
	GEDS	9	8	9	25	22	20	18
Ø 50	GEDB	45	42	40	45	40	35	30
	GEDS	12	11	9,5	40	32	28	25
Ø 63	GEDB	45	42	40	45	40	35	30
	GEDS	12	11	9,5	40	32	28	25

Note: Cylinders from 75 mm stroke are supplied with double guiding bushings.

Maximum admissible torque

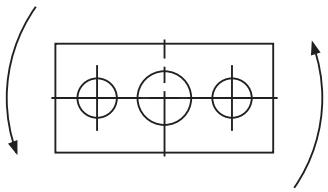

Bore mm	Type	Stroke mm						
		25	30	50	75	100	125	150
Ø 10	GEDB	25	20	15	25	20	15	10
	GEDS	3	2,5	2	4	3	2	1,5
Ø 16	GEDB	25	20	15	25	20	15	10
	GEDS	3	2,5	2	4	3	2	1,5
Ø 20	GEDB	40	35	30	40	35	30	25
	GEDS	4	3	2	15	12	10	8
Ø 25	GEDB	65	55	50	65	55	50	40
	GEDS	2	10	8	30	25	20	16
Ø 32	GEDB	90	80	70	90	75	60	45
	GEDS	18	16	14	50	45	40	35
Ø 40	GEDB	90	80	70	90	75	60	45
	GEDS	18	16	14	50	45	40	35
Ø 50	GEDB	150	130	110	150	120	100	80
	GEDS	35	30	25	100	85	70	55
Ø 63	GEDB	150	130	110	150	120	100	80
	GEDS	35	30	25	120	85	70	55

Note: Cylinders from 75 mm stroke are supplied with double guiding bushings.

Non-rotating accuracy

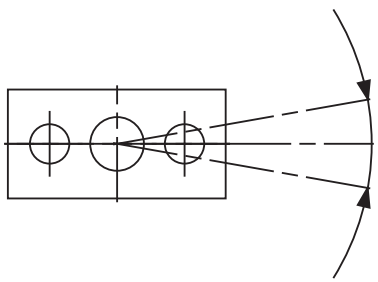

Bore mm	Non-rotating accuracy θ
Ø 10 Ø 16	± 0,18
Ø 20 Ø 25	± 0,17
Ø 32 Ø 40	± 0,16
Ø 50 Ø 63	± 0,15

Ø 10

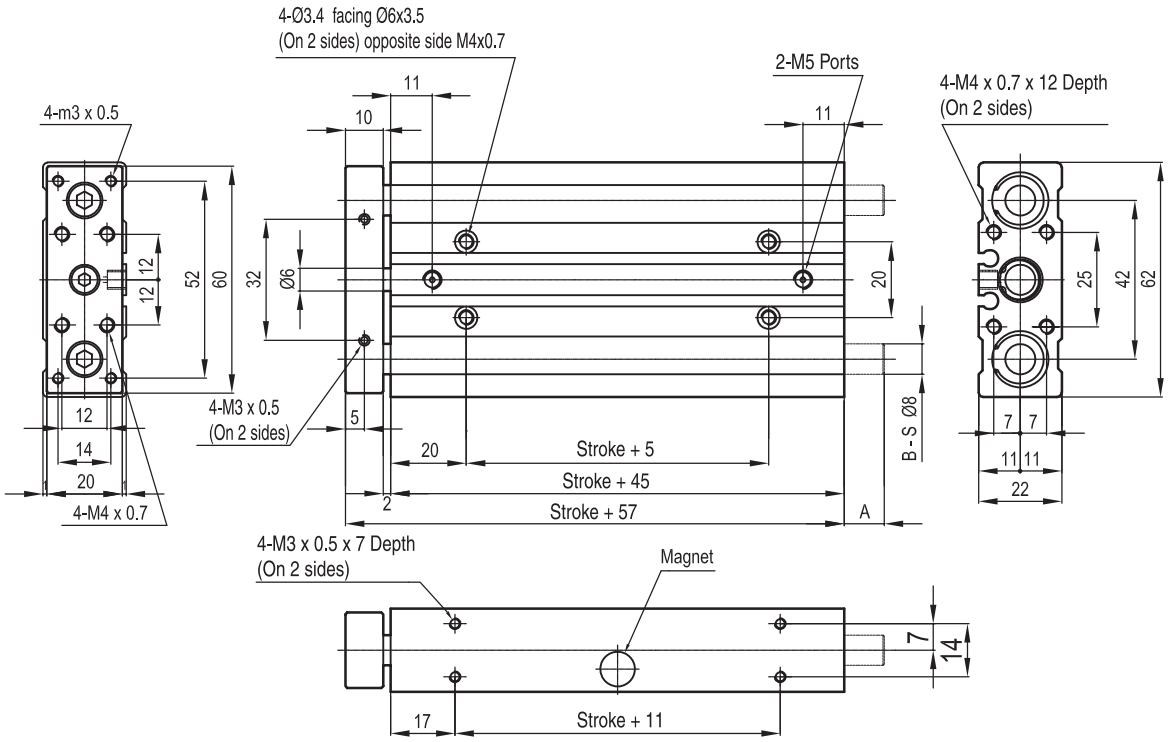

COMPACT GUIDED CYLINDER

Type: GEDB (S) 10 X 75 Stroke

Stroke mm. / Dimension	25	50	75	100
A	0	0	10.5	10.5

Ø 16

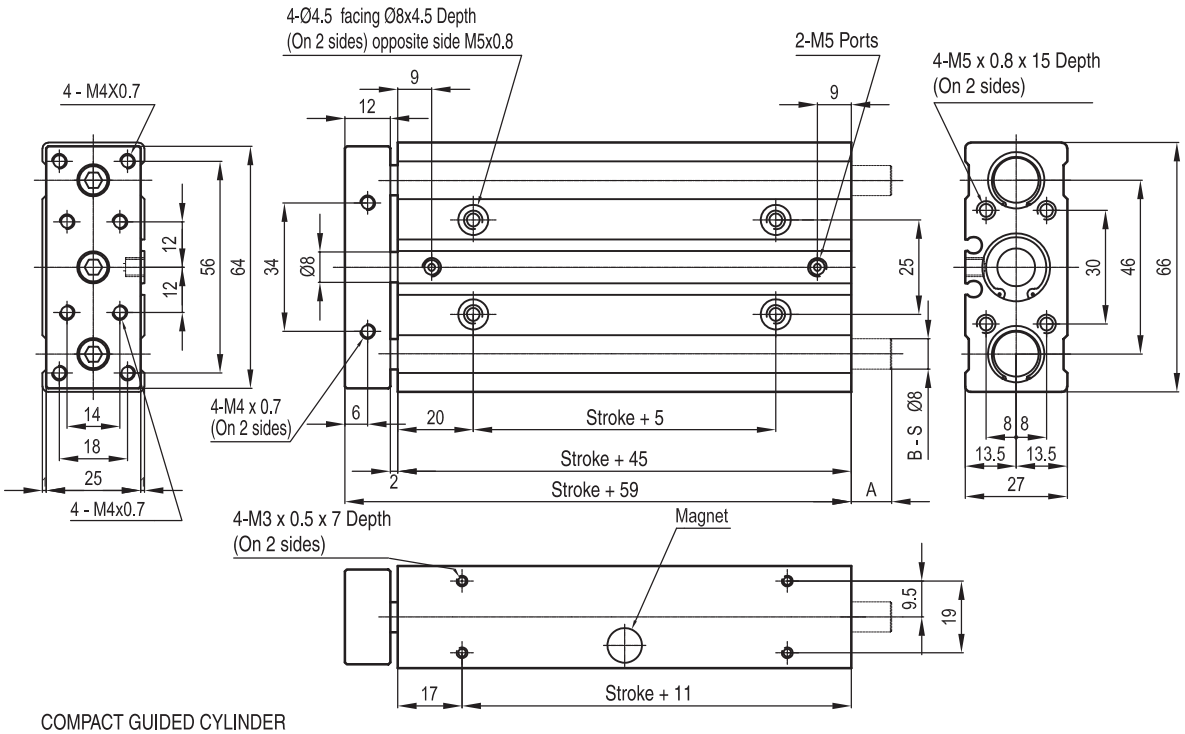

COMPACT GUIDED CYLINDER

Type: GEDB (S) 16 X 75 Stroke

Stroke mm. / Dimension	25	50	75	100	125	150	175	200
A	0	0	12	12	12	12	12	12

Ø 20

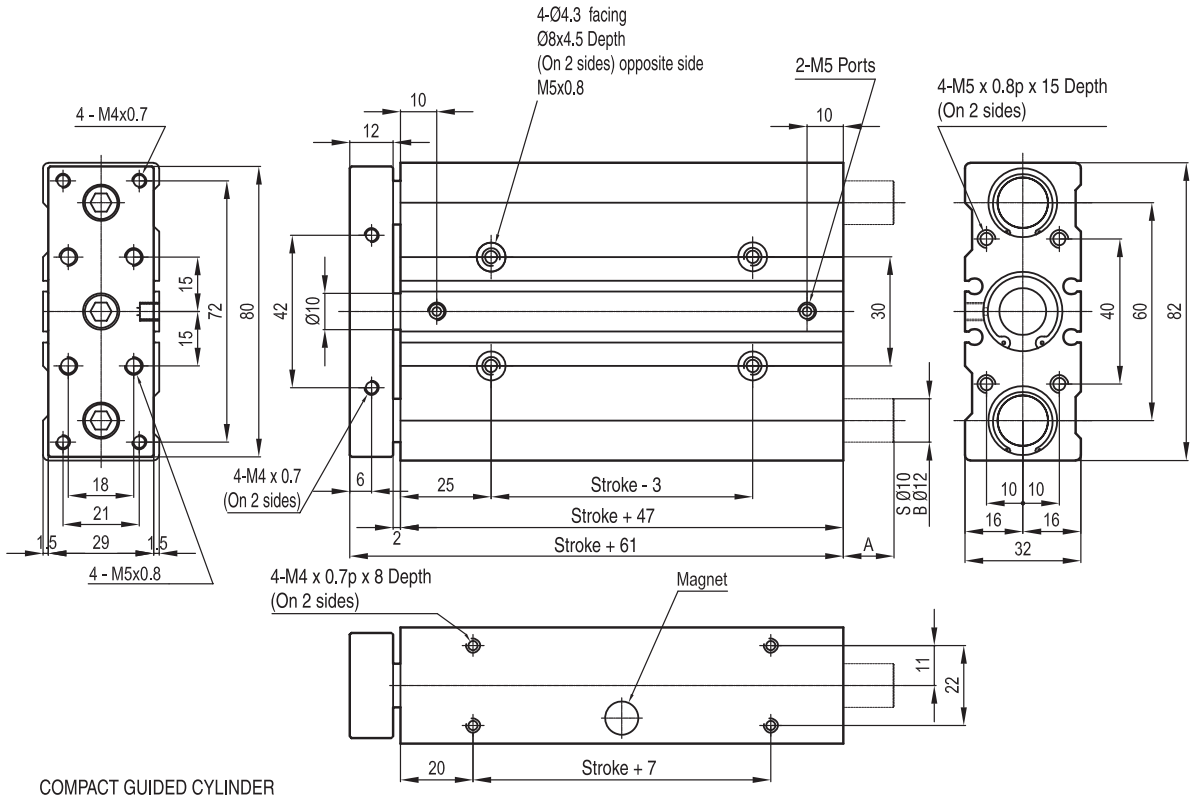

COMPACT GUIDED CYLINDER

Type: GEDB (S) 20 X 75 Stroke

Dimension \ Stroke mm.	25	50	75	100	125	150	175	200
A	0	0	14	14	14	14	14	14

Ø 25

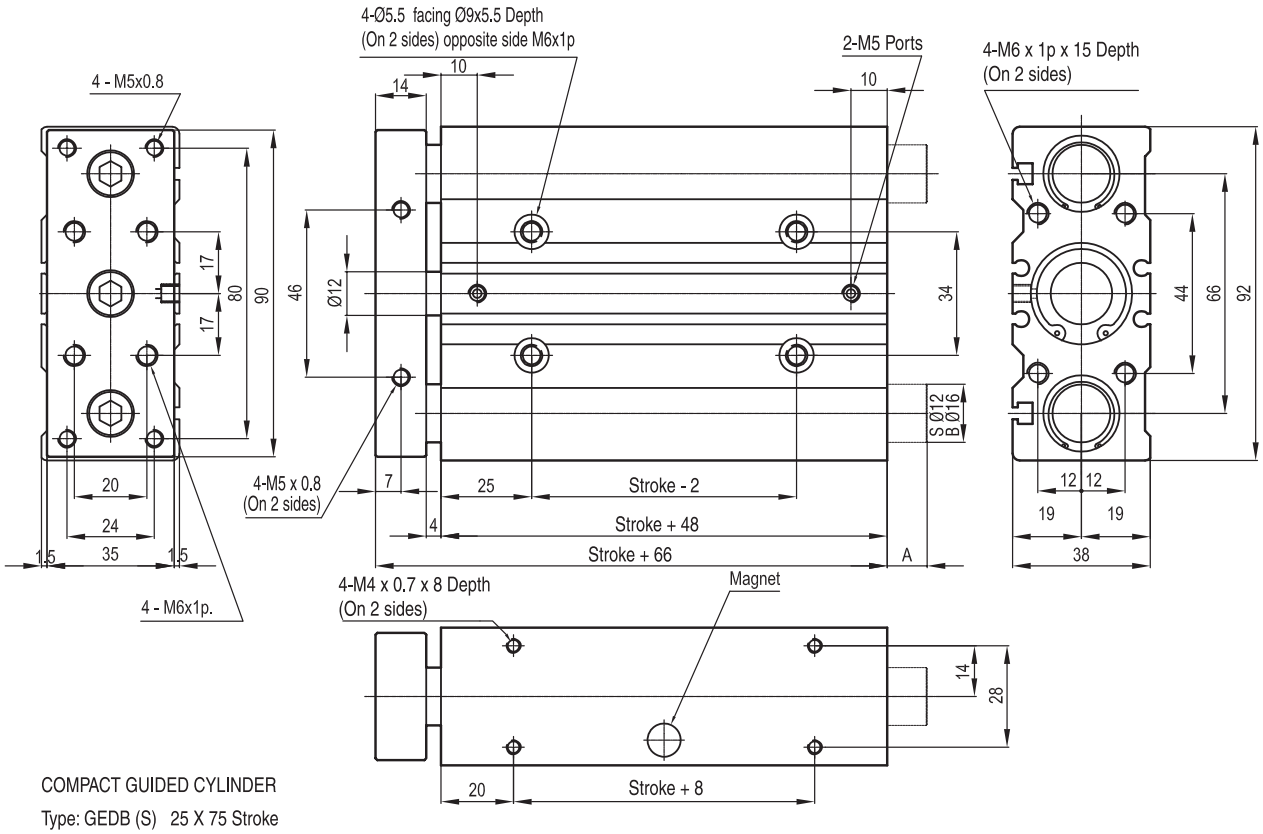

COMPACT GUIDED CYLINDER

Type: GEDB (S) 25 X 75 Stroke

Dimension \ Stroke mm.	25	50	75	100	125	150	175	200
A	0	0	11	11	11	11	11	11

Ø 32

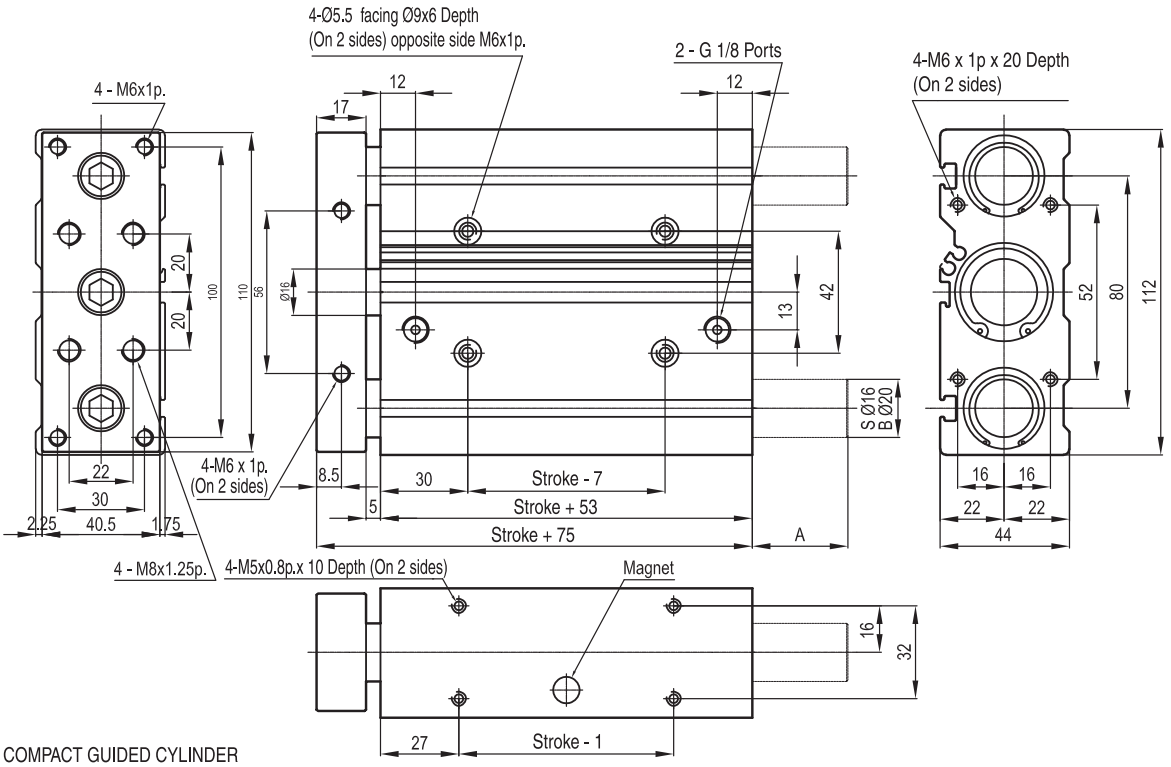

COMPACT GUIDED CYLINDER

Type: GEDB (S) 32 X 75 Stroke

Dimension \ Stroke mm.	30	50	75	100	125	150	175	200	250
A	0	0	33	33	33	33	33	33	33

Ø 40

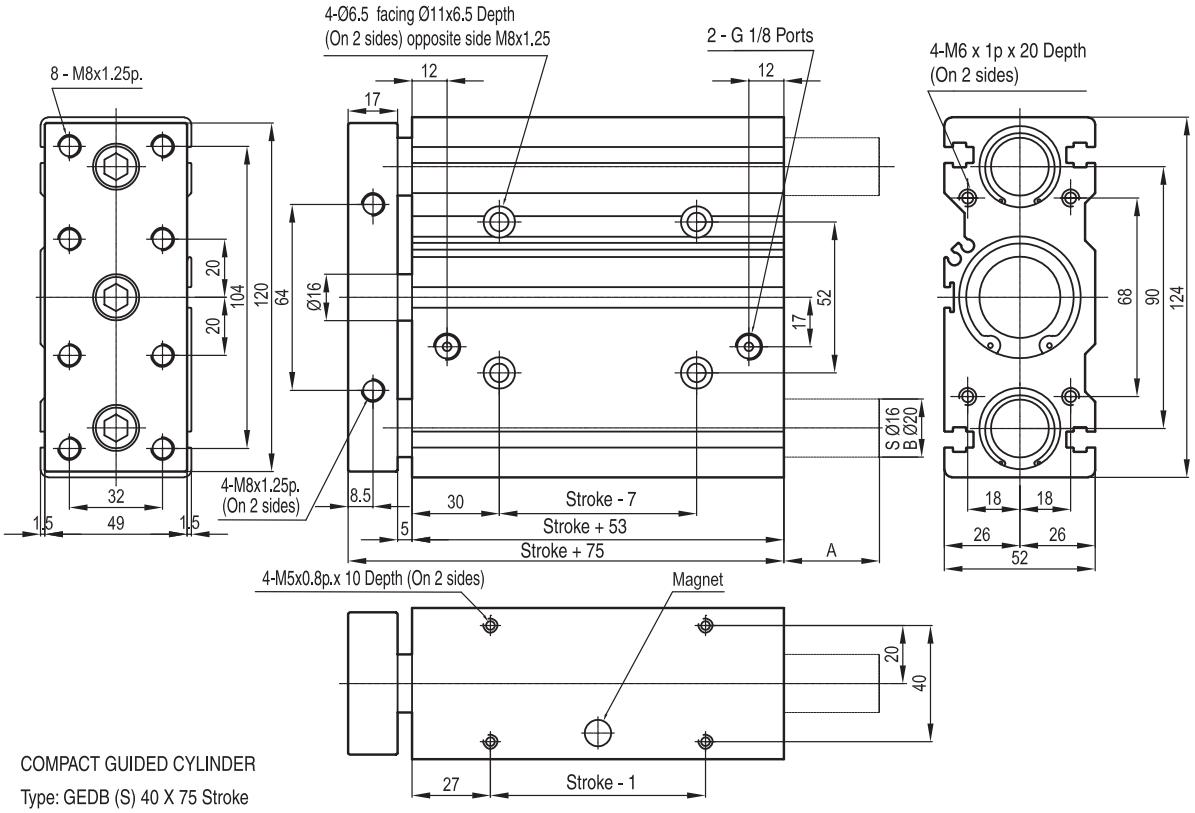

COMPACT GUIDED CYLINDER

Type: GEDB (S) 40 X 75 Stroke

Dimension \ Stroke mm.	30	50	75	100	125	150	135	200	250
A	0	0	33	33	33	33	33	33	33

Ø 50

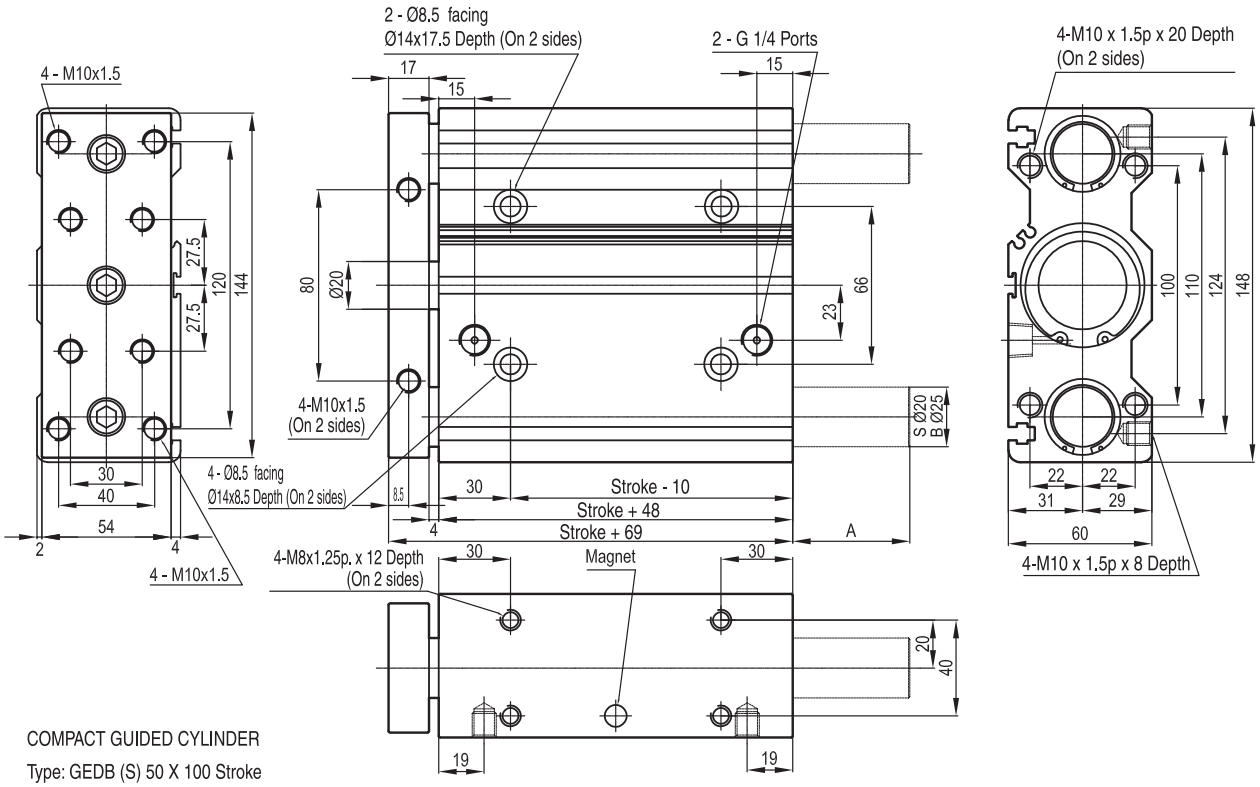

COMPACT GUIDED CYLINDER

Type: GEDB (S) 50 X 100 Stroke

Dimension \ Stroke mm.	30	50	75	100	125	150
A	0	0	0	49	49	49

Ø 63

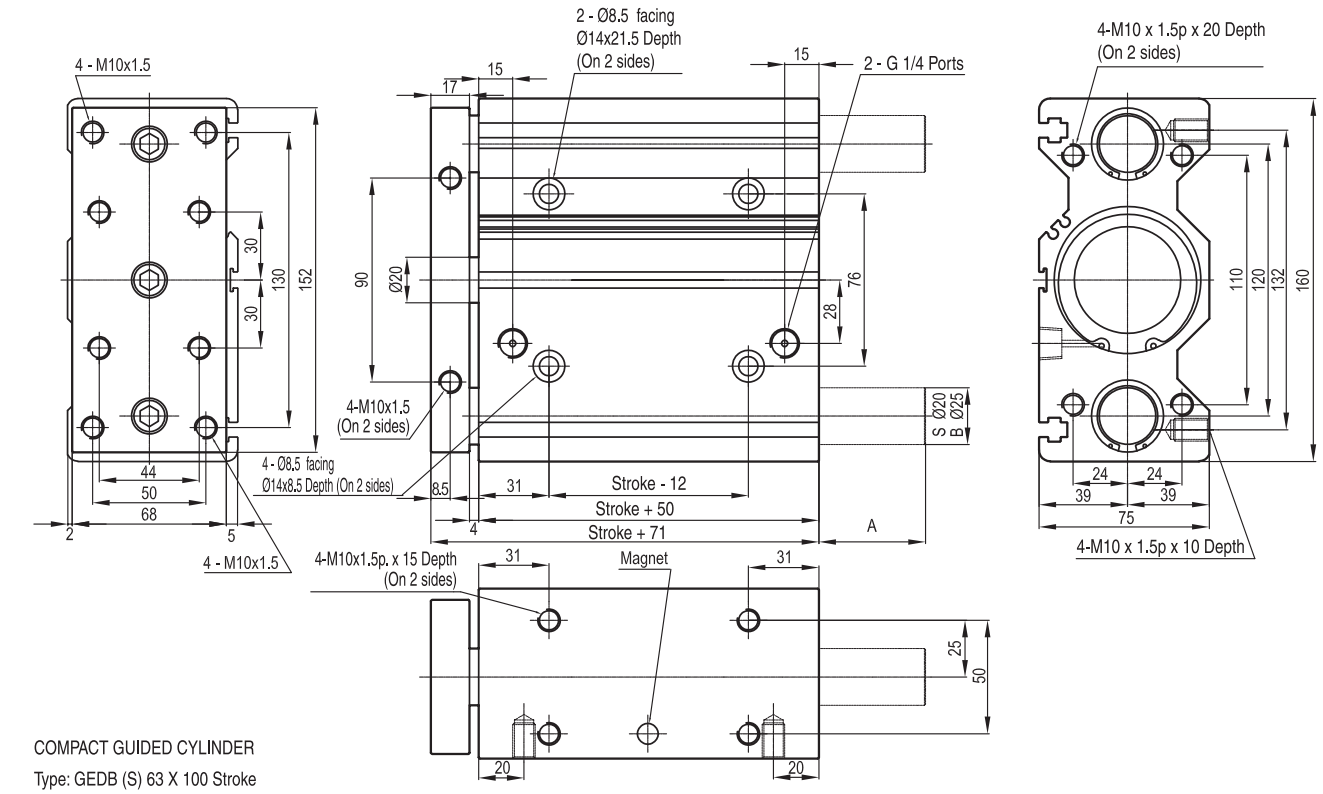

COMPACT GUIDED CYLINDER

Type: GEDB (S) 63 X 100 Stroke

Dimension \ Stroke mm.	30	50	75	100	125	150
A	0	0	0	47	47	47

Standard executions		
Version	Symbol	Type
Standard	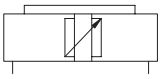	S1
Short (for light loads)	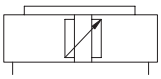	S2



On request, they can be supplied according Directive 94/9/EC - **ATEX**
CE Ex **II 2 GDc T5**

Options		Suffix
Both connections on one head	from bore 25 mm.	U
Carriage with integral brake	(see page 1.26.35)	B
Special versions on request		/ S

The options can be combined (when this is possible).

Rodless cylinders, magnetic as standard.
Cylinders with direct power transmission through the tube slot onto the yoke.
The new cushionings are adjustable at both ends; the flow rate is regulated from 0 to 100% by turning a pin of an angle of 90°.
The new barrel with high resistance to deflection is provided with grooves for fixing various accessories.
The magnetic reed switches are fixed by a bracket.
The short cylinder type S2, in comparison to the standard cylinder - 0 - stroke, is up to 42% shorter; the total fitting length is therefore reduced and the cylinder is more compact and money-saving.
For the magnetic reed switches type ASC see from page 1.110.1.
For mounting accessories see from page 1.26.28.

How to order: 32 / 1000 S1U

32	/	1000	S1	U
Bore	/	Stroke	Type	Option

Technical data	
Fluid	Compressed filtered air with or without lubrication. Lubrication, if be used, must be continous.
Pressure range	2 ÷ 8 bar
Temperature range	-20 °C ÷ + 80°C
Materials	Heads: Anodised aluminium Barrel: Anodised aluminium Seals: Polyurethane - Piston: monobloc/yoke: Aluminium Internal strip: Nylon External strip: Stainless steel AISI 304 Wiper ring: PVC

Bore (mm)	Standard strokes (mm)	Max stroke (mm)	Cushion length (mm)	Theoretical force at 6 bar (N)	Weight at 0 stroke Type S1 (g)	Weight at 0 stroke Type S2 (g)	Weight for every 10 mm stroke (g)
18	from 10 to 6000	9000	15	140	300	200	15
25			18	270	600	400	26
32			24	440	1100	700	36
40			34	680	1800	1200	48
50			40	1060	3200	2000	74
63			49	1680	5600	3200	101

Type: **S1**

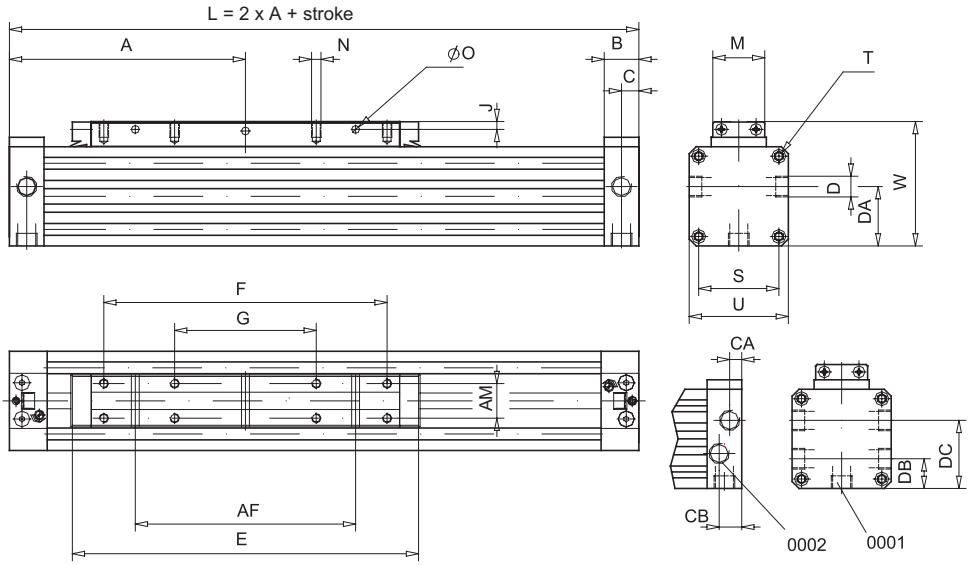

ø mm	A	AF	AM	B	C	CA	D	DA	DB	DC	E	F	G	J	M	N	ø O	□ S	T	□ U	W
18	80	50	10	16,5	6,5	-	M5x6	15,5	-	-	103	75	-	3	15,5	M3x6	3,5	23,5	M3x7	30	39
25	100	70	13	20	8,5	7	1/8”x8	25,5	14	28	131	100	50	3,5	20	M4x7	4,5	33	M4x9	42	53
32	120	100	16	20	8,5	7	1/8”x8	32	16	34,5	171	140	70	4,5	25	M5x9	5,5	41	M5x10	52	65
40	150	140	22	23	12	11	1/4”x12	37,5	18,5	41	220	180	90	5	33	M6x10	7	51	M6x12	63	79
50	180	180	29	23	12	12	1/4”x12	47,5	22,5	47,5	280	220	110	6,5	42	M8x12,5	7	63	M8x12	78	96
63	215	230	40	29	12,5	12,5	3/8”x12	59,5	24,5	59,5	333	280	140	8	54	M8x15	9	78	M8x12	93	113,5

Type: **S2**

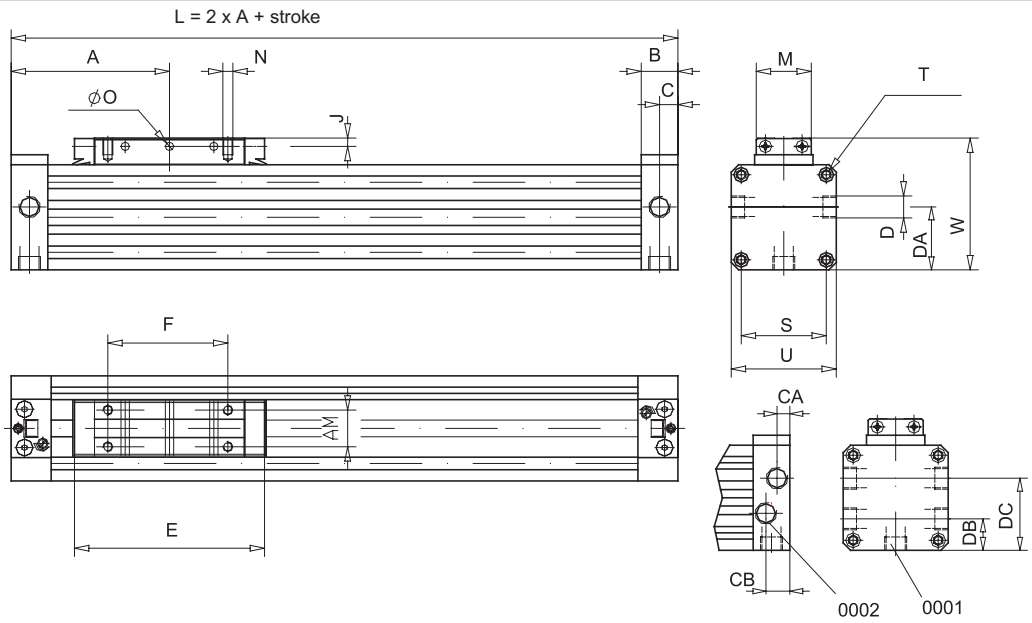

ø mm	A	AM	B	C	CA	CB	D	DA	DB	DC	E	F	J	M	N	ø O	□ S	T	□ U	W
18	57,5	10	16,5	6,5	-	-	M5x5,5	17,5	-	-	58	30	3	15,5	M3x6	3,5	23,5	M3x7	30	39
25	67,5	13	20	8,5	7	13	1/8”x8	25,5	14	28	66	35	3,5	20	M4x7	4,5	33	M4x9	42	53
32	77,5	16	20	8,5	7	13	1/8”x8	32	17,5	34,5	86	55	4,5	25	M5x9	5,5	41	M5x10	52	65
40	95	22	24	11	9,5	14,5	1/4”x12	37,5	20	42	110	70	5	33	M6x10	7	51	M6x12	63	79
50	105	29	24	11	9,5	14,5	1/4”x12	47,5	26	52	130	70	6,5	42	M8x12,5	7	63	M8x12	78	96
63	125	40	30	14,5	11	18,5	3/8”x12,5	59,5	30	62	153	100	8	54	M8x15	9	78	M8x12	93	113,5

1

Standard executions		
Version	Symbol	Type
Guided	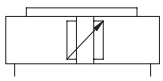	S3
Short guided (for light loads)	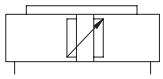	S5
Double guide	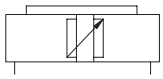	S6

On request, they can be supplied according Directive 94/9/EC - **ATEX**
CE Ex **II 2 GDc T5**



Rodless cylinders, magnetic as standard.
Cylinders with direct power transmission through the tube slot onto the yoke.
The new cushionings are adjustable at both ends; the flow rate is regulated from 0 to 100% by turning a pin of an angle of 90°.
The new barrel is provided with grooves for fixing various accessories. The magnetic reed switches are fixed by a bracket.
The side carriage (which can also be installed at a later date) is adjustable and this allows to use the cylinder with heavier loads; the guide moves by Teflon slides, fixed in the grooves of the tube. The short guided cylinders type S5, in comparison to the standard cylinder - 0 - stroke, is up to 42% shorter; the total fitting length is therefore reduced and the cylinder is more compact and money-saving.

For the magnetic reed switches type ASC see from page 1.110.1.
For mounting accessories see from page 1.26.28.
How to order: 50 / 1000 S6U

50	/	1000	S6	U
Bore	/	Stroke	Type	Option

Options	Suffix
Both connections on one head — from bore 25 mm.	U
Special versions on request	/ S

The options can be combined (when this is possible).

Technical data	
Fluid	Compressed filtered air with or without lubrication. Lubrication, if be used, must be continous.
Pressure range	2 ÷ 8 bar
Temperature range	-20 °C ÷ + 80°C
Materials	Heads: Anodised aluminium Barrel: Anodised aluminium Seals: Polyurethane - Piston: monobloc/yoke: Aluminium Internal strip: Nylon External strip: Stainless steel AISI 304 Wiper ring: PVC Carriage: Aluminium

Bore (mm)	Standard strokes (mm)	Max stroke (mm)	Cushion length (mm)	Theoretical force at 6 bar (N)	Weight at 0 stroke Type S3 (g)	Weight at 0 stroke Type S5 (g)	Weight at 0 stroke Type S6 (g)	Weight for every 10 mm stroke (g)
18	from 10 to 6000	9000	15	140	400	250	500	15
25			18	270	900	550	1200	26
32			24	440	1500	1100	1900	36
40			34	680	2800	1700	3800	48
50			40	1060	4900	2850	6600	74
63			49	1680	8000	4400	10400	101

Type: **S3**

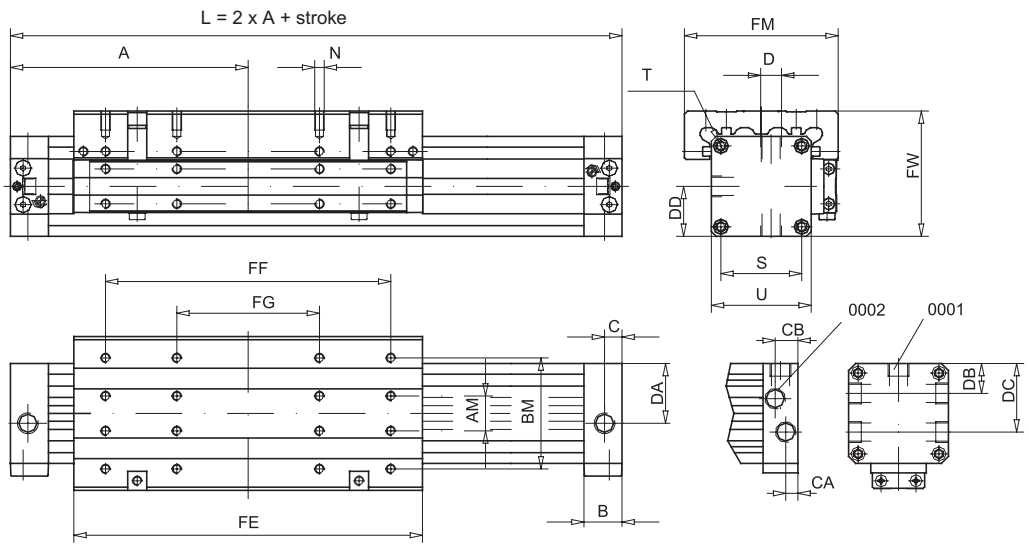

ø mm	A	AM	B	BM	C	CA	CB	D	DA	DB	DC	DD	FE	FF	FG	FM	FW	N	□ S	T	□ U
18	80	10	16,5	35	6,5	-	-	M5x6	17,5	-	-	15	103	75	-	50	39	M4x7,5	23,5	M3x7	30
25	100	13	20	45	8,5	7	13	1/8”x8	25,5	14	28	21	131	100	50	66	53	M4x8	33	M4x9	42
32	120	16	20	55	8,5	7	13	1/8”x8	32	17,5	34,5	26	171	140	70	80	65	M5x10	41	M5x10	52
40	150	22	24	70	11	9,5	14,5	1/4”x12	37,5	20	42	31,5	220	180	90	97	79	M6x12	51	M6x12	63
50	180	29	24	85	11	9,5	14,5	1/4”x12	47,5	26	52	39	280	220	110	116	96	M8x16	63	M8x12	78
63	215	40	30	105	14,5	11	18,5	3/8”x12	59,5	30	62	46,5	333	280	140	136	113,5	M8x16	78	M8x12	93

Type: **S5**

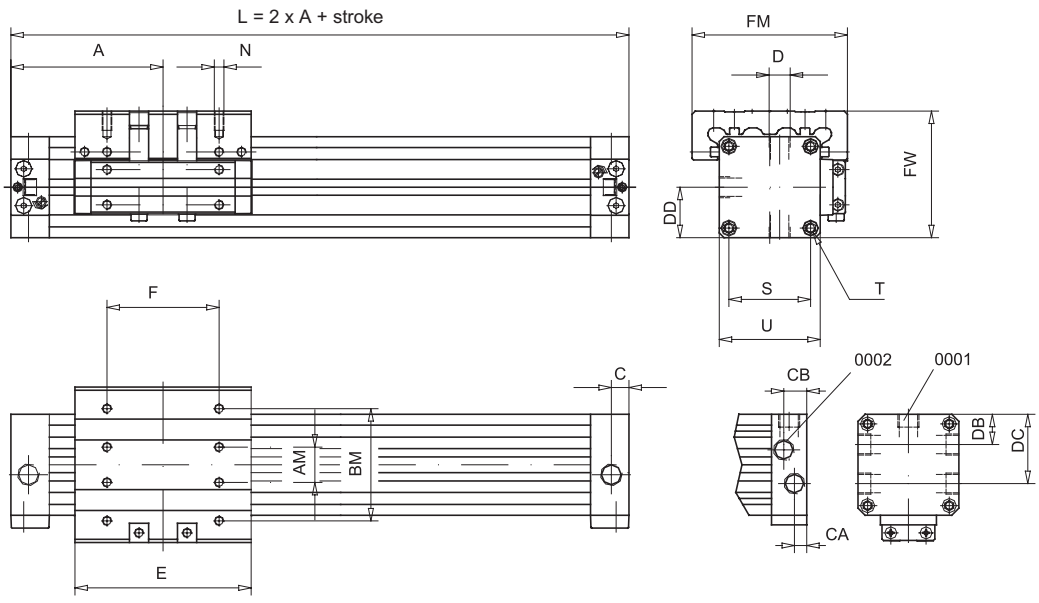

ø mm	A	AM	B	BM	C	CA	CB	D	DA	DB	DC	DD	E	F	FM	FW	N	□ S	T	□ U
18	57,5	10	16,5	35	6,5	-	-	M5x6	17,5	-	-	15	58	30	50	39	M4x7,5	23,5	M3x7	30
25	67,5	13	20	45	8,5	7	13	1/8”x8	25,5	14	28	21	66	35	66	53	M4x8	33	M4x9	42
32	77,5	16	20	55	8,5	7	13	1/8”x8	32	17,5	34,5	26	86	55	80	65	M5x10	41	M5x10	52
40	95	22	24	70	11	9,5	14,5	1/4”x12	37,5	20	42	31,5	110	70	97	79	M6x12	51	M6x12	63
50	105	29	24	85	11	9,5	14,5	1/4”x12	47,5	26	52	39	130	70	116	96	M8x16	63	M8x12	78
63	125	40	30	105	14,5	11	18,5	3/8”x12,5	59,5	30	62	46,5	153	100	136	113,5	M8x16	78	M8x12	93

Type: **S6**

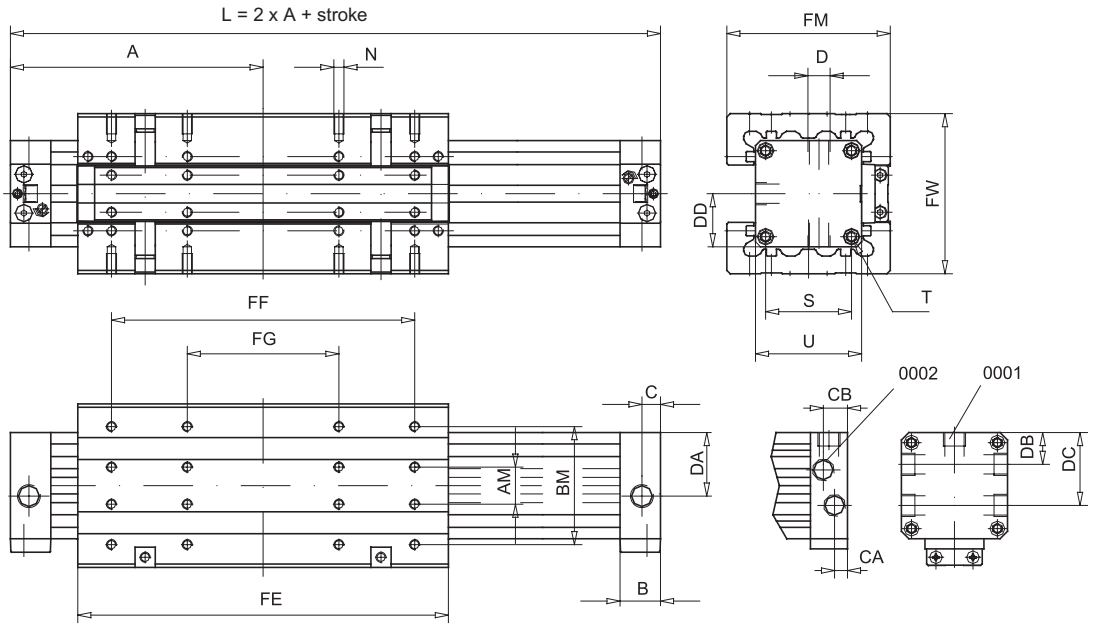

ø mm	A	AM	B	BM	C	CA	CB	D	DA	DB	DC	DD	FE	FF	FG	FM	FW	N	□ S	T	□ U
18	80	10	16,5	35	6,5	-	-	M5x6	17,5	-	-	15	103	75	-	50	48	M4x7,5	23,5	M3x7	30
25	100	13	20	45	8,5	7	13	1/8”x8	25,5	14	28	21	131	100	50	66	64	M4x8	33	M4x9	42
32	120	16	20	55	8,5	7	13	1/8”x8	32	17,5	34,5	26	171	140	70	80	78	M5x10	41	M5x10	52
40	150	22	24	70	12	9,5	14,5	1/4”x12	37,5	20	42	31,5	220	180	90	97	95	M6x12	51	M6x12	63
50	180	29	24	85	12	9,5	14,5	1/4”x12	47,5	26	52	39	280	220	110	116	114	M8x16	63	M8x12	78
63	215	40	30	105	12,5	11	18,5	3/8”x12	59,5	30	62	46,5	333	280	140	136	134	M8x16	78	M8x12	93

For parameters of the loads and moments see from page 1.26.25.
For seal kits see from page 1.26.21.

Notes

GENERAL INDEX CILINDERS INDEX

Standard executions			
Version		Symbol	Type
Parallel	from bore 25 mm.	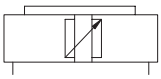	S4

On request, they can be supplied according Directive 94/9/EC - **ATEX**
CE Ex II 2 GDc T5



1

Rodless cylinders, standard in the magnetic version.
Cylinders with direct power transmission through the tube slot onto the yoke.
The new cushionings are adjustable at both ends; the flow rate is regulated from 0 to 100% by turning a pin of an angle of 90°.
The new barrel is provided with grooves for fixing various accessories. The magnetic reed switches are fixed by a bracket.
They are fit for heavy loads and moments in every direction; they are double action force cylinders provided with central air connections. Should it be necessary, linear guides can also be applied at a later date (special application). The yokes are provided with front and side wiper strips.
For the magnetic reed switches type ASC see from page 1.110.1.
For mounting accessories see from page 1.26.28.

Options	Suffix
Special versions on request	/ S

How to order: 50 / 500 S4

50	/	500	S4	
Bore	/	Stroke	Type	Option

Technical data		
Fluid	Compressed filtered air with or without lubrication. Lubrication, if be used, must be continous.	
Pressure range	2 ÷ 8 bar	
Temperature range	-20 °C ÷ + 80°C	
Materials	Heads:	Anodised aluminium
	Barrel:	Anodised aluminium
	Seals:	Polyurethane - Piston monobloc/yoke: Aluminium
	Internal strip:	Nylon
	External strip:	Stainless steel AISI 304
	Wiper ring:	PVC
	Coupling plate:	Aluminium

Bore (mm)	Standard strokes (mm)	Max stroke (mm)	Cushion length (mm)	Theoretical force at 6 bar (N)	Weight at 0 stroke Type S4 (g)	Weight for every 10 mm stroke (g)
25	from 10 to 6000	9000	18	540	1200	52
32			24	880	2600	72
40			34	1360	4600	98
50			40	2120	8200	150
63			49	3360	13600	204

Type: **S4**

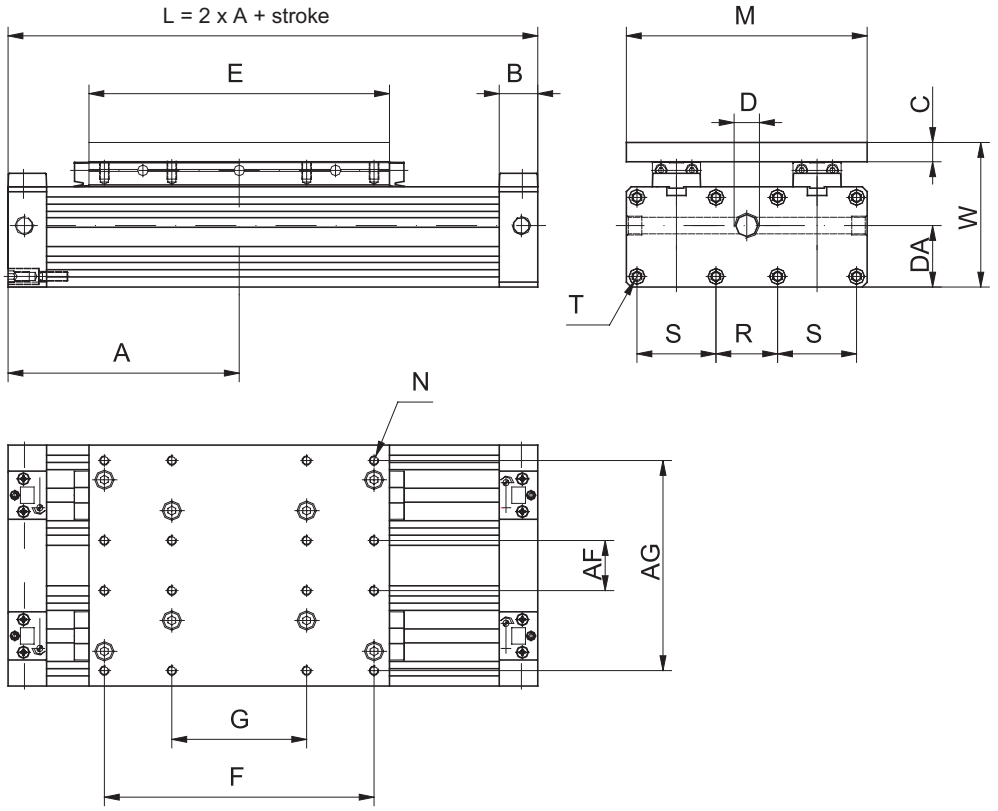

ø mm	A	B	C	D	DA	E	F	G	AF	AG	M	N	R	S	T	W
25	100	20	8	1/4”x11,7	25,5	116	100	50	21	79	92	M4	17	33x33	M4x9	61
32	120	20	10	1/4”x11,7	40	156	140	70	26	109	125	M5	32	41x41	M5x10	75
40	150	24	12	3/8”x11,7	47	200	180	90	35	133	153	M6	45	51x51	M6x12	91
50	180	24	16	3/8”x11,7	59	260	220	110	44	164	184	M8	43	63x63	M8x12	112
63	215	30	16	1/2”x13	71	313	280	140	55	195	218	M8	47	78x78	M8x12	129,5

Seal kit
Here are the quantities and the description of the components comprised in each kit.

Description	N°	S1	S2	S3	S4 *	S5	S6 **
Front wiper rings	2	●	●	●	●	●	●
Side wiper rings	2	●	●	●	●	●	●
Piston seals	2	●	●	●	●	●	●
Cushionings seals	2	●	●	●	●	●	●
Heads o-ring	2	●	●	●	●	●	●
Cushioning pin 0-ring	2	●	●	●	●	●	●
▲ Internal strip	1	●	●	●	●	●	●
▲ External strip	1	●	●	●	●	●	●
▲ Internal seals (between the strip and the tube)	2	●	●	●	●	●	●
Teflon slides for guide	2			●		●	●

* For the type S4 (parallel) one seal kit includes twice as many as the components are.
** For the type S6 (double guide) one seal kit includes 4 Teflon slides.

▲ The length is according to the stroke of the cylinder.

How to order: 32 / 500 / SG / S4

32	/	500	/	SG	/	S4	
Bore	/	Cylinder stroke	/	Series of seals	/	Type	Option

GENERAL INDEX CILINDERS INDEX

All data concerning forces refer to a speed of V < 0,35 m/s.
Keeping the indicated values ensures the maximum service life, the minimum noise and the best operating result.
Higher speeds reduce the admissible forces.
Were the working conditions out of the allowed limits (see table below), the energy of the mass in motion should be absorbed by devices (such as hydraulic cushionings, stops) mounted as much nearer as possible to the barycentre of the mass.

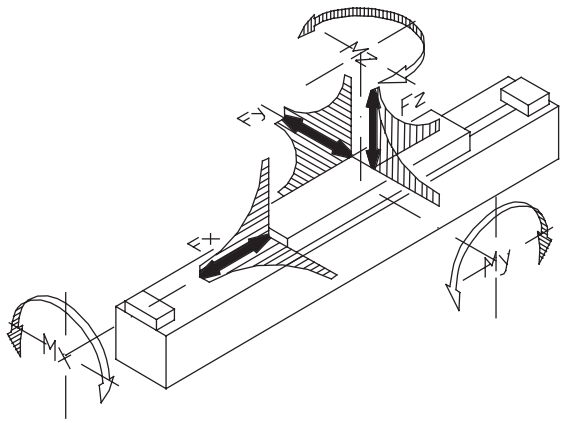

Type: **S1**

ø mm	Force (V_{max} ≤ 0,35 m/s)			F (load in N)			Moments		
	Fx (N) 6 bar	Fy (N) 6 bar	Fz (N) 6 bar	at 0,75 m/s	at 1 m/s	at 1,5 m/s	Mx (Nm) Fy/Fz	My (Nm) Fx/Fz	Mz (Nm) Fx/Fy
18	140	80	300	80	40	20	1	3	3
25	270	110	480	155	90	40	2	13	13
32	440	165	650	280	155	70	3,5	25	25
40	680	225	800	500	290	125	5,5	40	40
50	1060	325	1060	790	420	195	10	65	65
63	1680	435	1680	1500	850	370	16	100	100

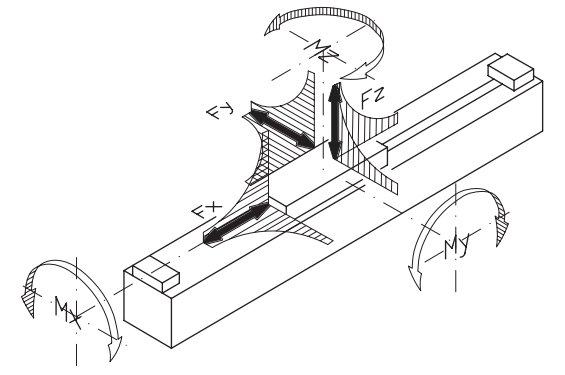

Type: **S2**

ø mm	Force (V_{max} ≤ 0,35 m/s)			F (load in N)			Moments		
	Fx (N) 6 bar	Fy (N) 6 bar	Fz (N) 6 bar	at 0,75 m/s	at 1 m/s	at 1,5 m/s	Mx (Nm) Fy/Fz	My (Nm) Fx/Fz	Mz (Nm) Fx/Fy
18	140	40	140	40	25	10	0,4	1,7	1,7
25	270	55	230	90	50	25	0,7	2,7	2,7
32	440	70	320	200	110	45	1	5	5
40	680	100	400	420	240	110	2	8,5	8,5
50	1060	140	480	750	440	190	3,5	13	13
63	1680	180	590	1500	850	380	5	18	18

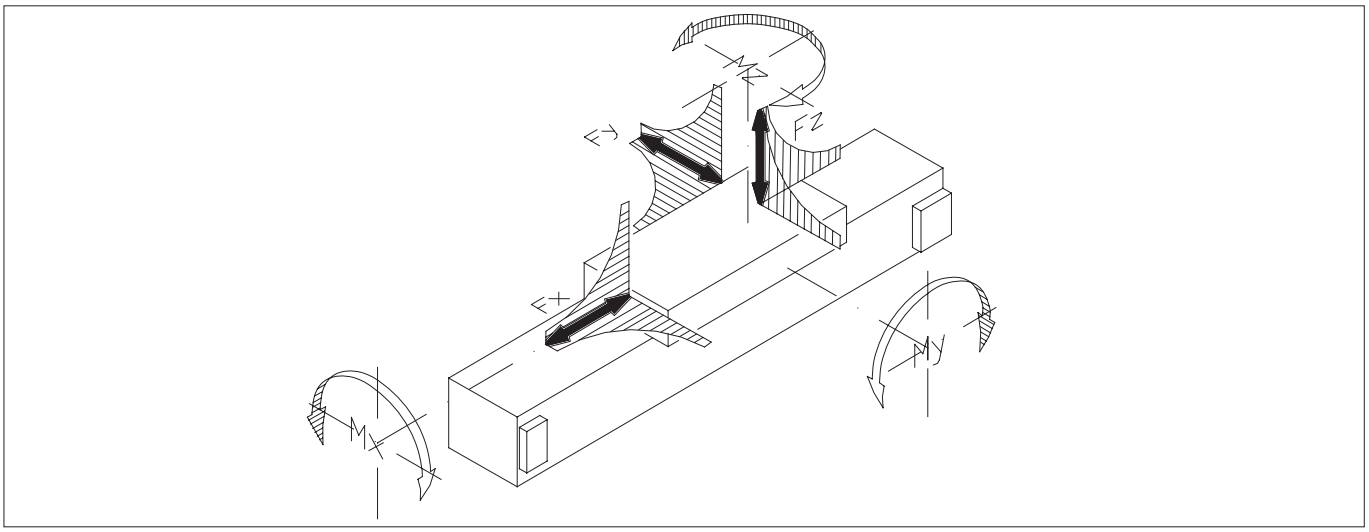

Type: **S3**

ø mm	Force ($V_{max} \leq 0,35$ m/s)			F (load in N)			Moments		
	Fx (N) 6 bar	Fy (N) 6 bar	Fz (N) 6 bar	at 0,75 m/s	at 1 m/s	at 1,5 m/s	Mx (Nm) Fy/Fz	My (Nm) Fx/Fz	Mz (Nm) Fx/Fy
18	140	370	370	100	58	26	3,5	6	6
25	270	800	800	280	160	65	10	20	20
32	440	1200	1200	510	300	140	25	45	45
40	680	1600	1600	1000	550	250	40	75	75
50	1060	2100	2100	1500	850	380	80	150	150
63	1680	2800	2800	2500	1400	610	110	250	250

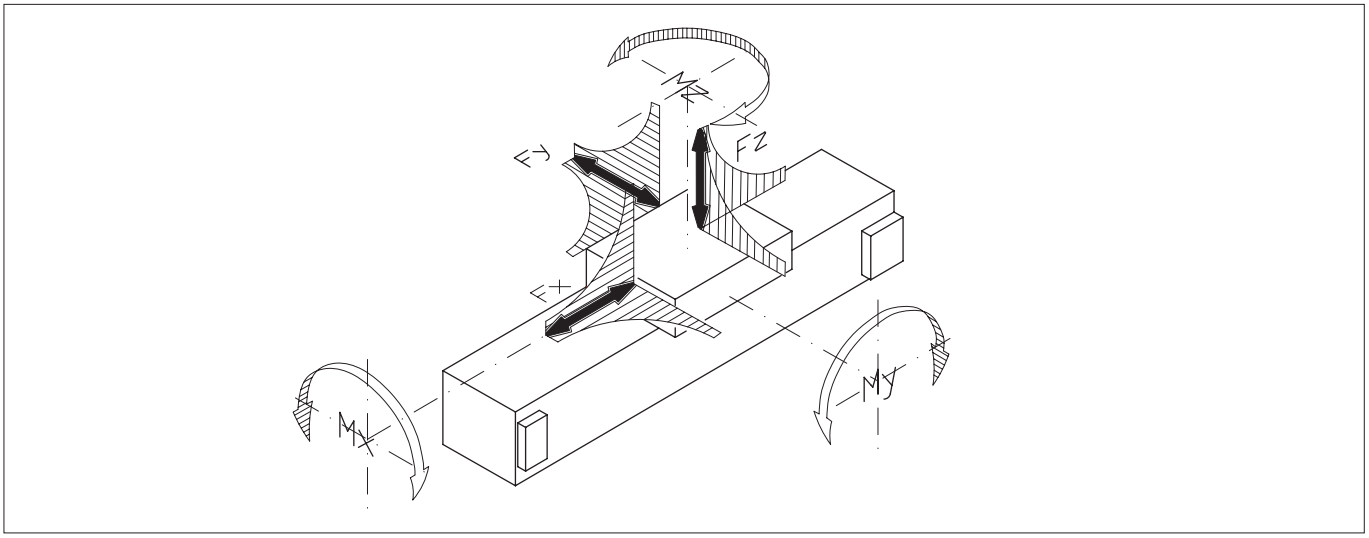

Type: **S5**

ø mm	Force ($V_{max} \leq 0,35$ m/s)			F (load in N)			Moments		
	Fx (N) 6 bar	Fy (N) 6 bar	Fz (N) 6 bar	at 0,75 m/s	at 1 m/s	at 1,5 m/s	Mx (Nm) Fy/Fz	My (Nm) Fx/Fz	Mz (Nm) Fx/Fy
18	140	150	150	50	30	12	1,8	1,8	1,8
25	270	250	250	100	60	30	4	4	4
32	440	450	450	250	135	65	10	10	10
40	680	600	600	480	280	140	16	16	16
50	1060	900	900	800	480	220	30	30	30
63	1680	1100	1100	1500	950	400	45	45	45

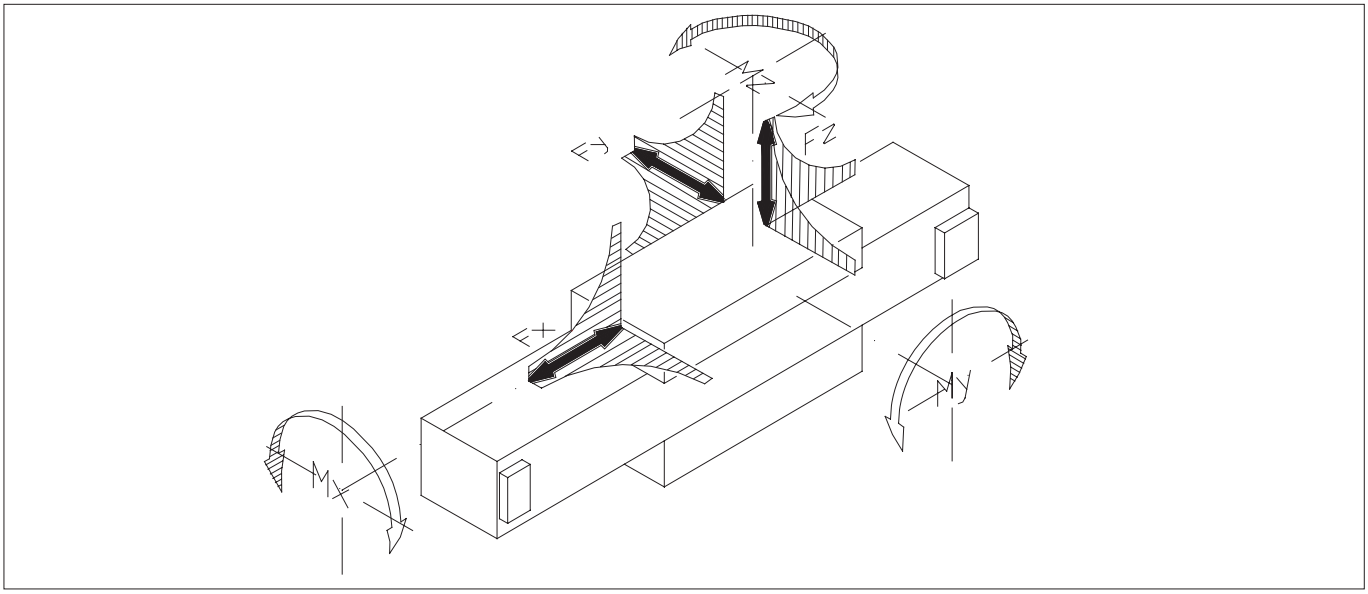

Type: **S6**

ø mm	Force ($V_{max} \leq 0,35$ m/s)			F (load in N)			Moments		
	Fx (N) 6 bar	Fy (N) 6 bar	Fz (N) 6 bar	at 0,75 m/s	at 1 m/s	at 1,5 m/s	Mx (Nm) Fy/Fz	My (Nm) Fx/Fz	Mz (Nm) Fx/Fy
18	140	550	550	150	80	20	5,2	9	9
25	270	1200	1200	420	210	80	15	30	30
32	440	1800	1800	750	400	170	37	67	67
40	680	2400	2400	1500	750	300	60	110	110
50	1060	3200	3200	2200	1150	460	120	220	220
63	1680	4200	4200	3700	1900	740	170	370	370

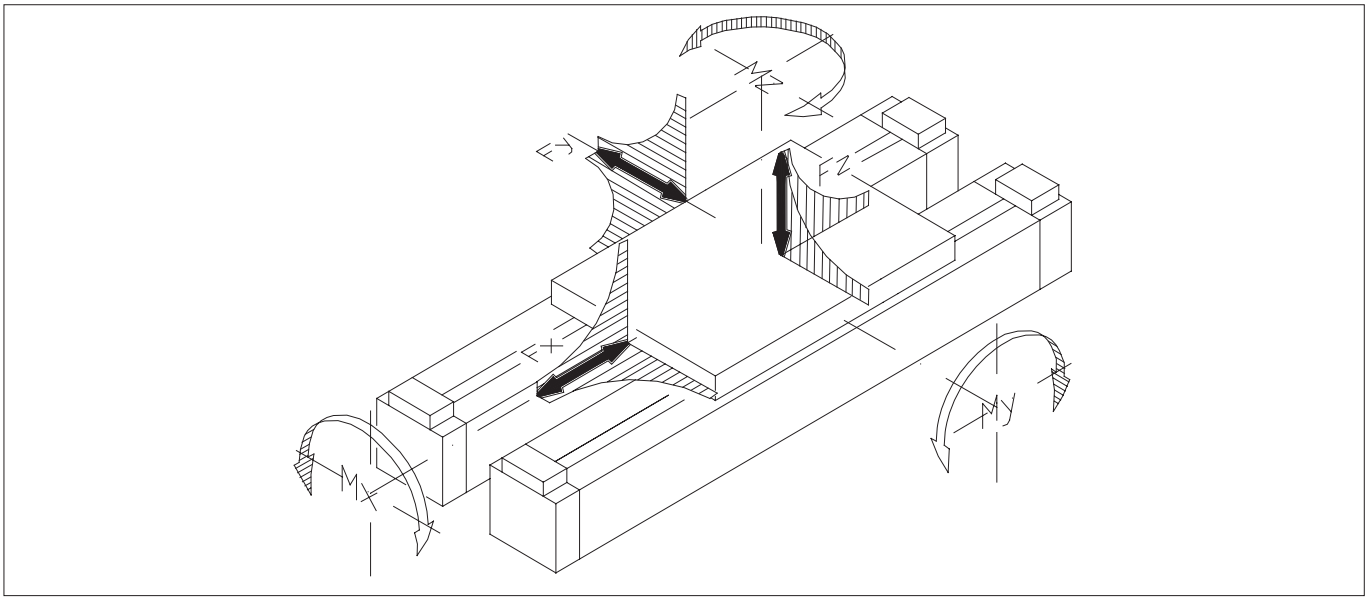

Type: **S4**

ø mm	Force ($V_{max} \leq 0,35$ m/s)			F (load in N)			Moments		
	Fx (N) 6 bar	Fy (N) 6 bar	Fz (N) 6 bar	at 0,75 m/s	at 1 m/s	at 1,5 m/s	Mx (Nm) Fy/Fz	My (Nm) Fx/Fz	Mz (Nm) Fx/Fy
32	880	360	1220	540	300	130	29	52	52
40	1360	540	1750	1090	620	280	55	88	88
50	2120	750	2500	1760	1000	450	90	155	155
63	3360	1000	3300	2900	1660	720	148	260	260

Foot type: **P**

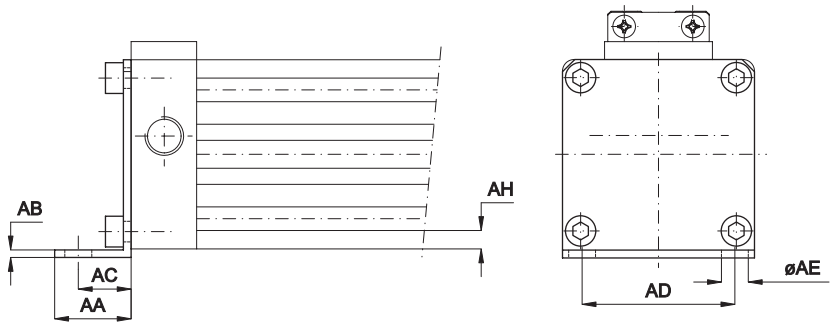

The feet can be mounted on the cylinder in all the 4 possible positions.
The kit includes 2 feet and 8 bolts. Material: Anodised aluminium.

Code	Item	ø mm	AA	AB	AC	AD	AE	AH
559010	P18S	18	15	2	10	20	6	2
559011	P25S	25	18	2	12,5	30	6	2
559012	P32S	32	20	2,5	13,5	40	7	3
559013	P40S	40	25	2,5	17,5	50	9	3
559014	P50S	50	28	3	20	60	9	3
559015	P63S	63	30	3	21	75	11	4,5

Mid support type: **SI**

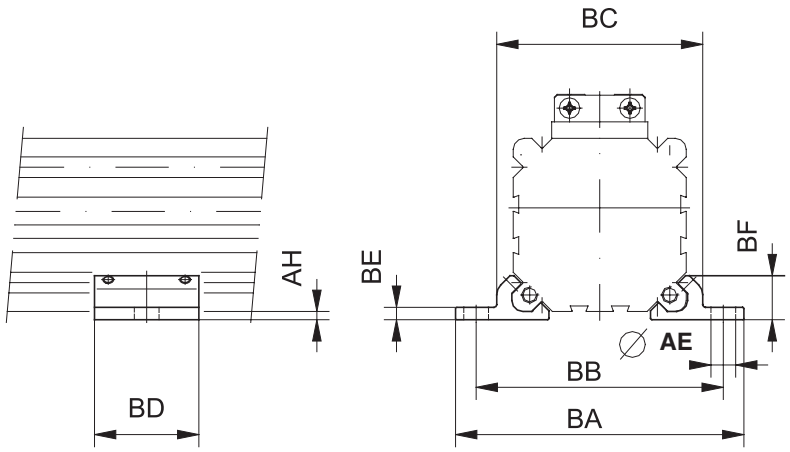

The mid support must be used in case of deflection of the cylinder (see page 1.26.40).
The mid support can be used instead of the foot. It is advisable to install it at the end of the cylinder and to secure it against any sideways drift of the cylinder by means of 2 bolts with washers that are screwed in at the front.
The kit includes 2 mid supports and 8 bolts. Material: Anodised aluminium.

Code	Item	ø mm	AE ø	AH	BA	BB	BC	BD	BE	BF
559020	SI18S	18	6	2	56	46	36,5	23	2,5	8,25
559021	SI25S	25	6	2	70	60	50	28	3,5	11
559022	SI32S	32	7	3	85	73	61,5	33	4	13,8
559023	SI40S	40	9	3	105	90	75	38	4,5	16
559024	SI50S	50	9	3	122	106	91	43	5	19
559025	SI63S	63	11	4,5	144	125	107	48	6	22

Light flexible coupling type: **CL**

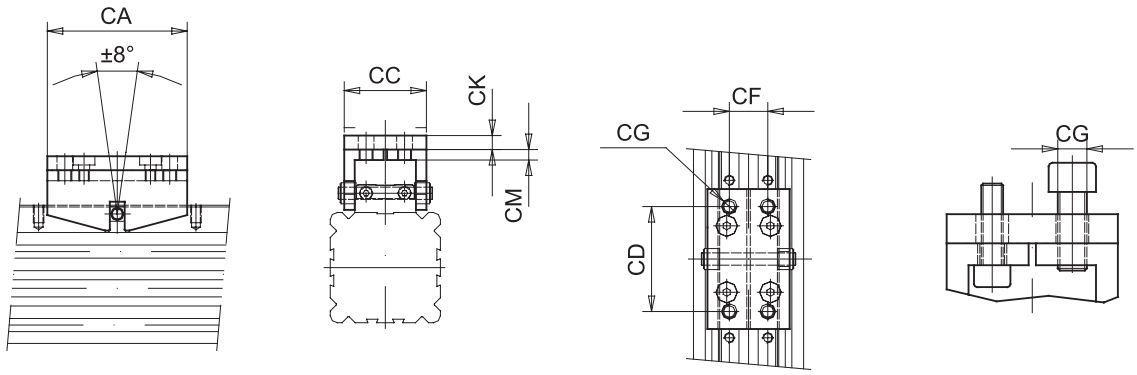

The light flexible coupling can be mounted where a guide must be connected to a rodless cylinder.
The light flexible coupling transfers the action power to the guiding element without any tension.
The kit includes 1 flexible coupling, 1 pin, 1 seeger, 2 distancers. Material: Anodised aluminium.

Code	Item	ø mm	CA	CC	CD	CF	CG	CK	CM
559038	CL18S	18	50	25,5	30	9	M5	4	4
559037	CL25S	25	60	30	40	14	M5	4	4
559032	CL32S	32	70	37	50	16	M6	6	6
559033	CL40S	40	80	47	60	22	M8	8	8
559034	CL50S	50	90	56	70	30	M8	8	8
559035	CL63S	63	100	73	80	40	M10	8	8

Heavy flexible coupling type: **C**

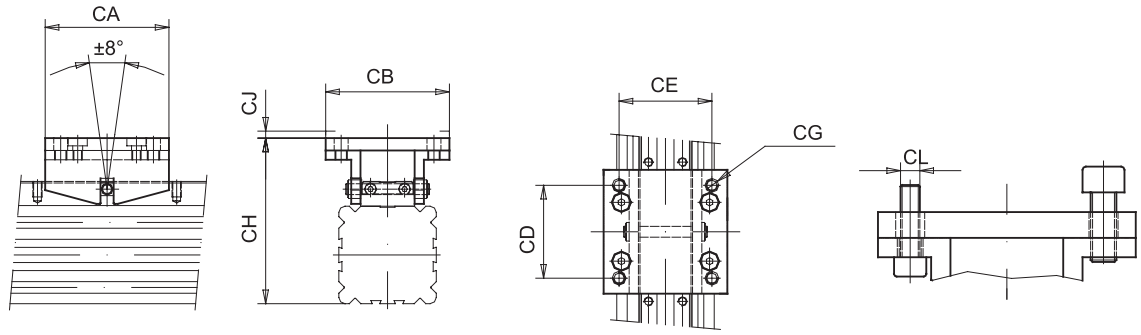

The heavy flexible coupling works as the light ones but can be used with higher forces.
The kit includes 1 flexible coupling, 1 pin, 1 seeger, 2 distancers. Material: Anodised aluminium.

Code	Item	ø mm	CA	CB	CD	CE	CG	CH	CJ	CL
559001	C18S	18	50	41,5	30	34	M5	54	2,5	M4
559002	C25S	25	60	50	40	38	M5	70	3	M4
559003	C32S	32	70	60	50	48	M6	86	3,5	M5
559004	C40S	40	80	80	60	60	M8	107	4,5	M6
559005	C50S	50	90	95	70	70	M8	123	4,5	M6
559006	C63S	63	100	120	80	80	M10	145,5	5	M8

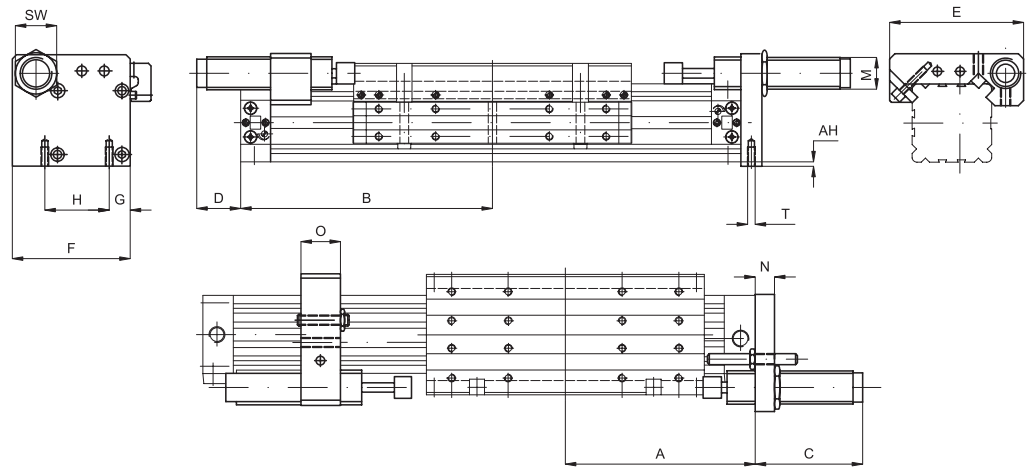

Support for hydraulic cushioning

Type: **SID**
Mid support for shock absorber

Type: **STD**
End support for shock absorber with adjustable mechanical brake unit

Code	Item	ø	A		AH	B		C	D	E	F	G	H	M	N	O	SW	T	Code	Item
		mm	S_1	S_2		S_1	S_2		max											
559060	SID18S	18	80	57,5	2	-	-	-	-	-	-	-	-	-	-	-	-	-	559070	STD18S
559061	SID25S	25	100	67,5	2	117,5	85	37	40	72	57	12,5	33	M14x1,5	10	20	17	M4x10	559071	STD25S
559062	SID32S	32	120	77,5	3	135,5	90	70	30	84	70	14,5	41	M14x1,5	12	20	17	M5x12	559072	STD32S
559063	SID40S	40	150	95	3	165	110	65	50	105	93	16	51	M25x1,5	15	30	32	M6x15	559073	STD40S
559064	SID50S	50	180	105	3	195	140	80	65	126	102	22,5	63	M25x1,5	15	30	32	M8x20	559074	STD50S
559065	SID63S	63	215	125	4,5	-	-	-	-	-	-	-	-	-	-	-	-	-	559075	STD63S

Carriage with integral brake B option

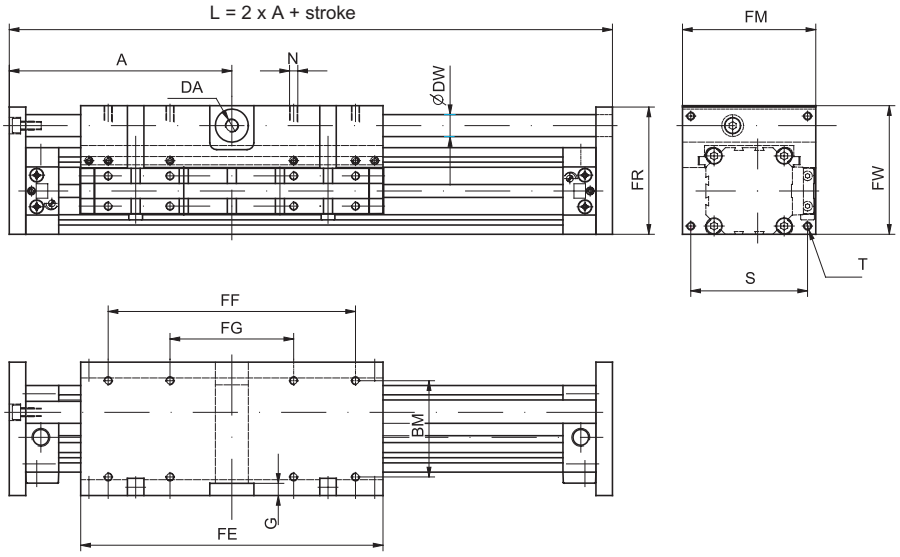

Should it be necessary to lock a working or a handling, the carriage with integral brake can be used.
Materials: carriage: Aluminium; rod: Hardened and chrome plated steel.

ø mm	A	BM	D	DA	DW	FE	FF	FG	FM	FW	FR	G	N	S	T	U	Fb
18	86	35	M5-5,5	M5	ø 6	103	75	-	50	48	47	6	M4-7,5	42	M3	6	180N
25	110	45	1/8"-7,7	M5	ø 12	131	100	50	66	67	66	-	M4-8	54	M4	10	600N
32	130	55	1/8"-7,7	M5	ø 12	171	140	70	80	79	78	5	M5-10	68	M5	10	600N
40	162	70	1/4"-11,7	1/8"	ø 16	220	180	90	97	93,5	92,5	-	M5-12	80	M6	12	1000N
50	195	85	1/4"-11,7	1/8"	ø 20	280	220	110	116	11,5	114,5	-	M8-16	100	M8	15	1400N
63	230	105	3/8"-11,7	1/8"	ø 25	333	280	140	136	139	138	-	M8-16	120	M8	15	2500N

Bracket for the mounting of the magnetic reed switches type: **AS55** (code 559050)

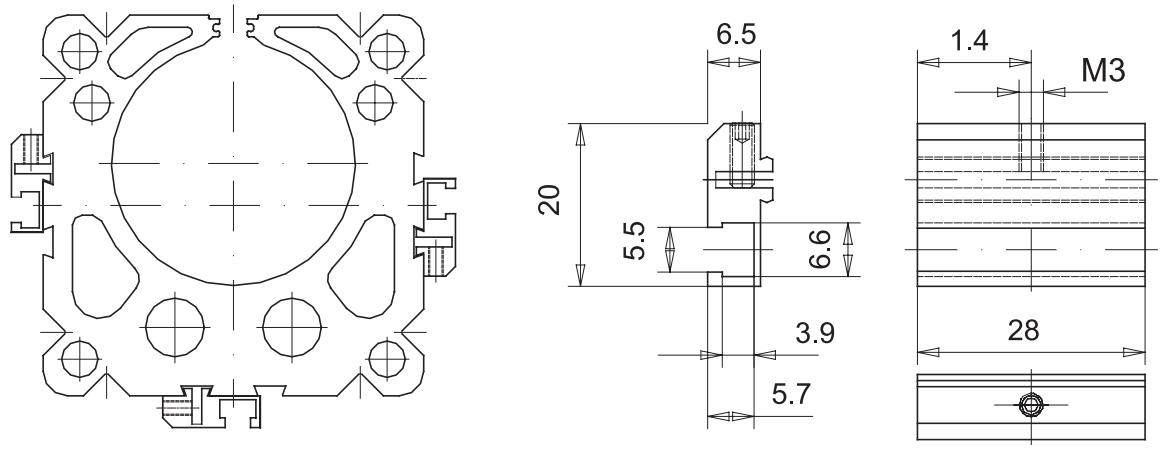

This bracket for the mounting of the magnetic reed switch (see page 1.110.1) can be used on all the diameters and types of rodless cylinders.

Maximum admissible deflections

Fz at deflection of 0,5 mm.

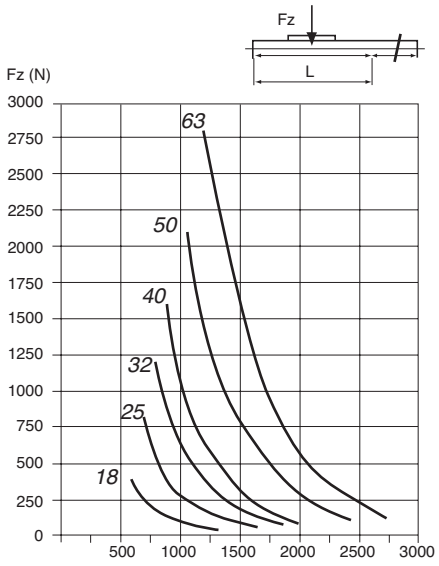

L distance (mm)

Fz at deflection of 1 mm.

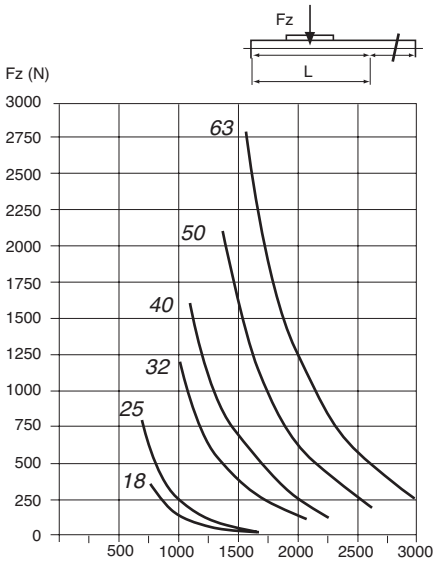

L distance (mm)

With cylinders of long strokes or heavy loads, you should pay attention to the tube deflection.
One or more mid supports can be used according to the amount of deflection.

Example: When applying a force Fz of 500 N a cylinder 25 mm should deflect by a maximum of 0,5 mm and be no longer than 750 mm as according to the diagram.
Should you exceed 750 mm use one or more mid supports (see page 1.26.28).

Notes

GENERAL INDEX CILINDERS INDEX

1

Standard executions		
Version	Symbol	Type
Male pinion	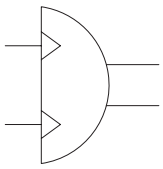	CR
Female pinion		CRF
Male pinion with rotation angle adjustment	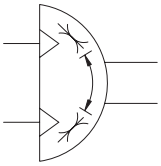	CRR
Female pinion with rotation angle adjustment		CRRF



Rotary cylinders with rack / pinion, magnetic as standard.
The standard cylinders are provided with adjustable cushionings at both ends.
One or more magnetic reed switches can be applied to.
For the magnetic reed switches type ASV see from page 1.110.1.

Options		Suffix
Seals FKM	max 150 °C	V
Special versions on request		/ S

The options can be combined (when this is possible)

How to order: 63 / 90° CRV

63	/	90°	CR	V
Bore	/	Rotation angle	Type	Option

Technical data	
Fluid	Compressed filtered air with or without lubrication. Lubrication, if be used, must be continous.
Pressure range	1 ÷ 12 bar
Temperature range	-20 °C ÷ + 80°C
Materials	Heads: Die-cast aluminium Barrel: Anodised aluminium Pinion/Rack: Chrome plated steel C40 Body: Anodised aluminium Seals: Nitrile rubber (NBR) - Piston: monobloc

Bore (mm)	Standard rotation	Maximum rotation	Moments (Nm)			
			3 bar	6 bar	9 bar	12 bar
32	90°, 180°, 360°	360°	3,7	7	11	14
40			7,5	15	20	30
50			12	25	32	45
63			25	50	80	100
80			40	80	130	160
100			90	190	270	360
125			135	270	400	520

Seal kit
Here are the quantities and the description of the components comprised in each kit.

Description	N°	CR - CRF - CRR -CRRF
Magnetic one piece piston	2	●
Tube o-ring	4	●
Cushioning seal	2	●

How to order: 80 / SG / CRV

80	/	SG	/	CR	V
Bore	/	Series of seals	/	Type	Option

The seal kit for the cylinders in non-standard execution is to be composed according to the options.

Basic drawing

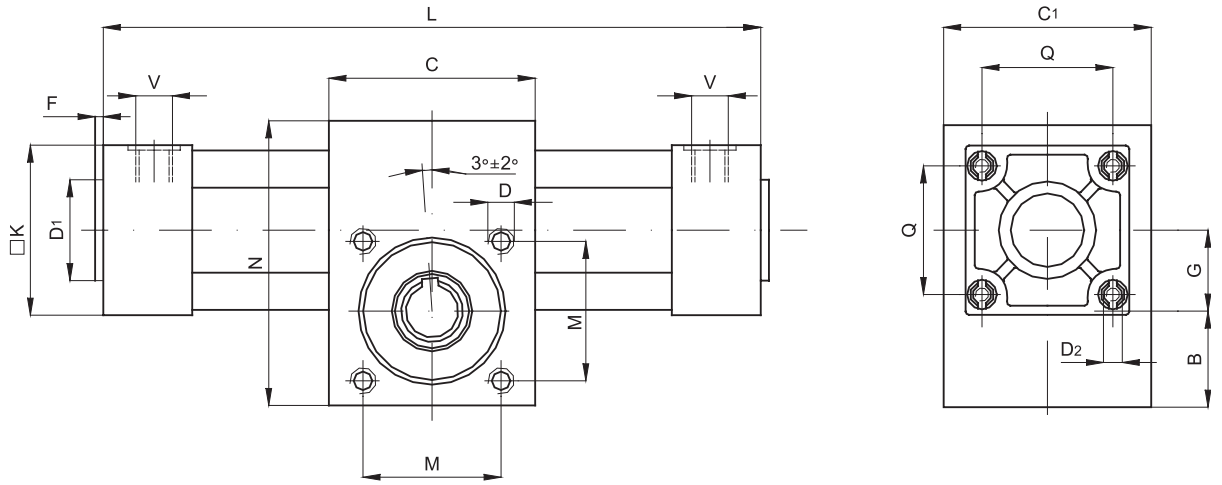

ø mm	L 96°	L 186°	L 366°	B	C	C1	D	D1 e9	D2	F	G	H	K	M	N	Q	V
32	221	268	352	24	50	50	M6x10	25	M6x5	3	22	45	45	35	70	33	1/8”
40	289	352	478	32,5	72	65	M8x14	32	M6x12	3	27,5	52	52	47	92,5	40	1/4”
50	289	352	478	32,5	72	65	M8x14	32	M8x13	3	27,5	65	65	47	92,5	49	1/4”
63	348,5	434,5	603,5	42,5	93	95	M10x16	45	M8x13	4	36	75	75	62	126	59	3/8”
80	348,5	434,5	603,5	42,5	93	95	M10x16	45	M10x14	5	36	95	95	62	126	75	3/8”
100	340,5	558,5	793,5	64	128	140	M14x24	55	M10x14	5	52,5	115	115	90	186,5	90	1/2”
125	340,5	558,5	793,5	64	128	140	M14x24	55	M12x14	5	52,5	140	140	90	186,5	110	1/2”

Type: **CR**

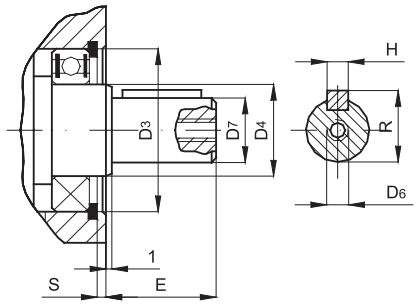

Type: **CRF**

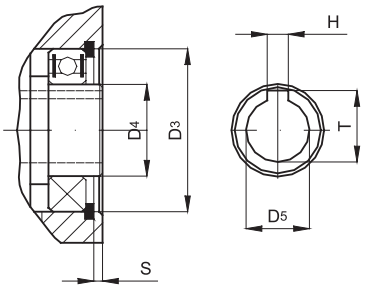

Type: **CRR-CRRF**

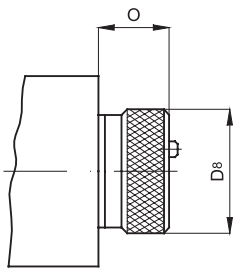

With angle adjustment

ø mm	D3 k7	D4 k6	D5 H7	D6	D7 h6	D8	E	H	O max	R +0 -0,1	S +0 -0,2	T +0,1 -0
32	35	17	10	M4x15	12	28	20	4	20	13,5	2,4	11,7
40	47	25	15	M5x15	16	35	30	5	23	18	3,2	17,2
50	47	25	15	M5x15	16	35	30	5	23	18	3,2	17,2
63	62	35	24	M8x20	24	48,5	40	8	27	27	3,9	27,2
80	62	35	24	M8x20	24	48,5	40	8	27	27	3,9	27,2
100	90	55	35	M12x20	35	60	50	10	39	38,5	5,4	38,7
125	90	55	35	M12x20	35	60	50	10	39	38,5	5,4	38,7

Hi-Rotor Cylinders

Sizes: 1, 3, 10, 20, 30, 50, 150, 300, 800 *Double acting*

Standard executions		
Version	Symbol	Type
Single vane Fixed rotation angle	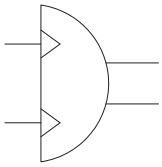	P
Double vane Fixed rotation angle		P1
Single vane Adjustable rotation angle	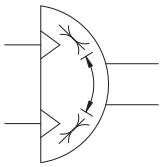	PR
Double vane Adjustable rotation angle		P1R

Options	Suffix
Magnetic with two sensors. For the complete pre-mounted kit see page 1.50.15.	M
Special versions on request	/ S

The options can be combined (when this is possible).

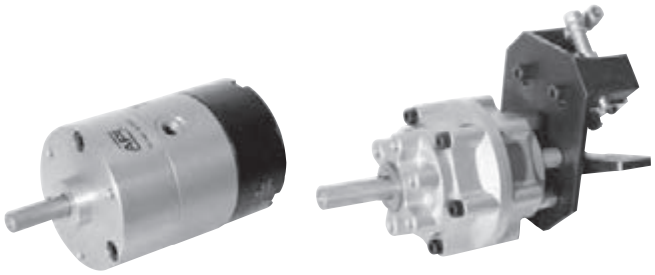

Series of Hi-rotor cylinders with fixed and adjustable rotation angles and reduced overall dimensions.
They are provided with elastic dampers to relieve the impacts of the vanes, which are available in the single and double (on some types) versions to get a higher torque.
For mounting accessories see from page 1.50.10.

How to order: 20/90° P

20	/	90°	P	
Size	/	Rotation angle*	Type	Option

* Were the model adjustable, you should indicate the maximum rotation angle.

Technical data	
Fluid	Compressed filtered air with or without lubrication. Lubrication, if be used, must be continous.
Pressure range	2 ÷ 10 bar - Models 1P-3P-3PR: 3 ÷ 7 bar - Models 10P-20P-10PR: 2 ÷ 7 bar
Temperature range	+5 °C ÷ + 60°C
Materials	Body: Die-cast aluminium Shaft: Steel Bearing: Sintered bronze Seals: Nitrile rubber (NBR)

Type	Standard rotation angles	Maximum rotation angle	Rotation angle tolerance	Moment (Nm) 3 bar	6 bar	9 bar	Possible rotation angles
1P	90°, 180°, 270°	270°	from 0° to +4°	0,076	0,156	-	90° and 180°
3P				0,16	0,38	-	
10P				0,56	1,2	-	
20P				0,95	2,1	3,26	
30P			from 0° to +3°	1,8	4,1	6,5	90°,180° and 270°
50P				2,59	5,9	9,5	
150P				8,5	18	27,3	
300P				16,5	34,5	51,8	
800P				59,1	123	186	
30P1				4,4	9,5	14,8	90°
50P1				5,79	12,8	20,1	
150P1				19	41,5	62	
300P1				39	83	124	
800P1				120	247	371	
3PR			from 0° to +3°	0,162	0,324	-	Adjustable from 30° ÷ 180°
10PR			from 0° to +3°	0,46	1,06	-	
20PR				0,8	1,95	3,1	
30PR			da 0° a +3°	1,8	4,1	6,5	Adjustable from 30° ÷ 270°
30P1R				4,4	9,5	14,8	Adjustable from 30° ÷ 90°

Seal kits not available for these cylinders.

Dimensions and oscillating points

Type: **1P**

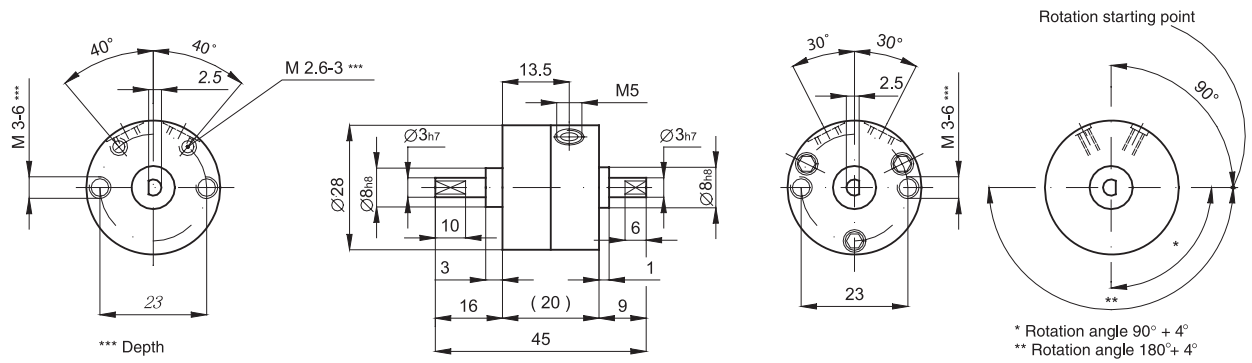

Type: **3P**

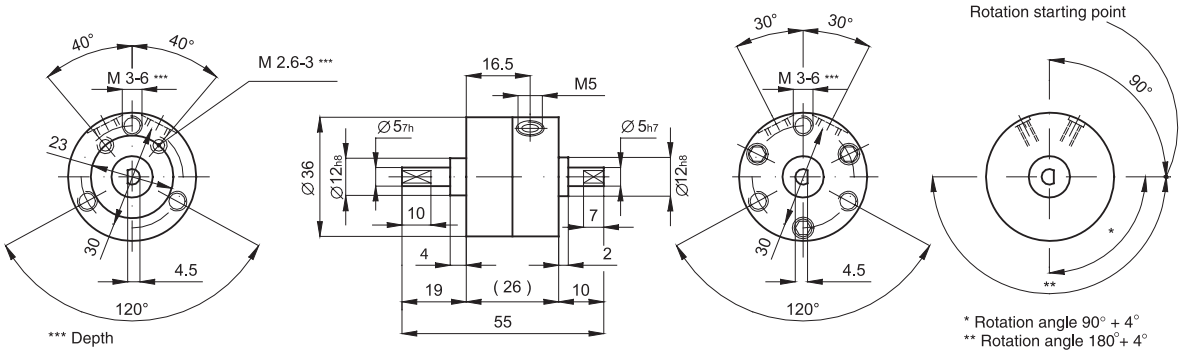

Type: **10P**

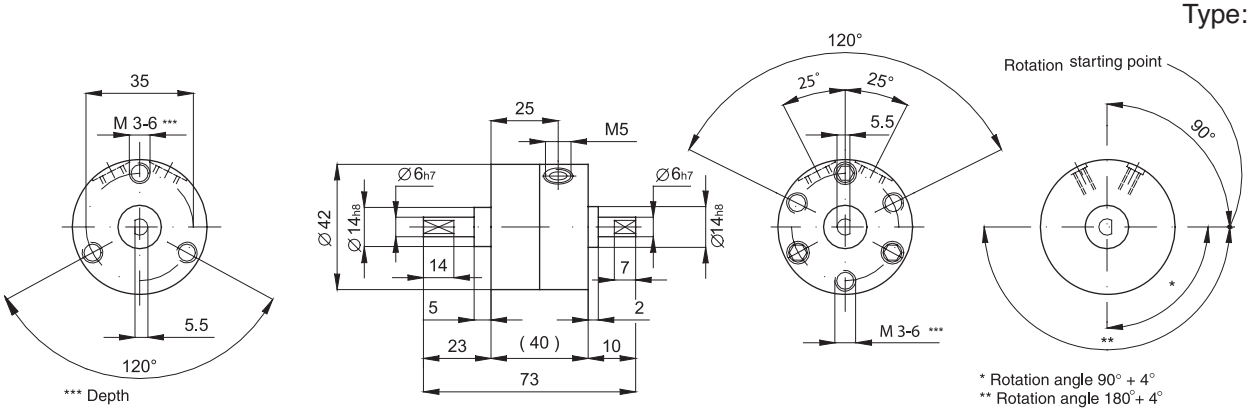

Type: **20P**

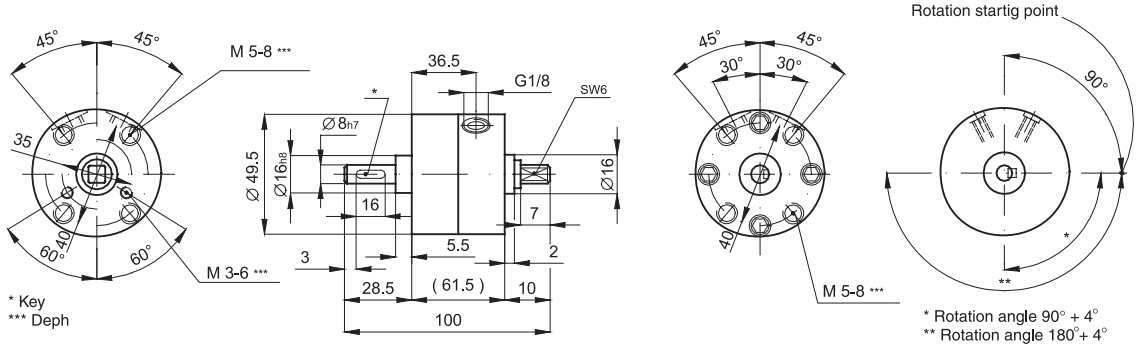

Dimensions and oscillating points

Type: **30P - 30P1**

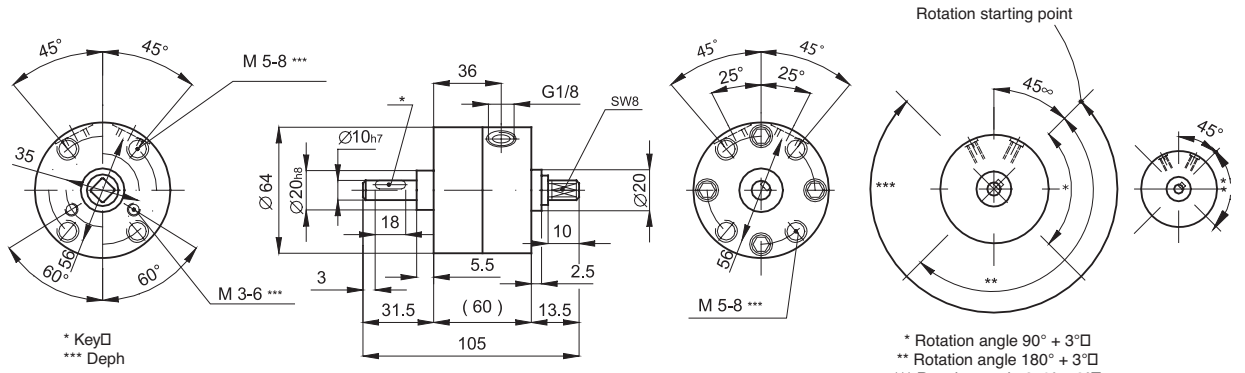

Type: **3PR**

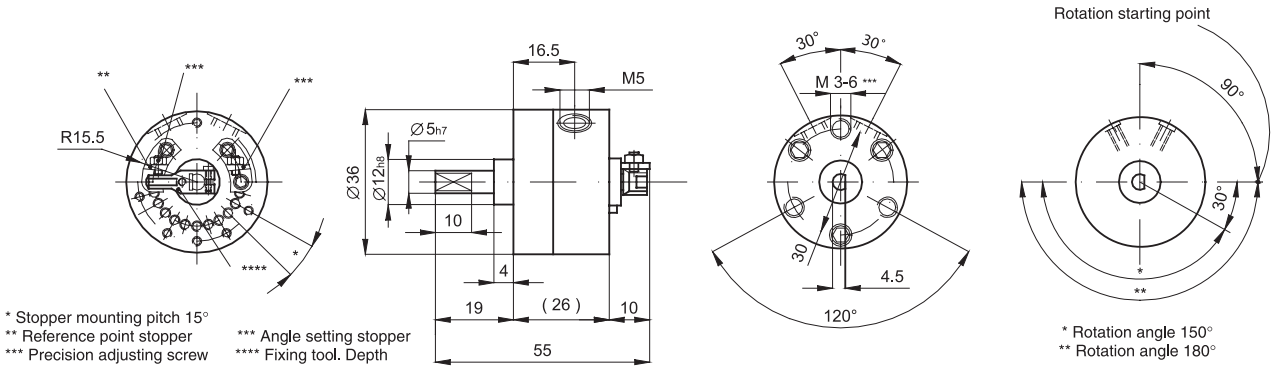

Type: **10PR**

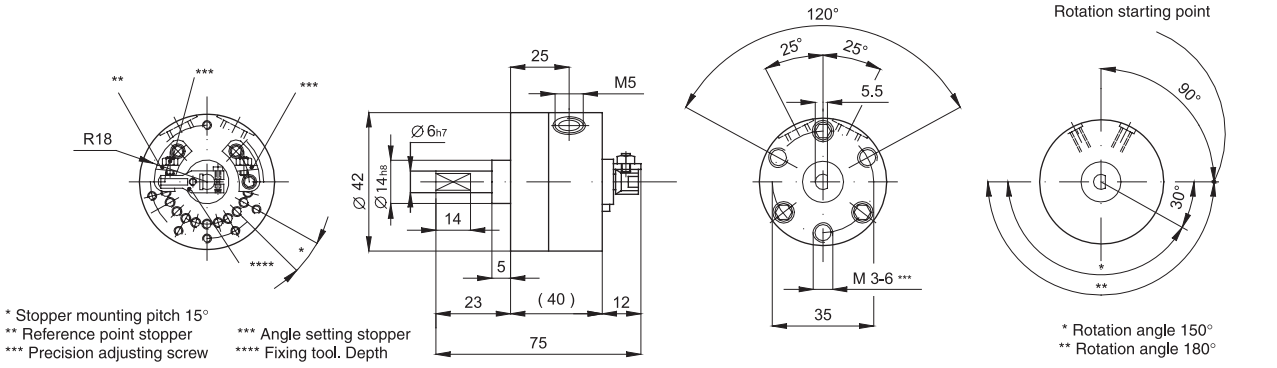

Type: **20PR**

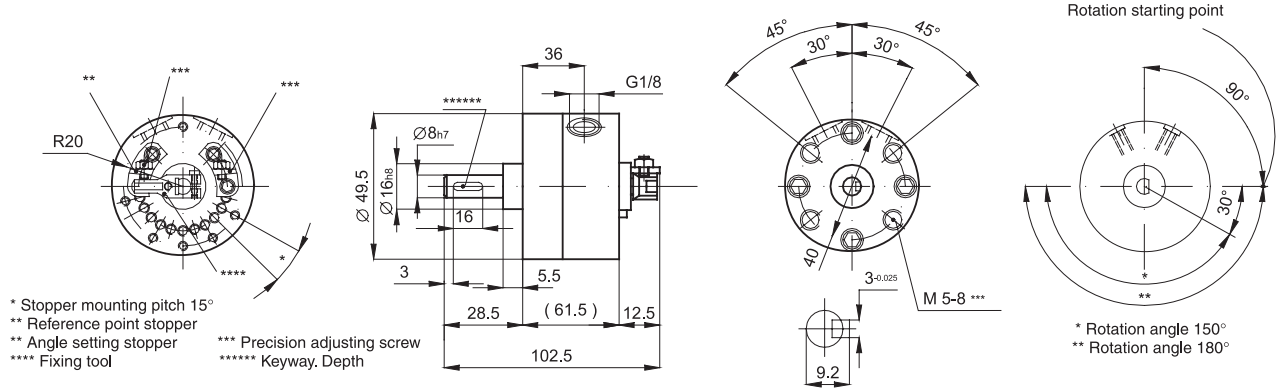

Type: **30PR - 30P1R**

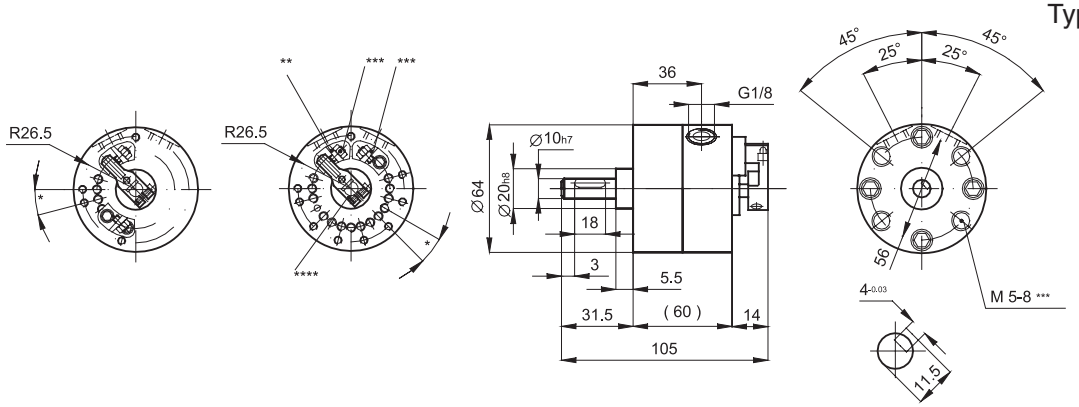

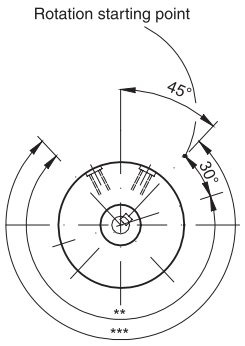

** Setting field of rotation angle 270°
*** Totation angle 270°

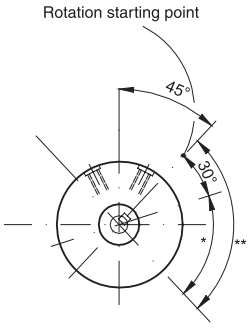

** Setting field of rotation angle 60°
*** Totation angle 270°

Type: **50, 150, 300, 800 / P, P1**

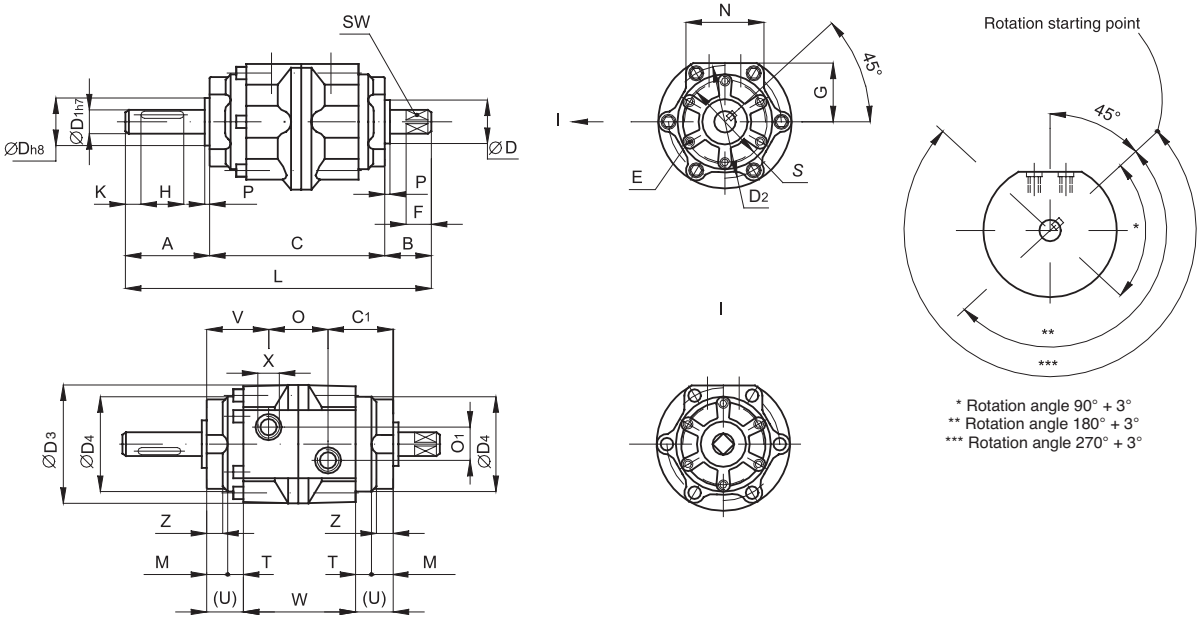

* Rotation angle 90° + 3°
** Rotation angle 180° + 3°
*** Rotation angle 270° + 3°

Size	A	B	C	C_1	D	D_1	D_2	D_3	D_4	E	F	G	H	K	L	M	N	O	O_1	P	S	T	U	V	W	X	Z	SW	Kg
50	39,5	19,5	86	29	25	12	68	79	58	M6x9	13	36	20	5	145	14	44	28	16	2,5	45	6	20	29	46	1/8”	11	10	0,82
150	53,5	23,5	103	34,5	30	17	97	110	85,5	M8x12	16	51	36	5	180	15,5	61	34	24	3	70	8	23,5	34,5	56	1/4”	10,5	13	2
300	65	30	125	41,5	45	25	125	141,5	110	M10x15	22	66	40	5	220	17,5	78	42	32	3,5	80	10	27,5	41,5	70	3/8”	13	19	4,3
800	69,5	44,5	171	53,5	70	40	173	196	152	M12x18	25	90	40	10	285	21	110	64	44	4,5	120	11,5	32,5	53,5	106	1/2”	14,5	32	12,7

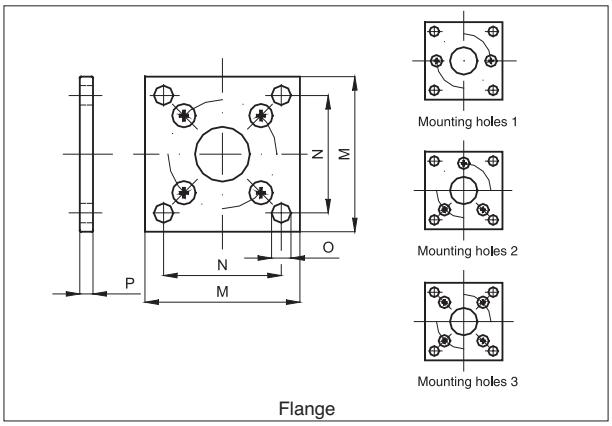

Flange

Type: **FP**

Code	Item	Size	M	N	O	P	Mounting holes	Rotation angles*	Kg
040901	FP001	1	30	24	3,4	2	1	180°	0,04
040902	FP003	3	27	30	3,4	2,5	2	120°	0,07
040903	FP010	10	42	34	3,5	3	2	120°	0,14
040904	FP020	20	50	41	5,5	3,5	3	90°	0,36
040905	FP030	30	64	52	5,5	3,5	3	90°	0,47

* The mounting can be rotated through the indicated angle.

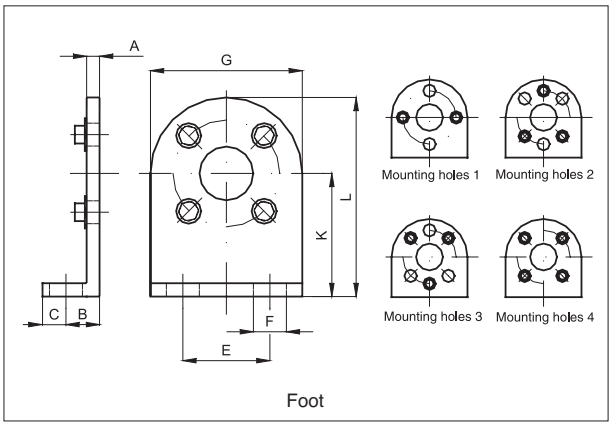

Foot

Type: **PP**

Code	Item	Size	A	B	C	E	F	G	K	L	Mount. Holes*	Rot. ang.*	Kg
040910	PP001	1	2	10	5	20	4,8	30	22	37	1	90°	0,04
040911	PP003	3	2,5	11	7	26	4,8	36	25	43	2	60°	0,05
040912	PP010	10	2,3	12	8	30	5,8	42	30	51	3	60°	0,09
040913	PP020	20	3,5	15	10	36	7	49	34	58,5	4	90°	0,20
040914	PP030	30	4,5	18	12	48	6,5	66	42	75	4	90°	0,20

* The mounting can be rotated trough the indicated angle.

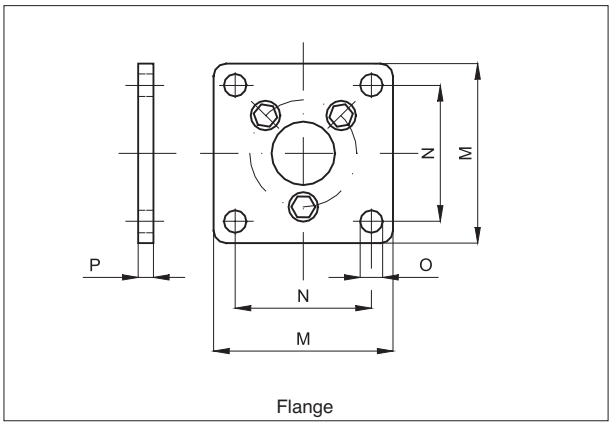

Flange

Type: **FP**

Code	Item	Size	M	N	O	P	Rotation angles*	Kg
040920	FP050	50	80	64	7	35	60°	0,20
040921	FP150	150	110	88	9	47,5	60°	0,51

* The mounting can be rotated through the indicated angle.

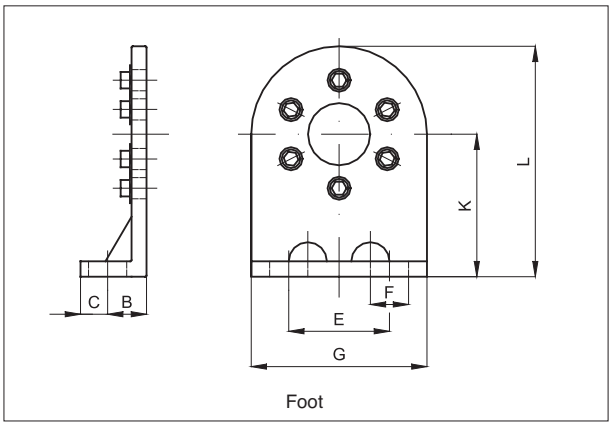

Foot

Type: **PP**

Code	Item	Size	A	B	C	E	F	G	K	L	Rotation angles*	Kg
040925	PP050	50	4,5	25	10	55	11	75	45	82,5	60°	0,26
040926	PP150	150	10	28	12	80	13	110	65	115	60°	1,14
040927	PP300	300	12	32	13	100	15	140	80	135	60°	1,24
040928	PP800	800	15	35	15	140	15	200	110	185	60°	4,45

* The mounting can be rotated trough the indicated angle.

Hydro-cushion kit

Type: **KA**

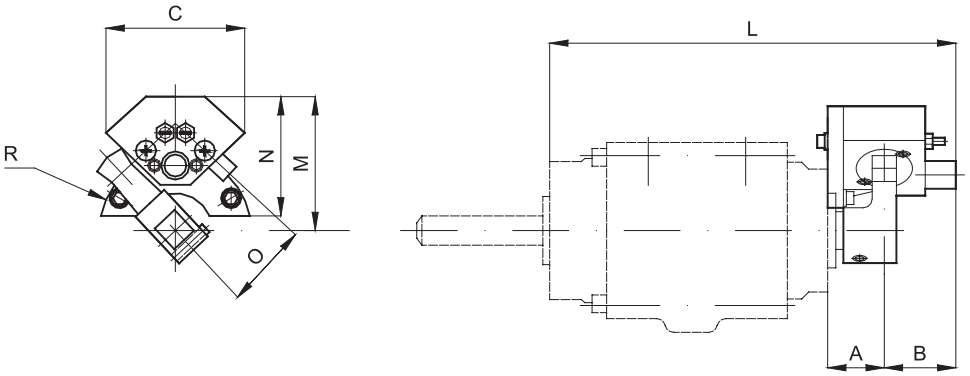

Code	Item	Size	A	B	C	L	M	N	O	R
040930	KA050	50	20,5	30	56	136,5	54	50	34	38
040931	KA150	150	22,5	34	80	159,5	71,5	62	46	51
040932	KA300	300	25,5	37	95	187,5	95	87	62	68

Bracket for hydraulic cushion

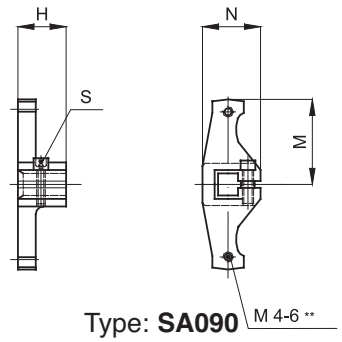

Type: **SA090**

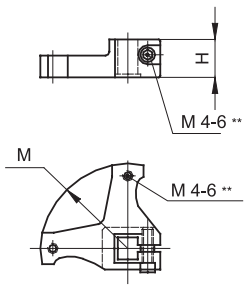

Type: **SA180**

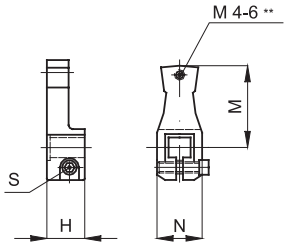

Type: **SA270**

** Depth

Code	Item	Code	Item	Code	Item	Size	H	M	N	S
040935	SA090050	040940	SA180050	040945	SA270050	50	18	38	23	4
040936	SA090150	040941	SA180150	040946	SA270150	150	20	51	28	5
040937	SA090300	040942	SA180300	040947	SA270300	300	23,5	68	40	6

Kit for the mounting of the sensors (with one sensor), option M.....

L	M
123	85
143	111
169	145

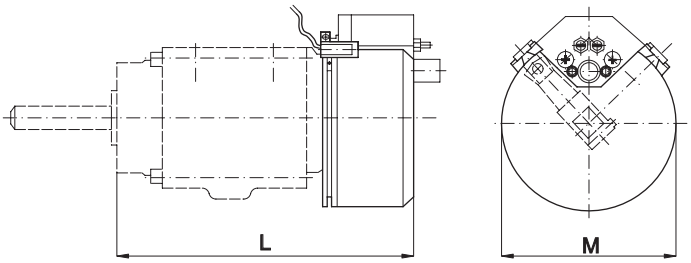

The kit is to be ordered together with the cylinder.

Options and technical data of the magnetic reed switches				
Option	Nominal voltage (V)	Rating current range (mA)	LED	Varistor
MA1	AC 100 / DC 24	5 ~ 45	•	
MD1	DC 24	25 ~ 65	•	
MA2L	AC 100 / 110	5 ~ 150	•	•
MA2H	AC 200 / 220	5 ~ 150	•	•
MD3	DC 5,6	≤ 50 (inductive load) ≤300 (resistive load)	•	
MR	AC / DC 5 ~ 100	≤ 50 (inductive load) ≤300 (resistive load)		

Standard executions		
Version	Code	Item
Bore 15 mm (x2)	073063	15ARC
Bore 18 mm (x2)	073064	18ARC
Bore 20 mm (x2)	073065	20ARC
Bore 25 mm (x2)	073066	25ARC



Options	Suffix
With hydraulic shock absorbers	D

Rotary actuator	Cushioning capability max (kgf.m)
15ARC	2
18ARC	4
20ARC	4
25ARC	20

Series of rotary actuators with double rack with rotation angles 90°-180° and adjustmenet angle from 0°÷90°.

They are standard magnetic provided with groves on the body allowing the direct mounting of the magnetic reed switches.
The mechanical stoppers are standard; the hydraulic shock absorbers can be supplied on request.

For the magnetic reed switches type ASC see from page 1.110.1

How to order: 20ARCD

20	ARC	D
Bore	Type	Option

Technical data				
Type	15ARC	18ARC	20ARC	25ARC
Fluid	Compressed filtered air with or without lubrication. Lubrication, if be used, must be continous.			
Pressure range	1,5 ÷ 7 bar			
Temperature range	0 °C ÷ + 50° C			
Rotation angle	90° and 180°			
Adjustment angle	0° ÷ 90°			
Rotation moments (Nm)	1,5	2,2	3,2	5,5
Ports	M5			1/8”
Weight (g)	530	990	1290	2100

Materials

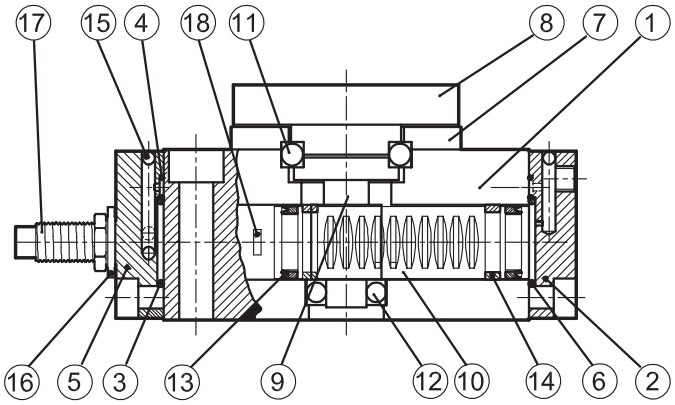

N.	Component	Material
1	Body	Anodized aluminium
2	Front head	Anodized aluminium
3	O-Ring	NBR
4	O-Ring	NBR
5	Rear head	Anodized aluminium
6	O-Ring	NBR
7	Bearings cover	Anodized aluminium
8	Rotating plate	Anodized aluminium
9	Piston rod	Hardned steel
10	Rack	Stainless steel
11	Spherical bearing	Steel
12	Spherical bearing	Steel
13	Piston seal	NBR
14	Washer	Plastic material
15	Ball	Steel alloy
16	Limit switch seal	NBR
17	Mechanical stopper	Steel alloy
18	Magnet	Metal

Direction and rotation angle

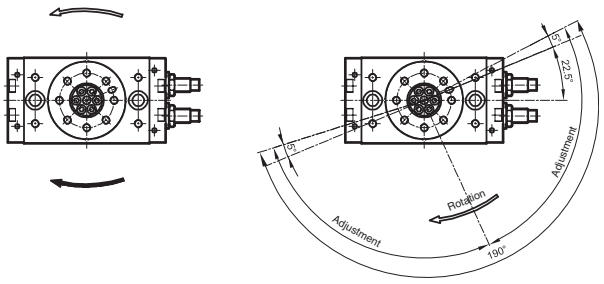

Rotation angles

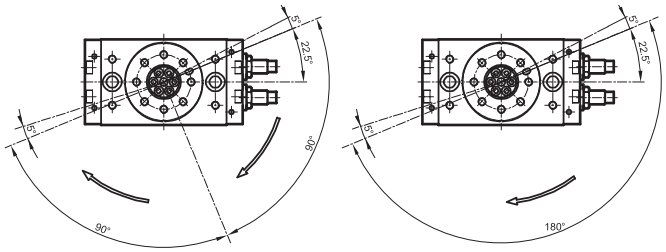

Possible loads

Kind of loads / Type	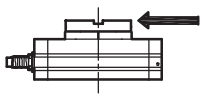	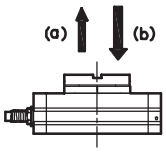		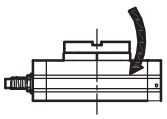
Load	Side (N)	Top (N) (a)	Top (N) (b)	Torque moment (N)
ARC15	70	68	70	2
ARC18	140	130	130	3,5
ARC20	185	188	358	4,8
ARC25	300	285	442	9

Type: **15ARC**

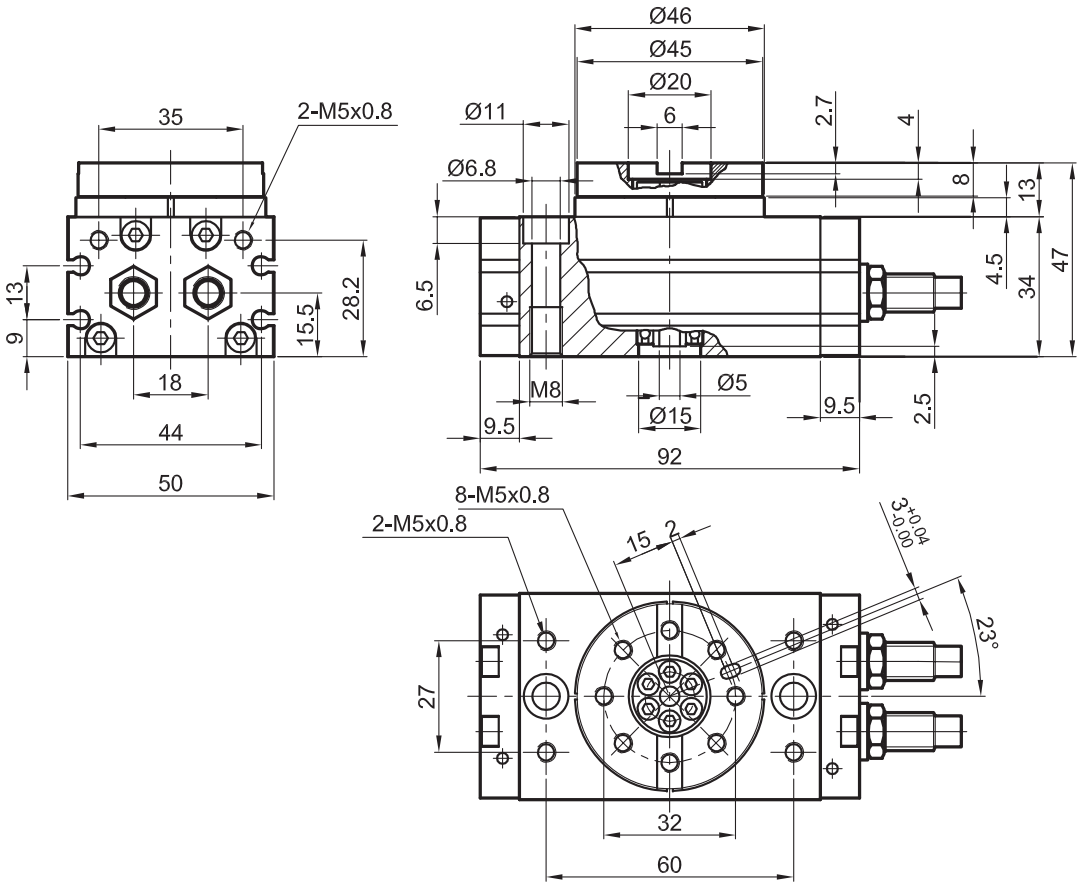

Type: **18ARC**

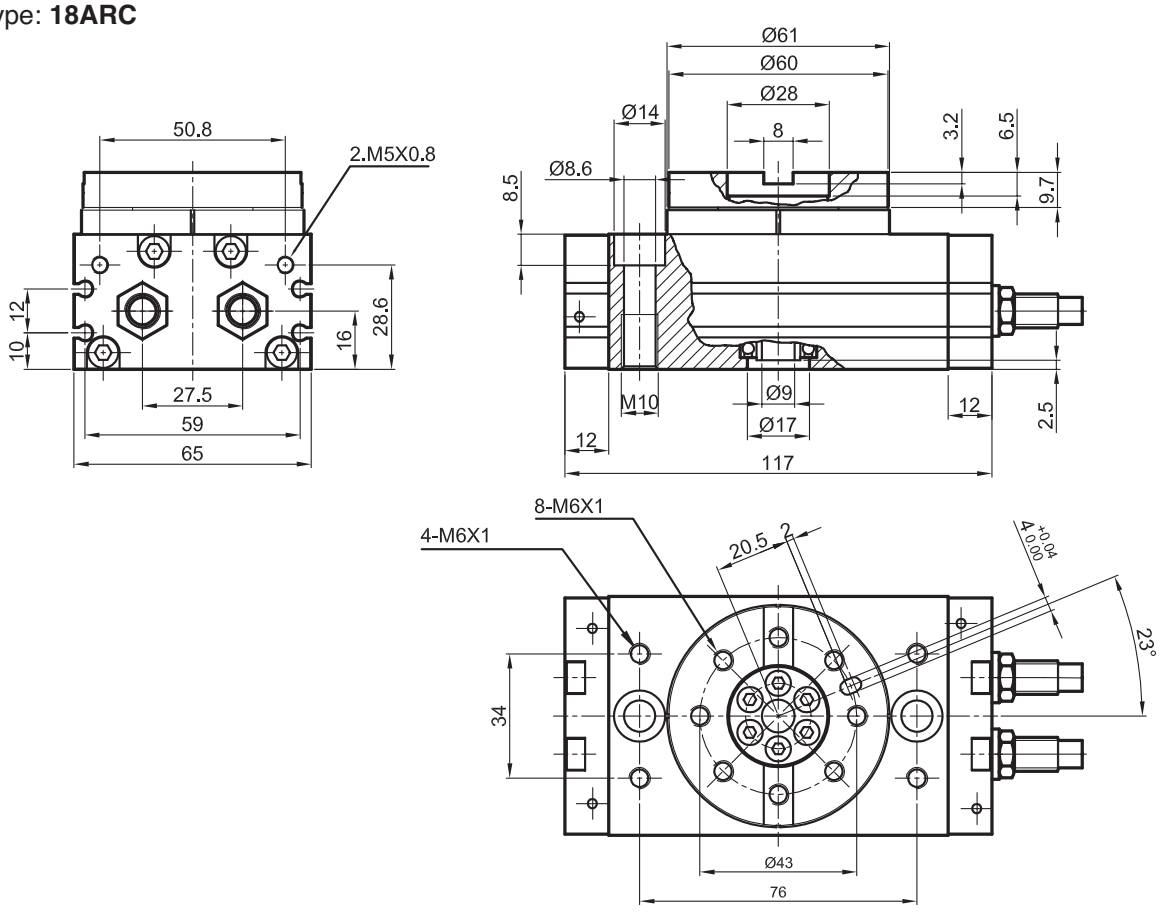

Type: **20ARC**

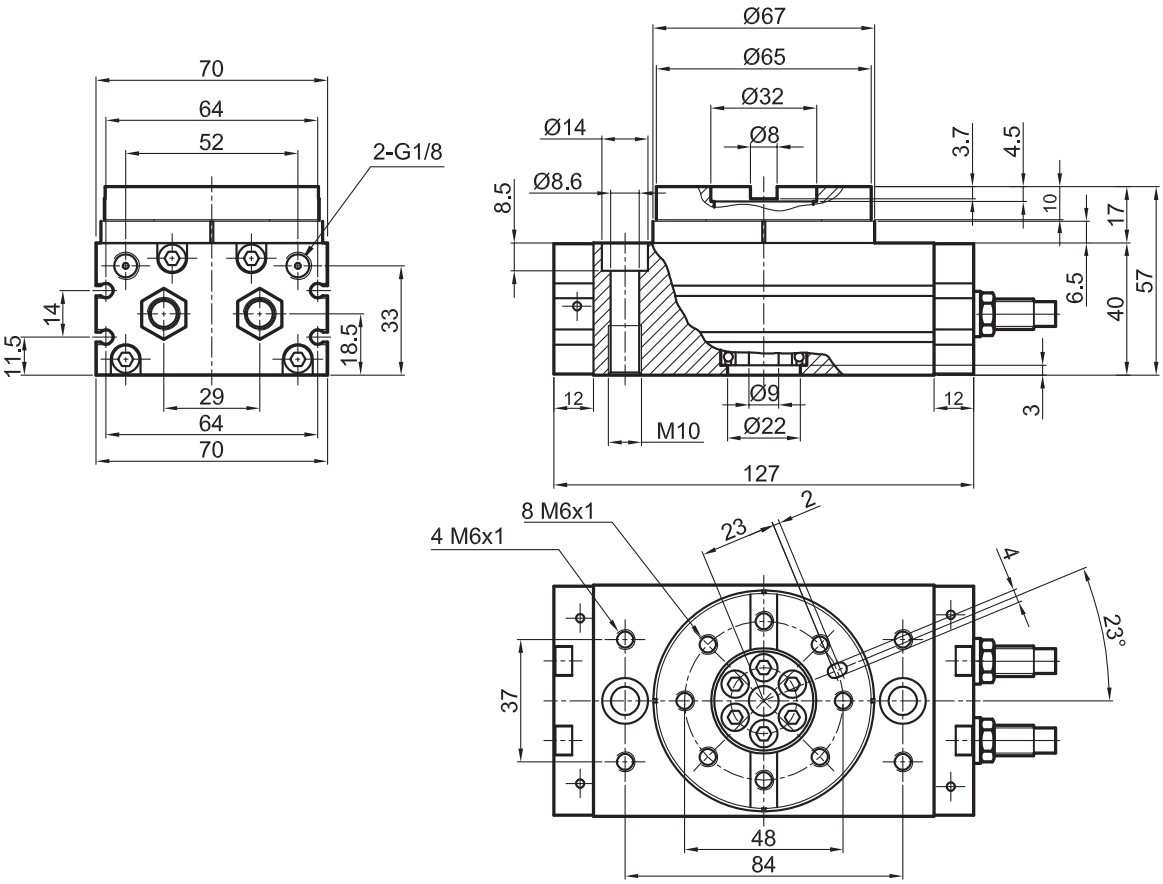

Type: **25ARC**

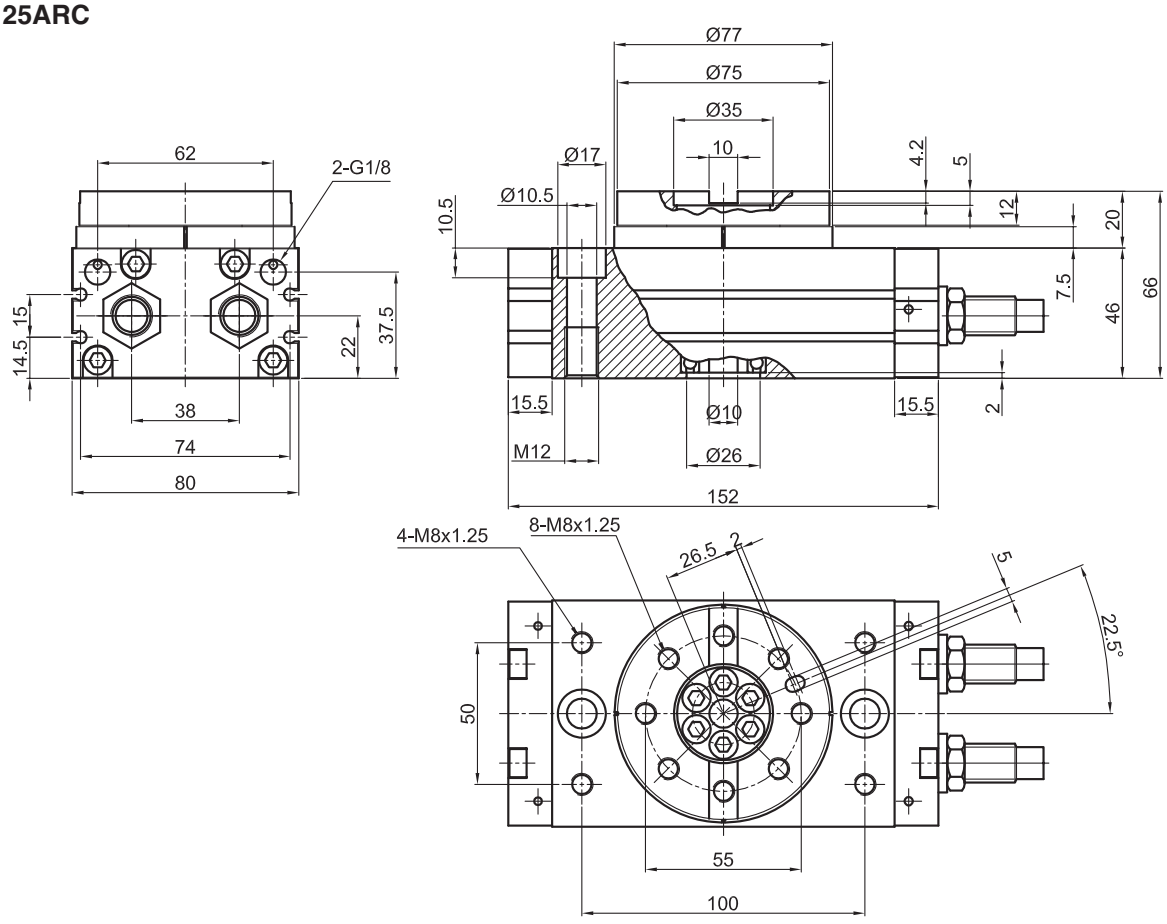

Esecuzioni standard		
Version	Code	Item
Bore 15 mm (x2), 90°	073071	15/90ARP
Bore 18 mm (x2), 90°	073072	18/90ARP
Bore 20 mm (x2), 90°	073073	20/90ARP
Bore 25 mm (x2), 90°	073074	25/90ARP
Bore 15 mm (x2), 180°	073079	15/180ARP
Bore 18 mm (x2), 180°	073080	18/180ARP
Bore 20 mm (x2), 180°	073081	20/180ARP
Bore 25 mm (x2), 180°	073082	25/180ARP

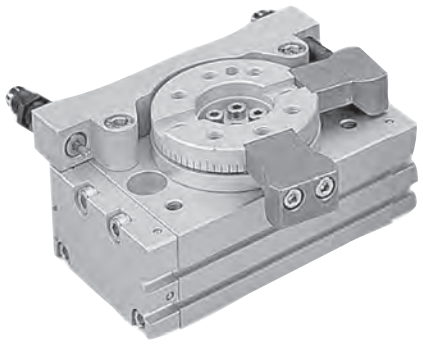

Option	Suffix
With hydraulic shock absorbers	D

Rotary actuator	Cushioning capability max (kgf.m)
15ARP	0,1
18ARP	0,15
20ARP	2,1
25ARP	2,1

Series of rotary actuators with piston and external mechanical stoppers.
Rotation angles 90°-180°.
They are standard magnetic provided with groves on the body allowing the direct mounting of the magnetic reed switches.
The mechanical stoppers are standard; the hydraulic shock absorbers can be supplied on request.

For the magnetic reed switches type ASC see from page 1.110.1

How to order: 20ARCD

19	/	90	ARP	D
Bore	/	Rotation	Type	Option

Technical data				
Type	15ARP	18ARP	20ARP	25ARP
Fluid	Compressed filtered air with or without lubrication. Lubrication, if be used, must be continous.			
Pressure range	1,5 ÷ 7 bar			
Temperature range	0 °C ÷ + 50 °C			
Rotation angle	90° and 180°			
Rotation moments (Nm)	2,5	4,1	5,5	9,8
Ports	M5x0,8		1/8”	
Weight (g)				
Materials	Body: Anodized aluminium Seals: NBR			

Rotation angles

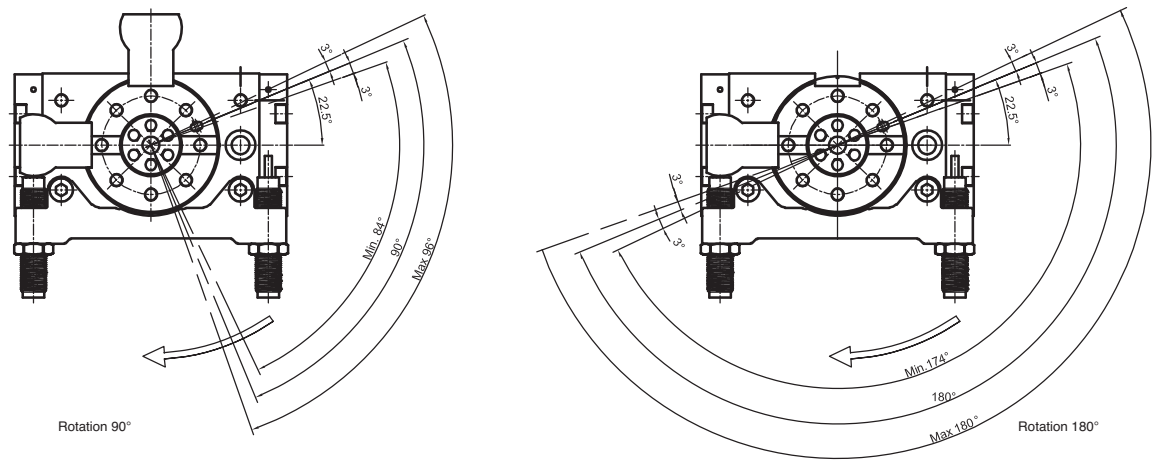

Dimensions

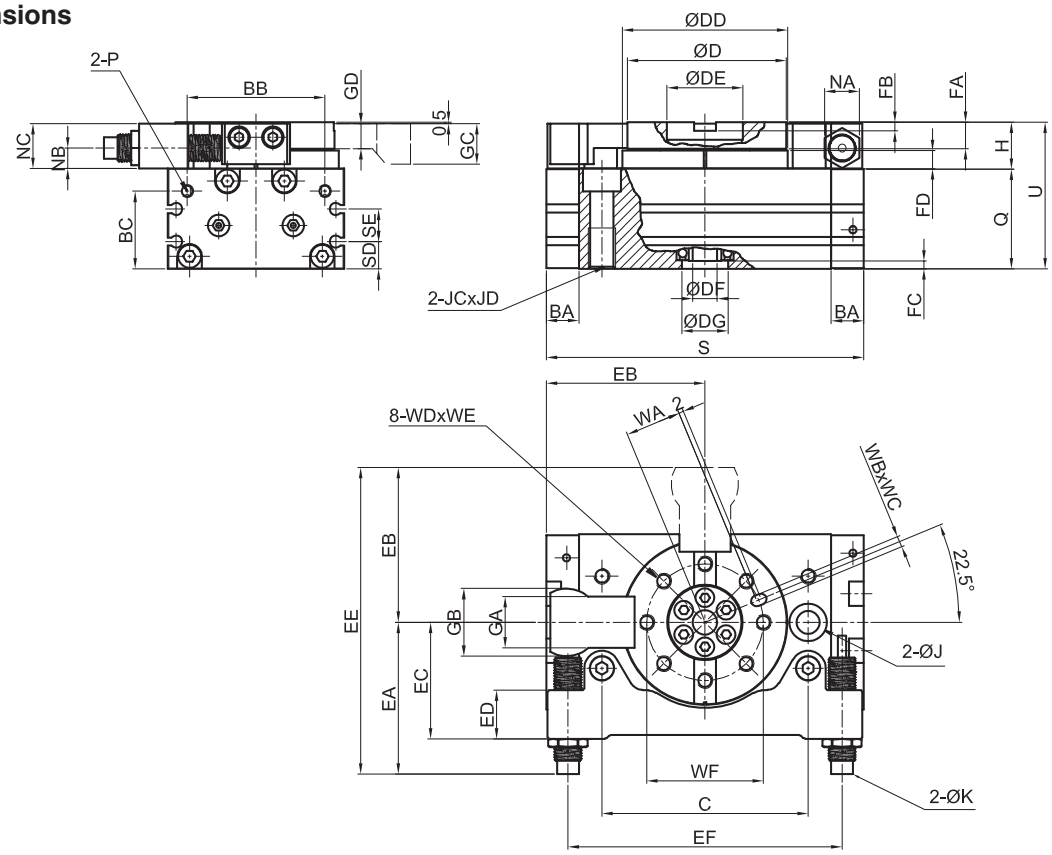

Type	A	BA	BB	BC	C	D	DD	DE	DF	DG	EA	EB	EC	ED	EE	EF	FA	FB	FC	FD	GA	GB	GC	GD	H
15ARP	50	9,5	35	28,2	60	45	46	20	5	15	51,6	44,5	34	14	96,1	80	8	4	2,5	4,5	15	20	12	7,5	13
18ARP	65	12	50,8	28,5	76	60	61	28	9	17	56	57	43	18	113	101	9,7	6,5	2,5	6,6	19	25	9	15	17
20ARP	70	12	52	33	84	65	67	32	9	22	59	62	46	18	121	110	10	4,5	3	6,5	20	28	16	9	17
25ARP	80	15,5	62	37,5	100	75	77	35	10	26	85	73	55	20	158	131	12	5	2	7,5	25	35	18	11,5	20

Type	J	JA	JB	JC	JD	K	NA	NB	NC	ND	P	Q	S	SD	SE	SF	U	WA	WB	WC	WD	WE	WF
15ARP	6,6	11	6,5	M8x1,25	12	M8x1	11	6	12,5	3	M5x0,8	34	92	9	13	44	47	15	3	3,5	M5x0,8	8	32
18ARP	8,6	14	8,5	M10x1,5	15	M10x1	12,7	7,5	16,5	3	M5x0,8	37	117	10	12	59	54	20,5	4	5	M6x1	10	43
20ARP	8,6	14	8,5	M10x1,5	15	M10x1	12,7	8,5	16,5	3	RC 1/8	40	127	11,5	14	64	57	23	4	4,5	M6x1	10	48
25ARP	10,5	17	10,5	M12x1,75	18	M14x1,5	19	8,5	19,5	6	RC 1/8	46	152	14,5	15	74	66	26,5	5	5,5	M8x1,25	10	55

GENERAL INDEX CILINDERS INDEX

Standard executions		
Version	Symbol	Type
With non-threaded rod	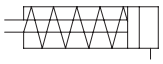	MCN
With threaded rod	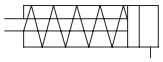	MCF

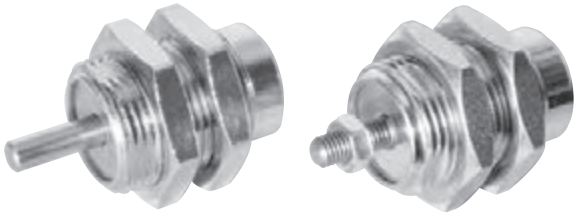

Series of cartridge microcylinders single acting with threaded body.
The threaded body allows a further adjustment of the end position of the stroke.

How to order: 10/15 MCN

10	/	15	MCN	
Bore	/	Stroke	Type	Option

Options	Suffix
Special versions on request	/ S

Seal kits not available for these cylinders.

Technical data		
Fluid	Compressed filtered air with or without lubrication. Lubrication, if be used, must be continous.	
Pressure range	2 ÷ 7 bar	
Temperature range	-20 °C ÷ + 80°C	
Materials	Body:	Nickel plated brass
	Rod:	Stainless steel AISI 303
	Seals:	Polyurethane
	Spring:	Stainless steel AISI 302

Bore (mm)	Possible strokes (mm)	Thrust force at 6 bar (N)	Traction force (N)			Maximum side admissible load (N)
			5	10	15	
6	5, 10, 15	14	1,4	2	1,5	0,1
10		42	3,9	3,4	2,9	0,15
16		109	9,9	8,7	7,4	0,20

Type: **MCF**

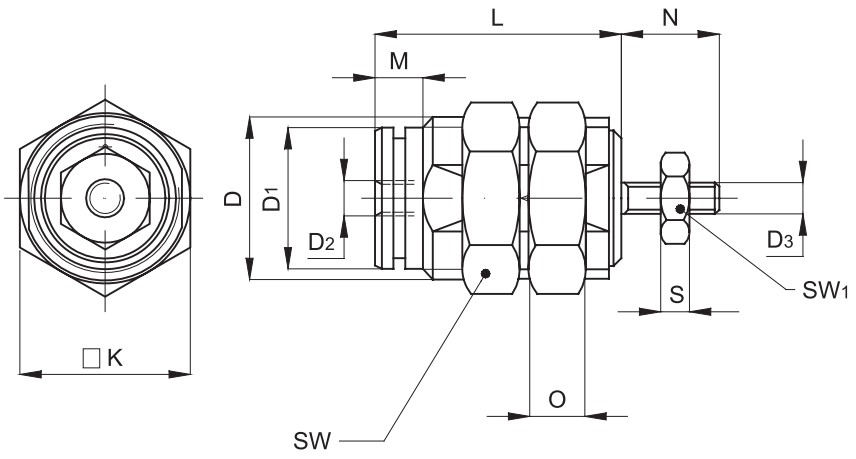

Type: **MCN**

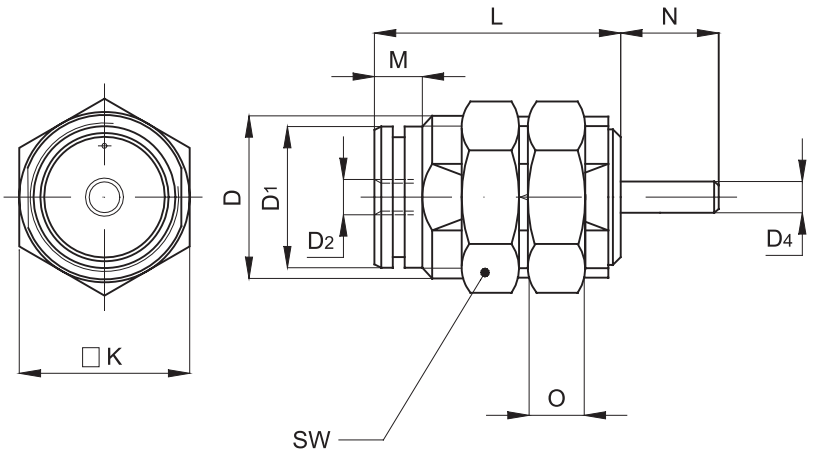

ø mm	D	D_1	D_2	D_3	D_4	K	M	L (with the stroke included) 5	L (with the stroke included) 10	L (with the stroke included) 15	N	O	SW	S	SW_1
6	M10x1	8,5	M5	M3	3	9	5	19,5	26,5	33,5	8	3	14	2,4	5,5
10	M15x1,5	12	M5	M4	4	19	7	23	29,5	36,5	10,5	4	19	2	7
16	M22x1,5	19	M5	M5	5	20	6	27	32	37	13	5	27	4	8

Standard executions		
Version	Symbol	Type
U-shaped (light) with sintered bronze bushings		UGLB
H-shaped (heavy) with sintered bronze bushings		UGPB
H-shaped (heavy) with spherical bearings		UGPS

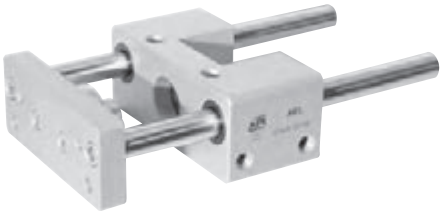



On request, they can be supplied according Directive 94/9/EC - **ATEX**
CE Ex II 2 GDc T5

Series of linear slide units for cylinders ISO 6432 with four possible fixing surfaces.
They must be used with heavy loads to guarantee a better linearity of movement and a higher precision.
They can sometimes be used as anti-rotating devices too.
The versions with spherical bearings slide better but can support lighter loads than the versions with bronze bushings.
The U-shaped versions, can support lighter loads than the H-shaped ones.

For loads see pages 1.70.5 - 1.70.10.

How to order: UGPB20/100K

Option	Suffix
Rods in stainless steel AISI 304	K
Special versions on request	/ S

The options can be combined (when this is possible)

UGPB	20	/	100	K
Type	Cylinder bore	/	Cylinder stroke	Option

Technical data		
Temperature range:	-20 °C ÷ + 70°C	
Materials	Body:	Anodised aluminium
	Plate:	Anodised aluminium
	Seals:	Polyurethane - Bronze bushing: Sintered bronze
	Bushings:	UGLB - UGPB: Sintered bronze UGPS: Spherical bearings
	Rods:	UGLB - UGPB: Chrome plated steel C45 UGPS: Hardened and chrome plated steel CF51

Cylinder bore (mm)	Standard strokes of cylinders D.A. (mm)	Maximum stroke of cylinders D.A. (mm)
12	10, 25, 50, 80 100, 125, 160 200, 250, 320, 400, 500	1000
16		
20		
25		

Seal kits not available.

Slide Units for Cylinders ISO 6432

Bores from 12 to 25 mm

Type: **UGLB 12/16**

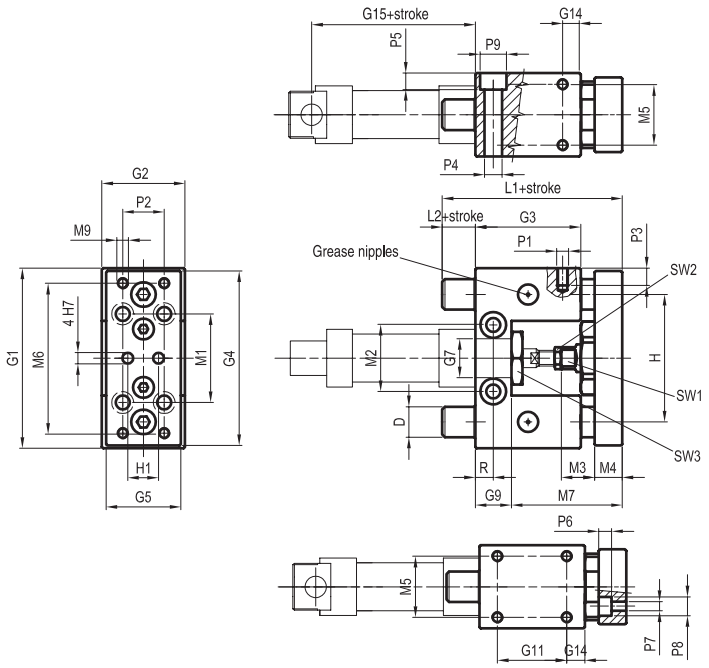

Ø mm	D	G1	G2	G3	G4	G5	G7	G9	G11	G14	G15	H	H1	L1	L2	M1	M2	M3
12	10	65	30	38	63	27	16	13	25	6,5	53	46	32	74	10	32	24	12
16	10	65	30	38	63	27	16	13	25	6,5	60	46	32	74	10	32	24	12

Ø mm	M4	M5	M6	M7	M9	P1	P2	P3	P4	P5	P6	P7	P8	P9	R	SW1	SW2	SW3
12	10	22	54	51	M4	M4	15	8	5,2	5,5	4,5	4,5	7	8,5	6,5	8	10	19
16	12	22	54	51	M4	M4	15	8	5,2	5,5	4,5	4,5	7	8,5	6,5	8	10	19

Type:: **UGLB 20/25**

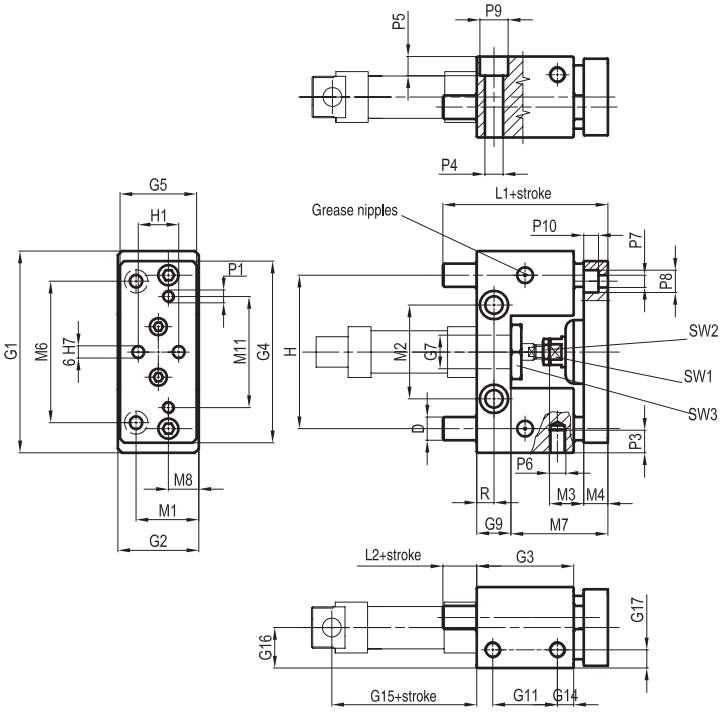

Ø mm	D	G1	G2	G3	G4	G5	Ø G7	G9	G11	G14	G15	G16	G17	H	H1	R	M1	M2	M3
20	12	100	40	48	90	38	22	17	32	8	71	24	10	76	20	8,5	30	46,5	19
25	12	100	40	48	90	38	22	17	32	8	76	24	10	76	20	8,5	30	46,5	19

Ø mm	M4	M6	M7	M8	M11	L1	L2	Ø P1	P3	Ø P4	P5	Ø P6	Ø P7	Ø P8	Ø P9	P10	SW1	SW2	SW3
20	12	70	48	15	55	75	12	M6	15	9	9	M8	6,5	11	14	7	13	13	27
25	12	70	54	15	55	83	12	M6	15	9	9	M8	6,5	11	14	7	13	17	27

Type:: **UGPB-UGPS**

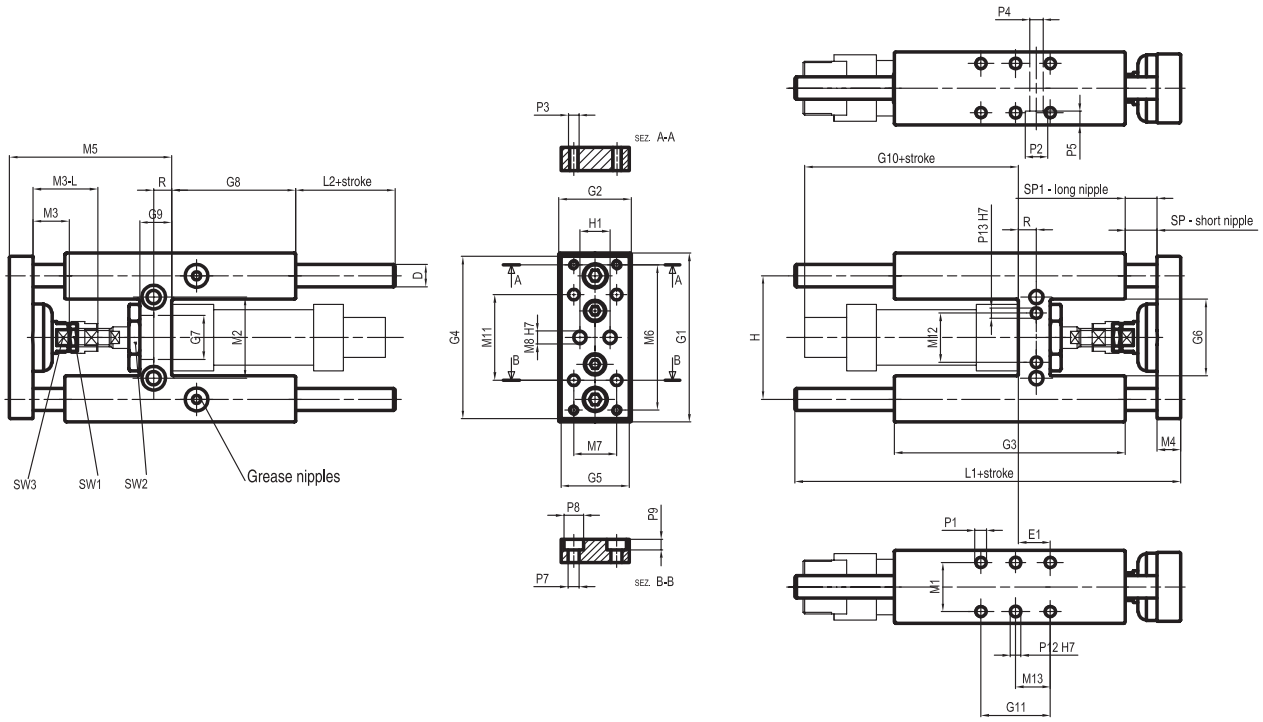

Ø mm	D	E_1	G_1	G_2	G_3	G_4	G_5	G_6	G_7	G_8	G_9	G_{10}	G_{11}	H	H_1
12	10	11	65	30	75	63	27	27	16	37	13	66	32,5	46	15
16	10	11	65	30	75	63	27	27	16	37	13	71	32,5	46	15
20	12	15	79	34	108	76	32	36	22	58	15	87	32,5	58	20
25	12	15	79	34	108	76	32	36	22	58	15	90	32,5	58	20

Ø mm	L_1	L_2	M_1	M_2	M_3	M_4	M_5	M_6	M_7	M_8	M_{11}	M_{12}	M_{13}	M_{3L}	P_1
12	125	37	22	24	12	10	51	54	15	4	32	/	16,25	/	M4
16	125	37	22	24	12	10	51	54	15	4	32	/	16,25	/	M4
20	160	37	23	38	18	12	65	68	20	6	40	23	16,25	40	M6
25	160	37	23	38	18	12	65	68	20	6	40	23	16,25	40	M6

Ø mm	P_2	P_3	P_4	P_5	P_7	P_8	P_9	P_{13}	P_2	R	SP	SP_1	SW_1	SW_2	SW_3
12	8,5	M4	5,5	5,5	4,5	7	4,5	/	/	6,5	3	3	10	19	8
16	8,5	M4	5,5	5,5	4,5	7	4,5	/	/	6,5	3	3	10	19	8
20	10,5	M5	6,5	7	5,5	9	6	5	5	8,5	3	22	13	27	13
25	10,5	M5	6,5	7	5,5	9	6	5	5	8,5	3	22	17	27	13

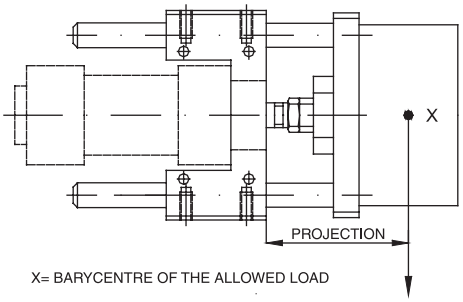

X= BARYCENTRE OF THE ALLOWED LOAD

Graph of the maximum allowed load according to the projection (vertical loading plane)

Control type "U" with spherical bearings
type **UGLB**

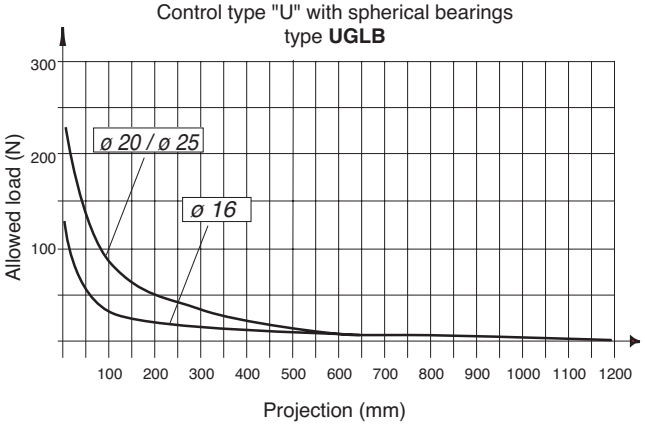

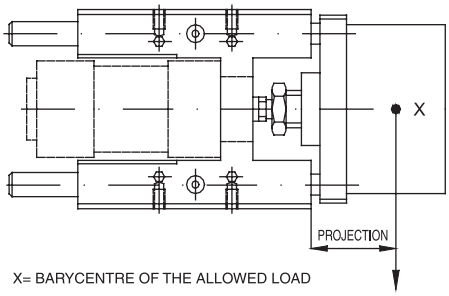

X= BARYCENTRE OF THE ALLOWED LOAD

Graph of the maximum allowed load according to the projection (vertical loading plane)

Control type "H" with bushings
type **UGPB**

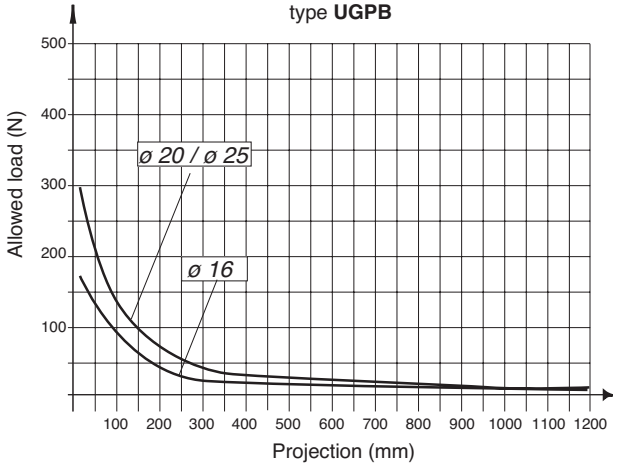

Control type "H" with spherical bearings
type **UGPS**

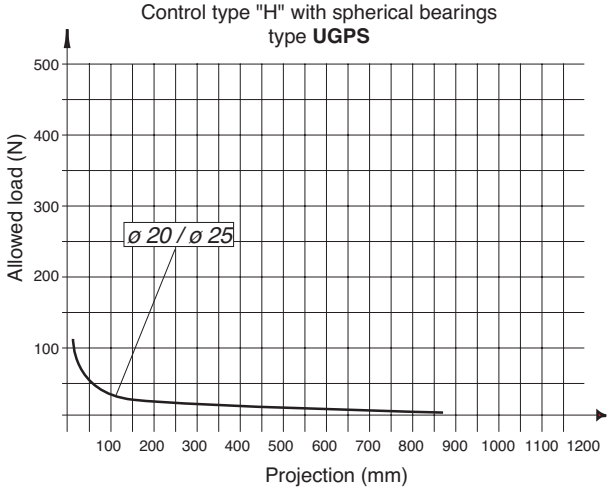

Standard executions		
Version	Symbol	Type
U-shaped (light) with sintered bronze bushings		UGLB
H-shaped (heavy) with sintered bronze bushings		UGPB
H-shaped (heavy) with spherical bearings		UGPS

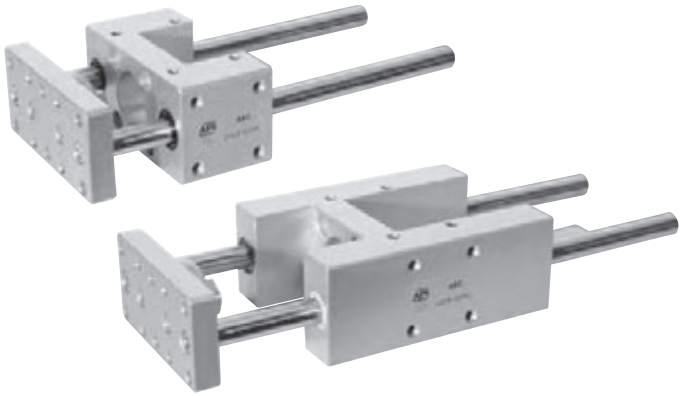

On request, they can be supplied according Directive 94/9/EC - **ATEX**
CE Ex **II 2 GDc T5**

Series of linear slide units for cylinders DIN ISO 6431 and VDMA 24 562 with 4 possible fixing surfaces.
They must be used with heavy loads to guarantee a better linearity of movement and a higher precision.
They can sometimes be used as anti-rotating devices too.
The versions with spherical bearings slide better but can support lighter loads than the version with bronze bushings.
The U-shaped versions, can support lighter loads than the H-shaped ones.

For loads see pages 1.70.25 - 1.70.30.
For mounting accessories see from page 1.70.40.

Options	Suffix
Rods in stainless steel AISI 316	K
Special versions on request	/ S

The options can be combined (when this is possible)

How to order: UGPS40/200K

UGPS	40	/	200	K
Type	Cylinder bore	/	Cylinder stroke	Option

Technical data		
Temperature range	-20 °C ÷ + 70°C	
Materials	Body:	Anodised aluminium
	Plate:	Anodised aluminium
	Seals:	Polyurethane
	Bushings:	UGLB-UGPB: Sintered bronze UGPS: Spherical bearings
	Rods:	UGLB-UGPB: Chrome plated steel C45 UGPS: Hardened and chrome plated steel CF51

Cylinder bore (mm)	Standard strokes of cylinders D. A. (mm)	Maximum stroke of cylinders D. A. (mm)
32	25, 50, 80, 100, 125, 160, 200, 250, 300, 320 400, 500	2500
40		
50		
63		
80		
100		

Seal kits not available.

Type: **UGLB**

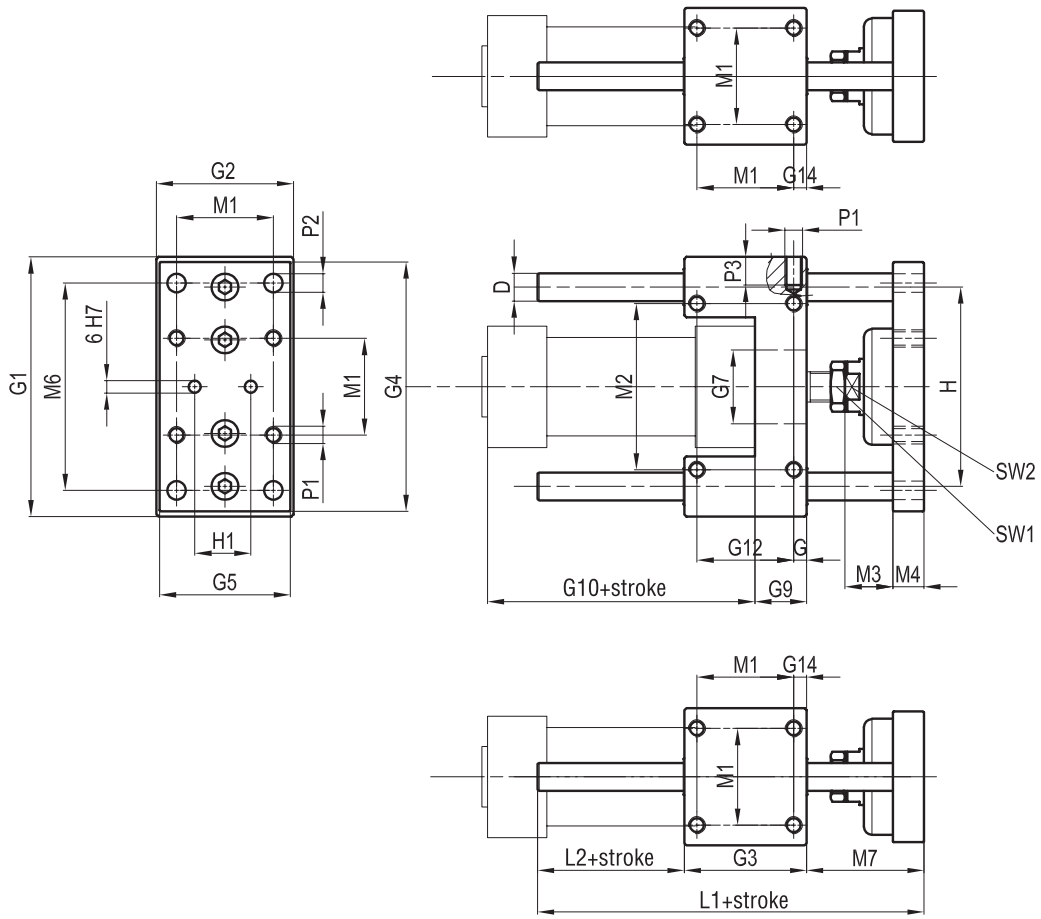

Ø mm	D	G	G_1	G_2	G_3	G_4	G_5	Ø G_7	G_9	G_{10}	G_{12}	G_{14}	H	H_1
32	12	7,8	100	48	48	95	45	30	17	94	32,5	7,8	74	31
40	12	10	106	56	58	101	53	35	21	105	38	10	80	36
50	16	6,3	125	66	59	120	63	40	25	106	46,5	6,3	96	45
63	16	9,8	132	76	76	127	73	45	25	121	56,5	9,8	104	45
80	20	20	165	98	90	160	95	45	34	128	50	9	130	56
100	20	20	185	118	110	180	115	55	39	138	70	10,5	150	56

Ø mm	M_1	M_2	M_3	M_4	M_6	M_7	L_1	L_2	ø P_1	P_2	P_3	SW_1	SW_2
32	32,5	58	23	11	78	46	108	14	M6	6,5	12	15	17
40	38	64	23	15	84	52	120	10	M6	6,5	12	15	17
50	46,5	80	24	15	100	65	130	6	M8	8,5	15	22	24
63	56,5	95	24	15	105	65	145	4	M8	8,5	15	22	24
80	72	130	30	16	130	71	170	9	M10	11	18	27	27
100	89	150	30	18	150	71	190	9	M10	11	18	27	27

Type: **UGPB-UGPS**

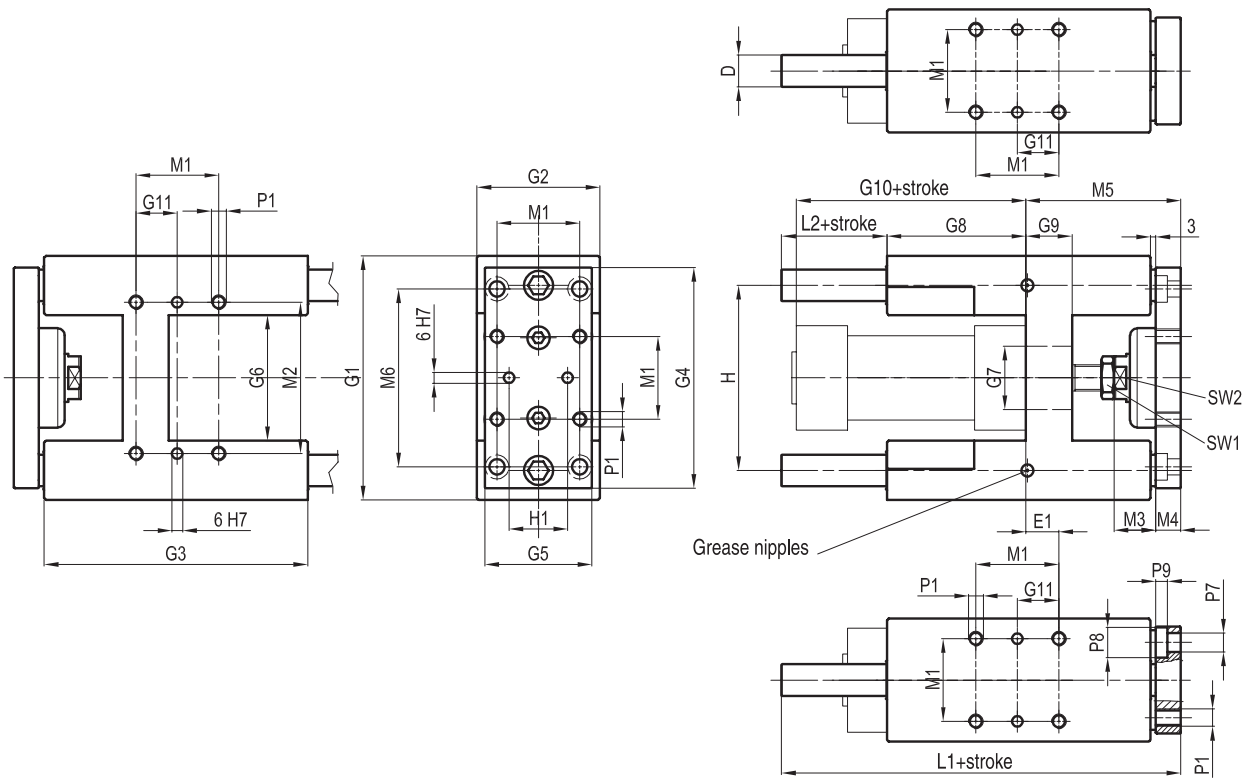

Ø mm	D	E_1	G_1	G_2	G_3	G_4	G_5	G_6	Ø G_7	G_8	G_9	G_{10}	G_{11}	H	H_1
32	12	4,3	97	49	125	90	45	50,2	30	76	17	94	16,25	74	31
40	16	11	115	58	139	110	54	58,2	35	81	21	105	19	87	36
50	20	18,8	137	69	148	124	60	70,2	40	78	26	106	23,25	104	45
63	20	15,3	152	85	178	145	79	85,2	45	107	26	121	28,25	119	46
80	25	21	189	105	215	180	99	106	45	128	34	128	36	148	56
100	25	24,5	213	129	220	200	120	131	55	128	39	138	44,5	172	56

Ø mm	M_1	M_2	M_3	M_4	M_5	M_6	L_1	L_2	Ø P_1	Ø P_7	Ø P_8	P_9	SW_1	SW_2
32	32,5	61	23	11	63	78	177	38	M6	6,5	10,5	6,5	15	17
40	38	69	23	15	76	84	192	35	M6	6,5	10,5	6,5	15	17
50	46,5	85	24	15	88	100	205	39	M8	8,5	13,5	9	22	24
63	56,5	100	24	15	89	105	237	41	M8	8,5	13,5	9	22	24
80	72	130	30	20	110	130	280	42	M10	11	18	11	27	27
100	89	150	30	20	115	150	280	37	M10	11	18	11	27	27

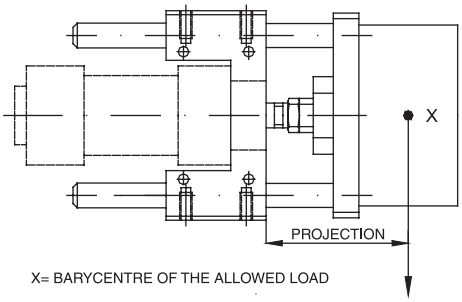

X= BARYCENTRE OF THE ALLOWED LOAD

Graph of the maximum allowed load according to the projection (vertical loading plane)

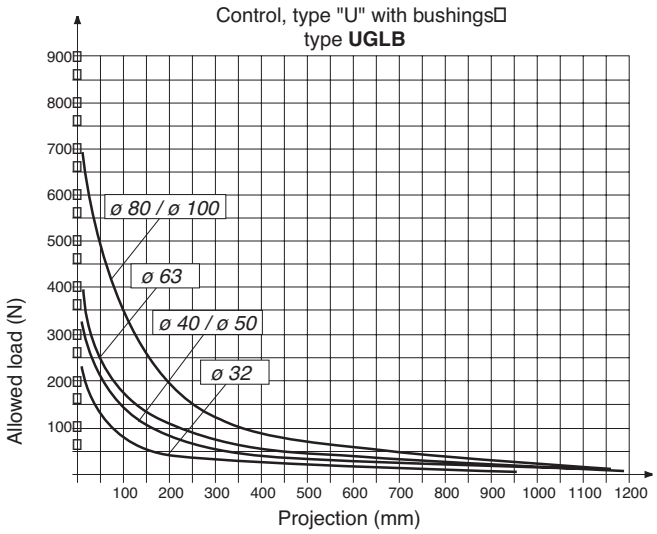

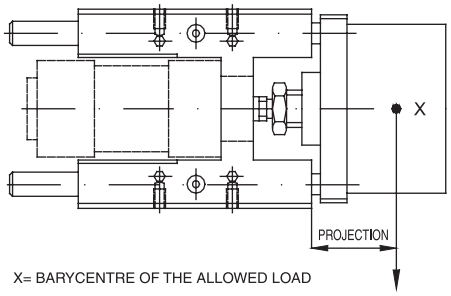

X= BARYCENTRE OF THE ALLOWED LOAD

Control type "H" with bushings
type **UGPB**

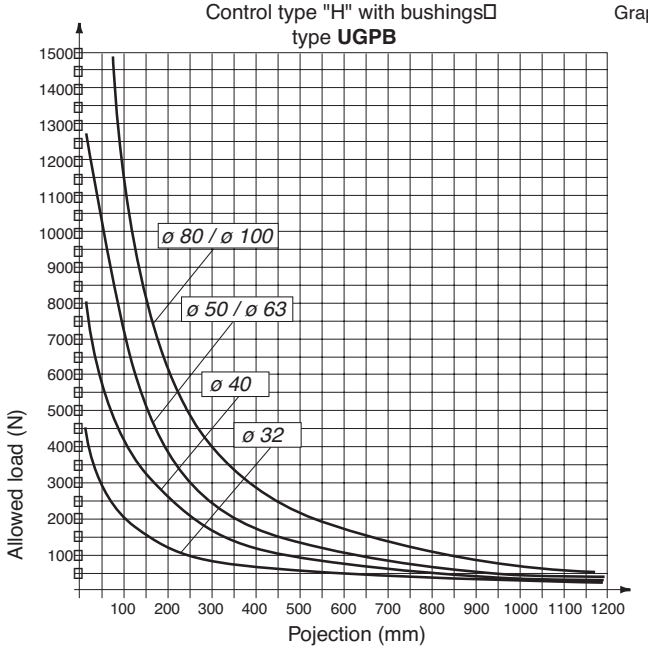

Graph of the maximum allowed load according to the projection (vertical loading plane)

Control type "H" with spherical bearings
type **UGPS**

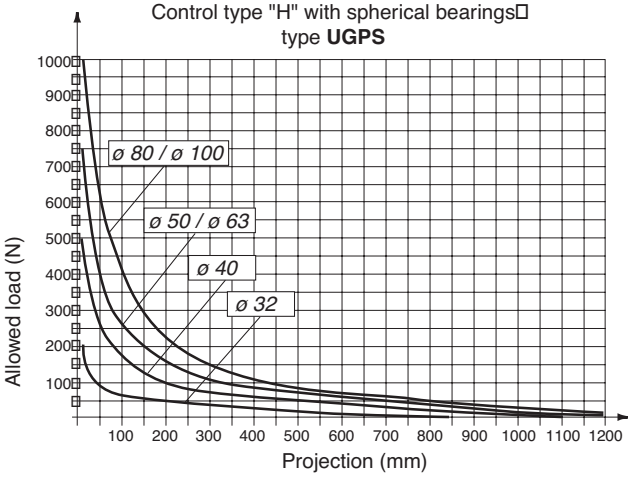

Connecting bracket for rods

Type: **SCSG**

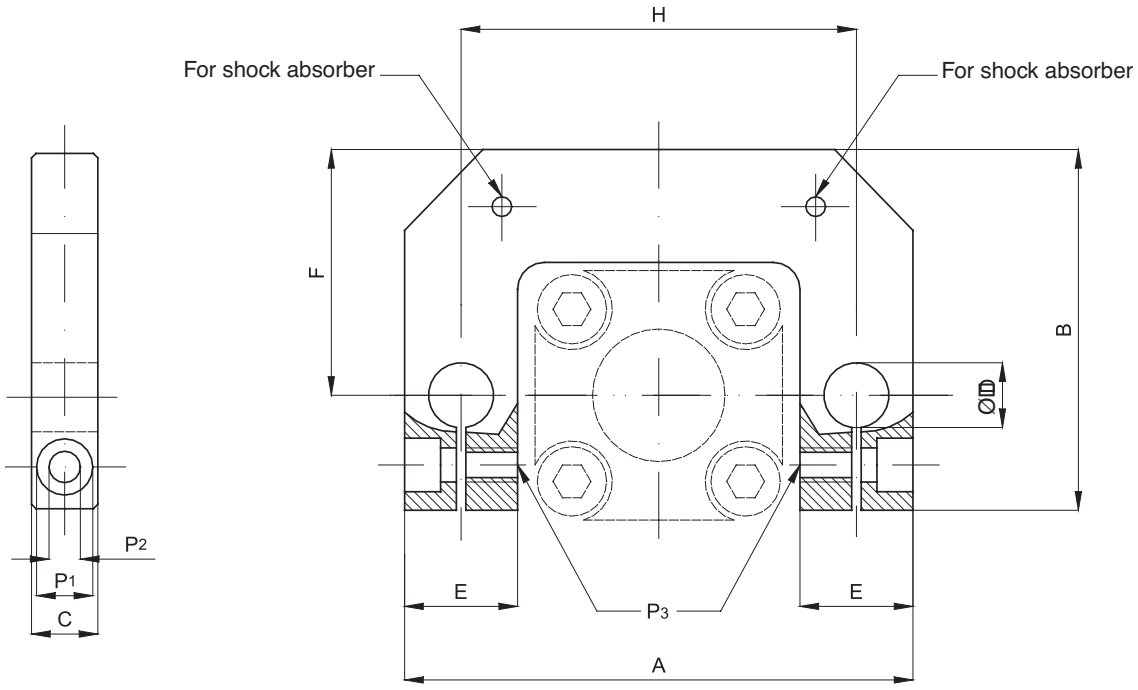

Code	Item	For cyl. ø mm	A	B	C	D ø	E	F	H	P_1	P_2	P_3
077901	SCSG032	32	95	68	12	12	21	46	74	10,5	6,5	M6
077902	SCSG040	40	113	78	15	15	26	56	87	10,5	6,5	M6
077903	SCSG050	50	135	98	17	20	30	66	104	10,5	6,5	M6
077904	SCSG063	63	149	118	17	20	31	78	119	13,5	8,5	M8
077905	SCSG080	80	187	142	20	25	39	99	148	13,5	8,5	M8
077906	SCSG100	100	211	163	20	25	39	114	172	13,5	8,5	M8

For shock absorbers see page 1.105.1.

Notes

GENERAL INDEX CILINDERS INDEX

Piston-rod brake for Cylinders ISO 6432

Bores from 20 to 25 mm

Standard executions		
Version	Symbol	Type
Normally closed	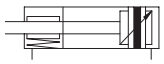	ABS....CRD
Normally open	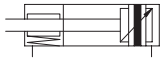	ABS....ARD



Series of piston rod brakes rod units for cylinders ISO 6432 with pneumatic releasing and rod mechanical locking obtained through a double jaw (the locking is pneumatic in the type normally open).
For the application of the locking rod unit to a cylinder ISO 6432 it is necessary to order the cylinder with the rod arranged for this (the extended one in hardened steel, option B; see pages 1.2.1-1.2.10).
Used in applications when compressed air failure would present hazardous cylinder movement.

How to order: ABS020CRD

ABS	020	CRD
Type	Bore	Option

For standard items, codes and dimensions see tables page 1.75.5.

Technical data		
Fluid	Compressed filtered air with or without lubrication	
Pressure range	4 ÷ 8 bar	
Temperature range	-10 °C ÷ + 80°C	
Materials	Body:	Anodised aluminium
	Jaws:	Brass
	Seals:	Nitrile rubber (NBR)
	Locking cylinder:	Anodised aluminium

Cylinder bore (mm)	Locking force (N)
20	300
25	400

The locking force refers to static load; slidings can happen exceeding the maximum indicated values.
The locking rod unit must be unclamped only when both chambers of the cylinder are in pressure, otherwise the cylinder rod could move not uniformly and this could cause damage to the application.

Seal kits not available.

Piston-rod brake for Cylinders ISO 6432

Bores from 20 to 25 mm

type: **ABS**

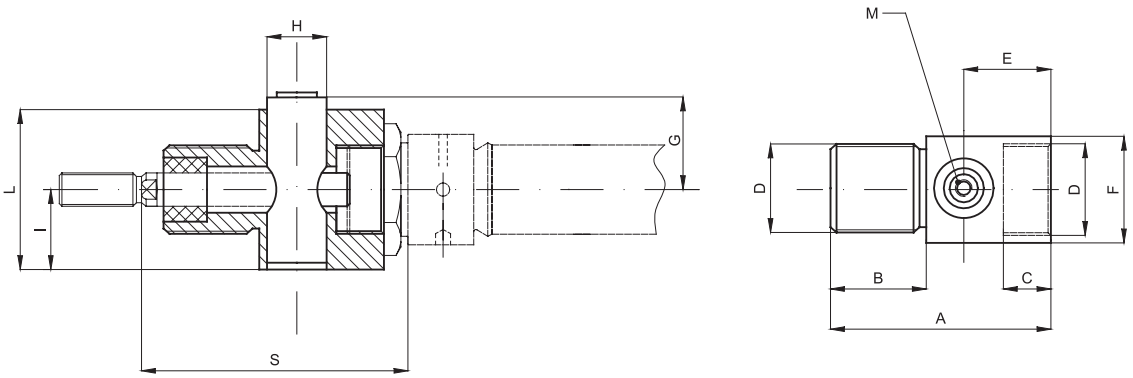

For cylinder ø mm	A	B	C	E	F	G	H	I	D	L	M	S
20	58	23	12	24	27	21	20	19	M22x1,5	38	M5	72
25	58	23	12	24	27	21	20	19	M22x1,5	38	M5	74

Normally closed

Code	Item	For cylinder ø mm
042022	ABS 0020CRD	20
042023	ABS 0025CRD	25

Normally open

Code	Item	For cylinder ø mm
042032	ABS 0020ARD	20
042033	ABS 0025ARD	25

Piston-rod brake for Cylinders DIN ISO 6431 and VDMA 24 562

Bores from 32 to 125 mm

Standard executions		
Version	Symbol	Type
Normally closed	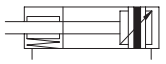	ABS....CRD
Normally open	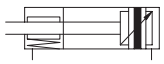	ABS....ARD

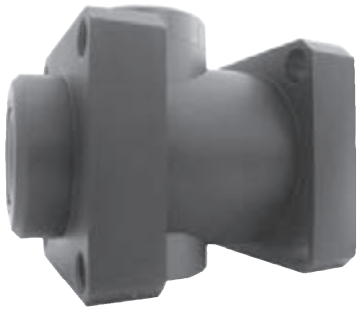

Series of locking rod units for cylinders DIN ISO 6431 and VDMA 24562 with pneumatic releasing and rod mechanical locking obtained through a double jaw (the locking is pneumatic in the type normally open).
For the application of the locking rod unit to a cylinder IDIN ISO 6431 and VDMA 24562 it is necessary to order the cylinder with the rod arranged for this (the extended one in hardened steel, option B; see page 1.5.1).
Used in applications when compressed air failure would present hazardous cylinder movement.

How to order: ABS0050CRD

ABS	050	CRD
Type	Cylinder bore	Option

For standard items, codes and dimensions see tables page 1.75.15.

Technical data		
Fluid	Compressed filtered air with or without lubrication	
Pressure range	4 ÷ 8 bar	
Temperature range	-10 °C ÷ + 80°C	
Materials	Body:	Anodised aluminium
	Jaws:	Brass
	Seals:	Nitrile rubber (NBR)
	Locking cylinder:	Anodised aluminium

Cylinder bore (mm)	Locking force (N)
32	650
40	1100
50	1600
63	2500
80	4000
100	6300
125	8700

The locking force refers to static load; slidings can happen exceeding the maximum indicated values.
The locking rod unit must be unclamped only when both chambers of the cylinder are in pressure, otherwise the cylinder rod could move not uniformly and this could cause a damage to the application.

Seal kits not available.

Piston-rod brake for Cylinders DIN ISO 6431 and VDMA 24 562

Bores from 32 to 125 mm

type: **ABS**

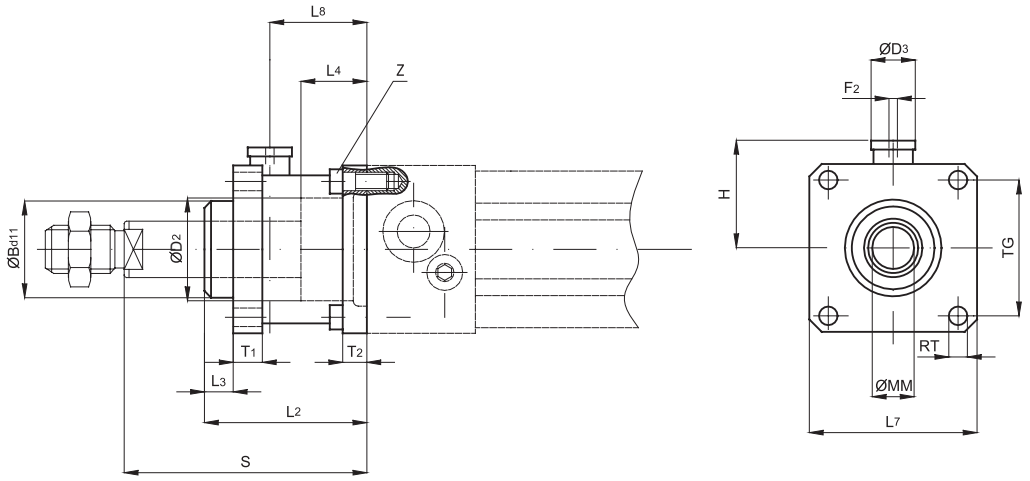

For cylinder ø mm	B ø	D_2 ø	D_3 ø	F_2	H	L_2	L_3	L_4	L_7	L_8	MM ø	RT	T_1	T_2	TG	Z	S
32	30	30,5	20	M5	25,5	58	10	20,5	45	31,5	12	M6	13	8	32,5	M6x20	74
40	35	35	24	1/8”	30	65	10	22,5	50	36	16	M6	13	8	38	M6x20	85
50	40	40	30	1/8”	36	82	12	29,5	60	45,5	20	M8	16	15	46,5	M8x30	107
63	45	45	38	1/8”	40	82	12	29,5	70	49,5	20	M8	16	15	56,5	M8x30	107
80	45	45	48	1/8”	50	110	20	35	90	61	25	M10	20	18	72	M10x35	136
100	55	55	48	1/8”	58	115	23	39	105	65	25	M10	20	18	89	M10x35	143
125	60	60	65	1/8”	80	167	45	51	140	86,5	32	M12	30	22	110	M12x40	187

Normally closed

Code	Item	For cylinder ø mm
042001	ABS 032CRD	32
042002	ABS 040CRD	40
042003	ABS 050CRD	50
042004	ABS 063CRD	63
042005	ABS 080CRD	80
042006	ABS 100CRD	100
042007	ABS 125CRD	125

Normally open

Code	Item	For cylinder ø mm
042011	ABS 032ARD	32
042012	ABS 040ARD	40
042013	ABS 050ARD	50
042014	ABS 063ARD	63
042015	ABS 080ARD	80
042016	ABS 100ARD	100
042017	ABS 125ARD	125

Angular Hand Grips

Bores from 10 to 32 mm *Double acting*

Executions		
Version	Code	Item
Bore 10 mm	075023	10PAB
Bore 16 mm	075004	16PAB
Bore 20 mm	075006	20PAB
Bore 25 mm	075008	25PAB
Bore 32 mm	075010	32PAB



Series of pneumatic angular hand grips available in 5 different sizes.
They are standard magnetic with groves on the body allowing the direct mounting of magnetic reed switches.

For magnetic reed switch type ASC see from page 1.110.1.
For mounting accessories see from page 1.80.60.

Options	Suffix
Single acting	/ SE

How to order : 20PAB/SE

20	PAB	/SE
Bore	Type	Option

Technical data						
Type		10PAB	16PAB	20PAB	25PAB	32PAB
Fluid		Compressed filtered air. Lubrication, if be used, must be continous.				
Pressure range		1,5 ÷ 7 bar				
Temperature range		0 °C ÷ + 80°C				
Max. operation frequency		180 cycle / min.				
Lubrication		Piston : with or without lubrication				
		Levers : lubrication is required on moving parts				
Holding moments M* (Ncm)	Closing*	1,6 x P	8 x P	17 x P	34 x P	61 x P
	Opening*	2,6 x P	11 x P	23 x P	43 x P	81 x P
Effective gripping force F (N)		F = M / L** x 0,85				
Maximum length of gripping point L (mm)		30	40	60	70	85
Weight (g)		40	100	200	330	540
Lever open/close angle		- 10° ÷ + 30°				
Ports		M3	M5			

* P = operating pressure (bar)
** L = distance of the gripping point (mm)

Materials

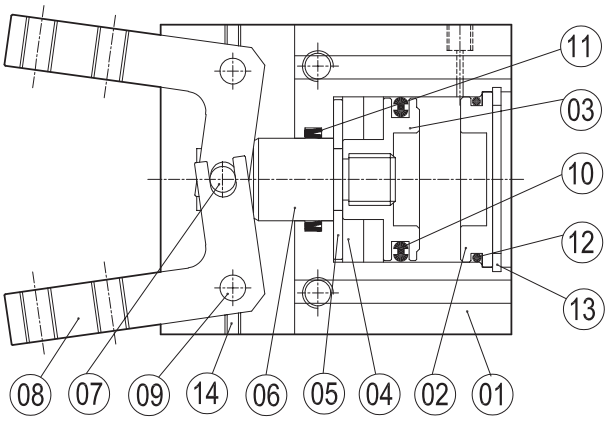

N.	Component	Material
1	Body	Aluminium
2	End cover	Brass
3	Piston	Brass
4	Magnet	Plastic magnet
5	Magnet holder	Brass
6	Piston rod	Stainless steel
7	Piston rod pin	Steel
8	Fingers	Steel alloy
9	Slide pin	Steel
10	Piston seal	NBR
11	Piston rod seal	NBR
12	End cover O-ring	NBR
13	Seeger	Steel
14	Hexagonal screw	Steel alloy

Gripping forces

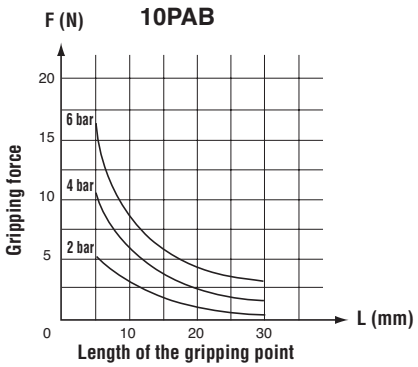

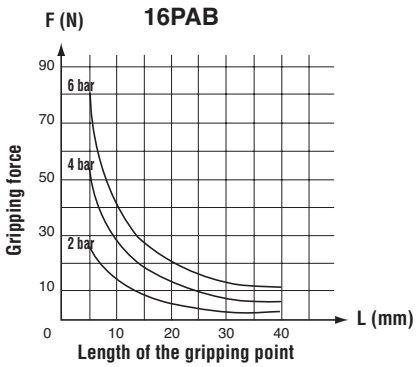

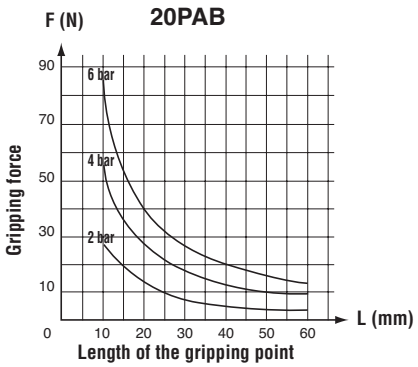

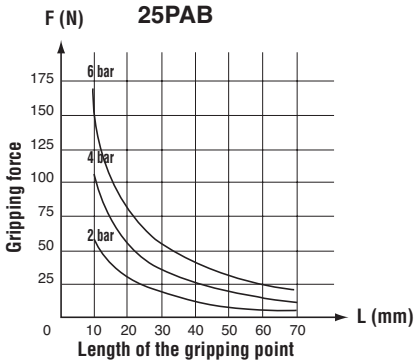

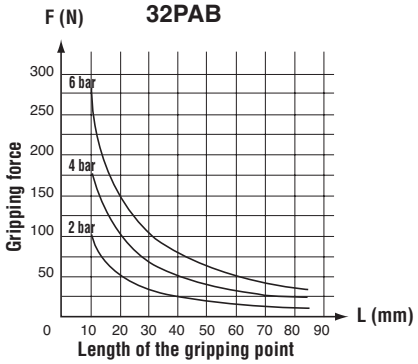

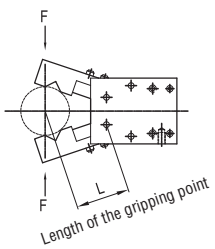

type: **10PAB**

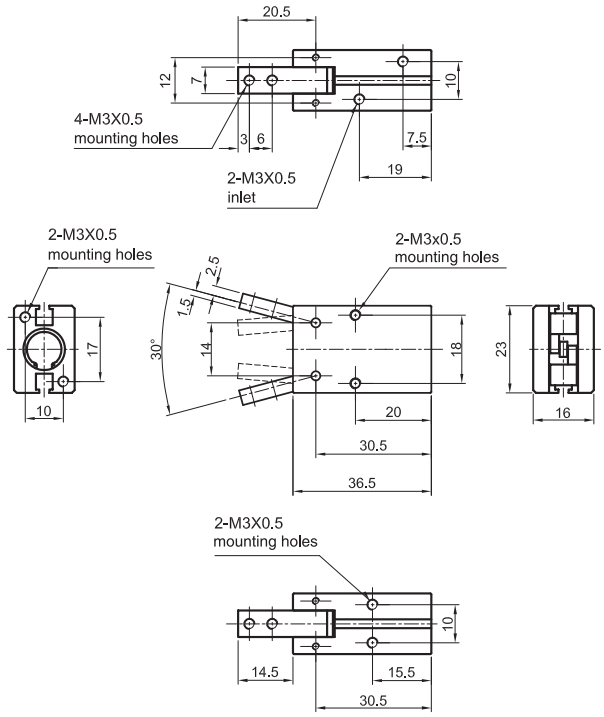

GENERAL INDEX
CILINDERS INDEX

1

type: **16PAB**

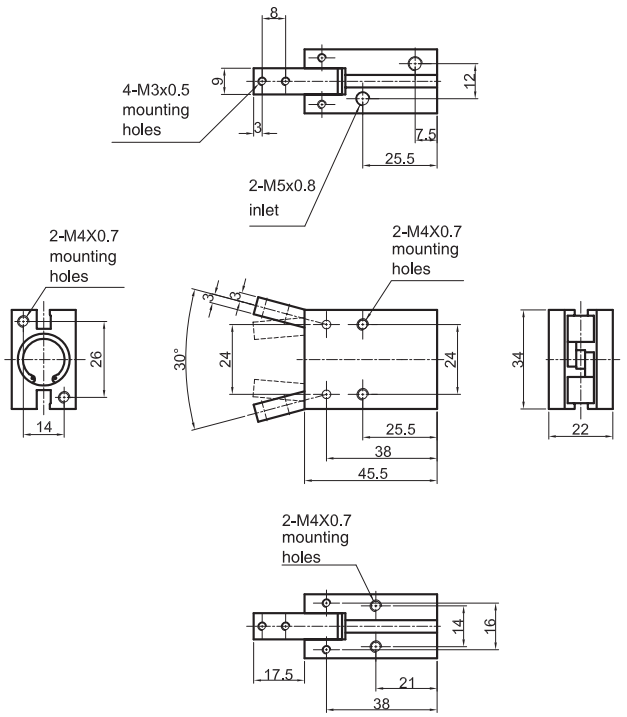

type: **20PAB**

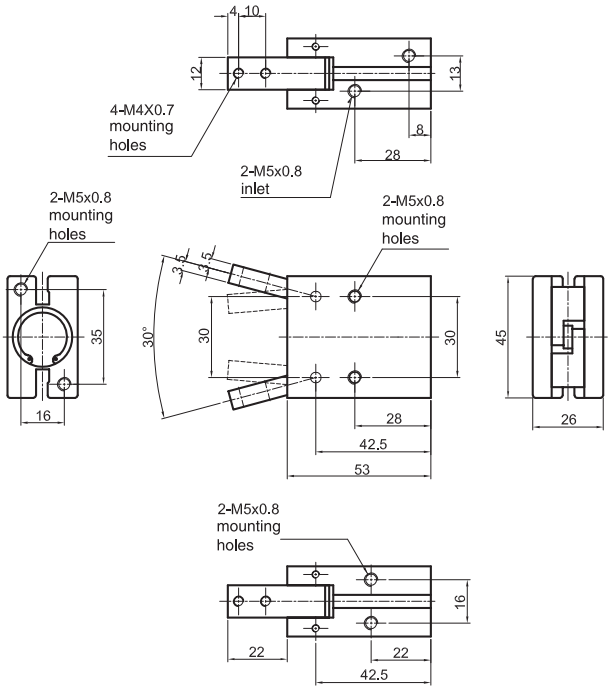

type: **25PAB**

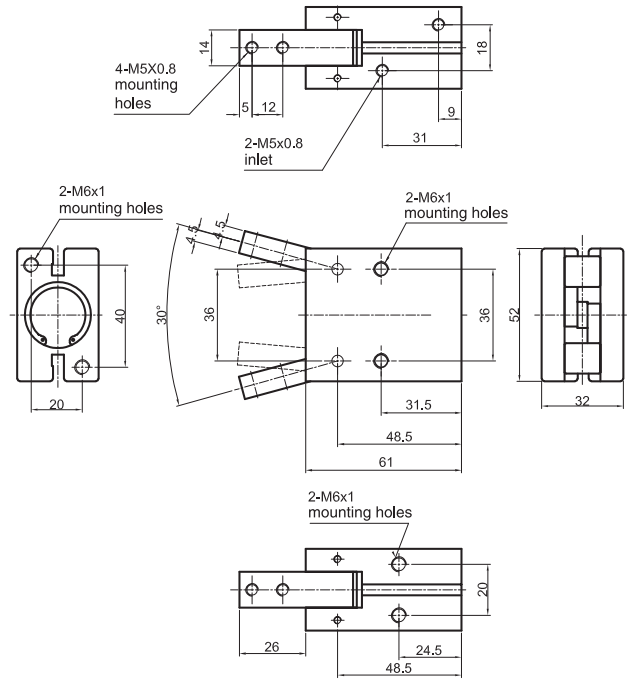

type: **32PAB**

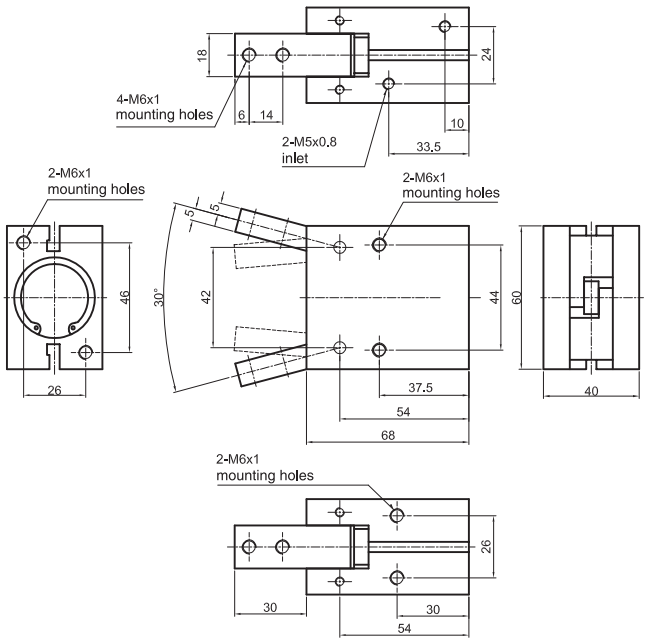

Notes

GENERAL INDEX CILINDERS INDEX

Angular Hand Grips, 180°

Bores from 16 to 32 mm *Double acting*

Executions		
Version	Code	Item
Bore 16 mm	075013	16PAC
Bore 20 mm	075017	20PAC
Bore 25 mm	075024	25PAC
Bore 32 mm	075062	32PAC



Series of pneumatic 180° angular hand grips available in 4 different sizes.

They are standard magnetic with groves on the body allowing the direct mounting of magnetic reed switches.

For magnetic reed switches type ASC see from page 1.110.1.
For mounting accessories see from page 1.80.60.

How to order : 25PAC

25	PAC
Bore	Type

Technical data					
Type		16 PAC	20 PAC	25 PAC	32 PAB
Fluid		Compressed filtered air. Lubrication, if be used, must be continous.			
Pressure range		1,5 ÷ 7 bar			
Temperature		0 °C ÷ + 80°C			
Max. operation frequency		180 cycle / min.			
Lubrication		Piston : with or without lubrication			
		Levers : lubrication is required on moving parts			
Holding moments M* (Ncm)	Closing*	8 x P	17 x P	34 x P	61 x P
	Opening*	11 x P	23 x P	43 x P	81 x P
Effective gripping force F(N)		F = M / L** x 0,9			
Maximum length of gripping point L (mm)		80	100	120	140
Weight (g)		140	240	400	700
Lever open/close angle		- 1° ÷ + 186°			
Ports		M5			

* P = operating pressure (bar)
** L = distance of the gripping point (mm)

Materials

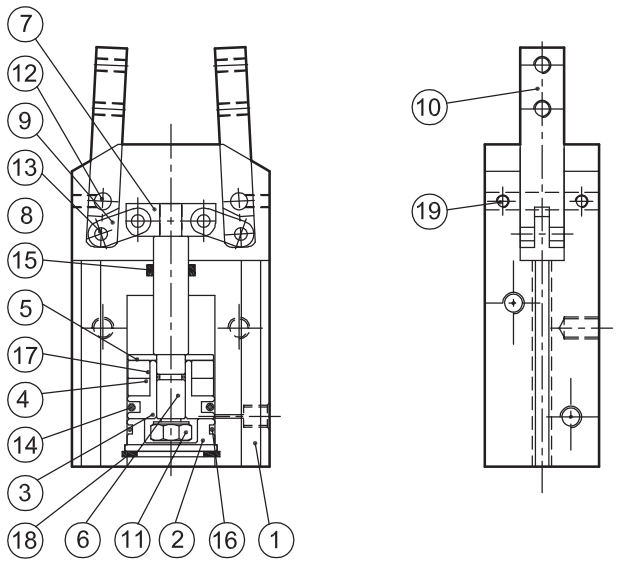

N.	Component	Material
1	Body	Aluminium
2	End cover	Aluminium
3	Piston	Brass
4	Magnet	Plastic magnet
5	Magnet holder	Brass
6	Piston rod	Stainless steel
7	End piston rod joiner	Steel alloy
8	Piston rod pin	Steel
9	Action lever	Steel alloy
10	Fingers	Steel alloy
11	Nut	Steel
12	Slide pin	Steel
13	Action lever pin	Steel
14	Piston seal	NBR
15	Piston rod seal	NBR
16	End cover O-ring	NBR
17	Piston rod O-ring	NBR
18	Seeger	Steel
19	Hexagonal screw	Steel alloy

Gripping forces

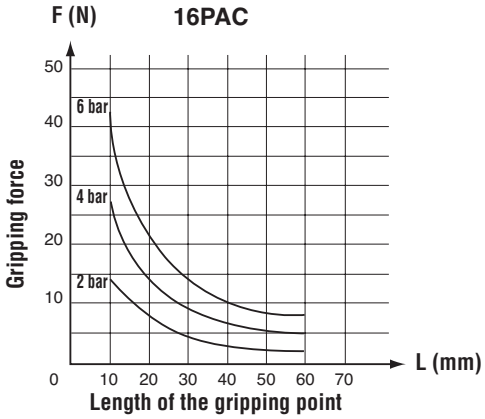

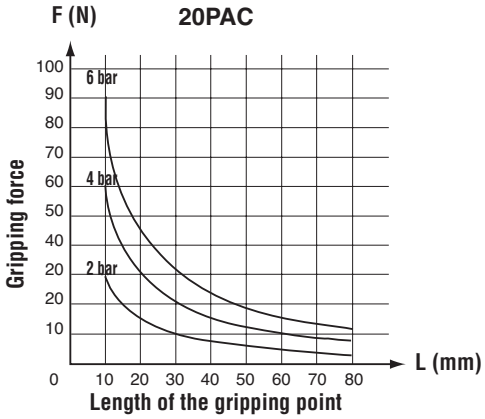

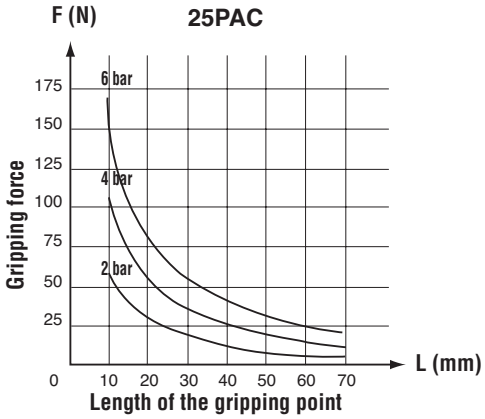

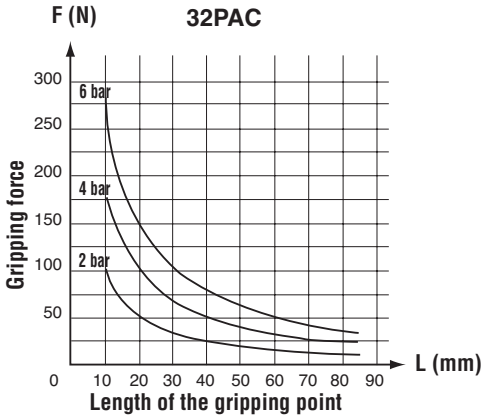

1

type: **16PAC**

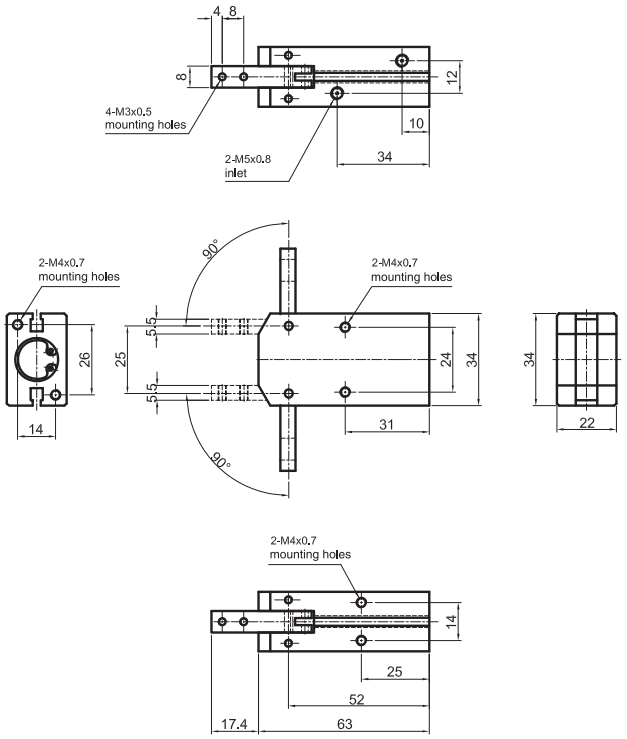

type: **20PAC**

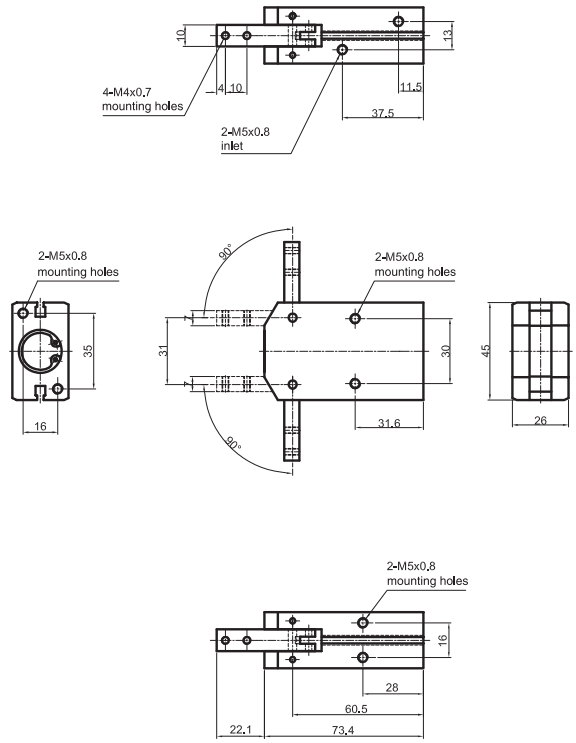

type: **25PAC**

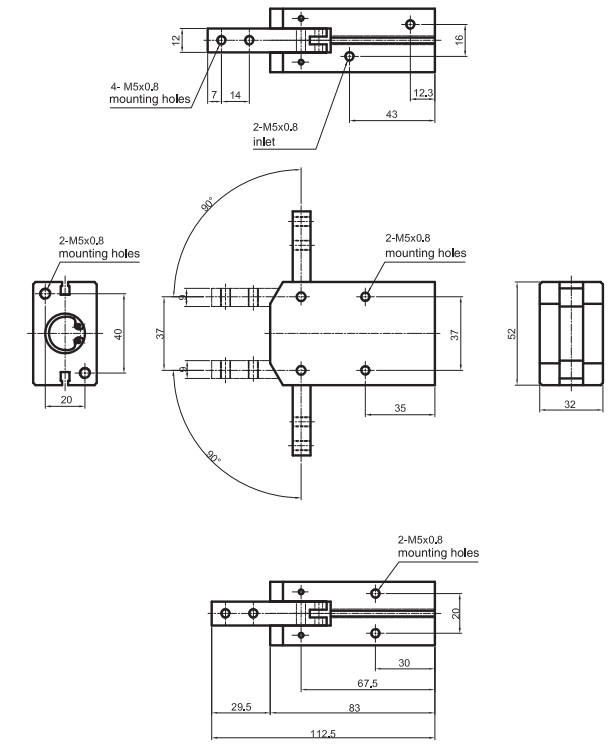

type: **32PAC**

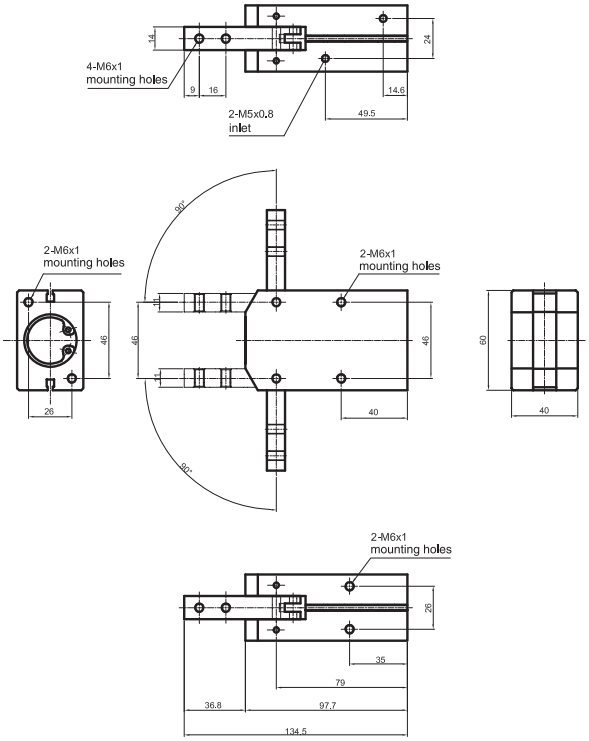

Notes

GENERAL INDEX CILINDERS INDEX

Parallel Hand Grips

Bores from 10 to 32 mm *Double acting*

Executions		
Version	Code	Item
Bore 10 mm	075025	10PPB
Bore 16 mm	075027	16PPB
Bore 20 mm	075063	20PPB
Bore 25 mm	075028	25PPB
Bore 32 mm	075029	32PPB



Series of pneumatic parallel hand grips available in 5 different sizes.

They are standard magnetic with groves on the body allowing the direct mounting of magnetic reed switches.

For magnetic reed switch type ASC see from page 1.110.1.
For mounting accessories see from page 1.80.60.

How to order : 16PPB

16	PPB
Bore	Type

Technical data						
Type		10PPB	16PPB	20PPB	25PPB	32PPB
Fluid		Compressed filtered air. Lubrication, if be used, must be continous.				
Pressure range		1,5 ÷ 7 bar				
Temperature range		0 °C ÷ + 80°C				
Max. operation frequency		180 cycle / min.				
Lubrication		Piston : with or without lubrication Levers : lubrication is required on moving parts				
Theoretical holding force M* (N)	Closing	5	18	35	60	85
	Opening	8	24	47	75	100
Maximum length of gripping point L (mm)		30	40	60	70	85
Weight (g)		50	140	250	410	680
Stroke of open/close (mm)		4	8	12	14	16
Ports		M3	M5			

* Gripping point 30 mm at 5 bar

Materials

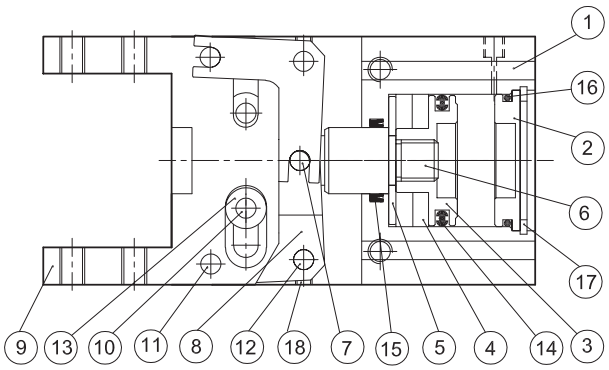

N.	Component	Material
1	Body	Aluminium
2	End cover	Brass
3	Piston	Brass
4	Magnet	Plastic magnet
5	Magnet holder	Brass
6	Piston rod	Stainless steel
7	Piston rod pin	Steel
8	Action lever	Steel alloy
9	Fingers	Steel alloy
10	Slide guide pin	Steel
11	Slide pin	Steel
12	Action lever pin	Steel
13	Ring	Steel alloy
14	Piston seal	NBR
15	Piston rod seal	NBR
16	End cover O-ring	NBR
17	Seeger	Steel
18	Hexagonal screw	Steel alloy

Gripping forces

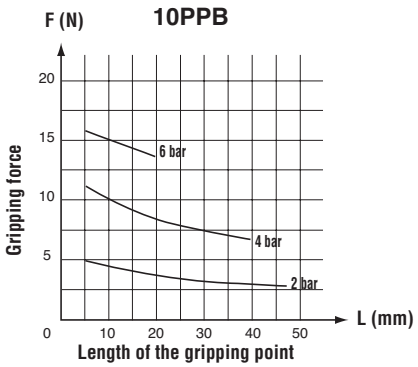

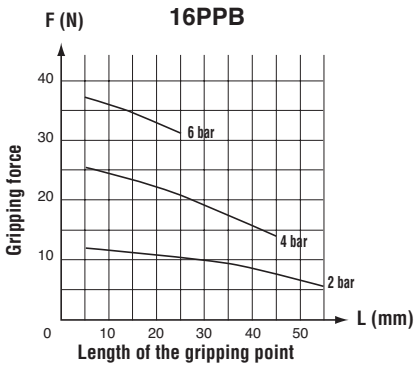

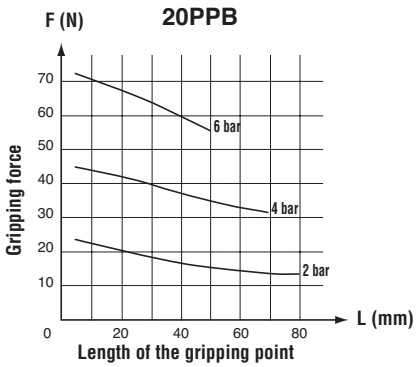

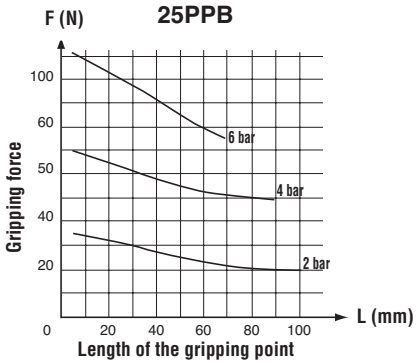

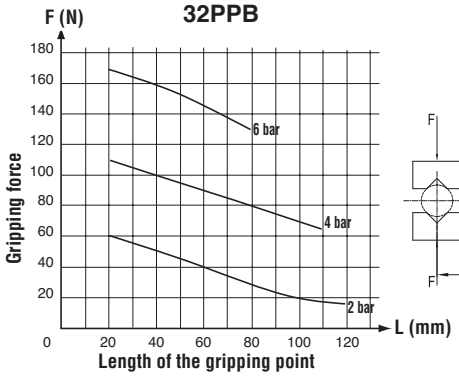

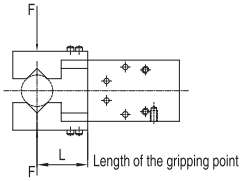

type: **10PPB**

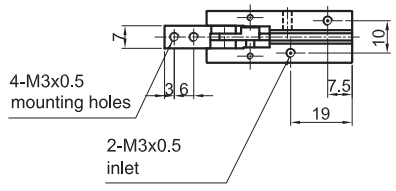

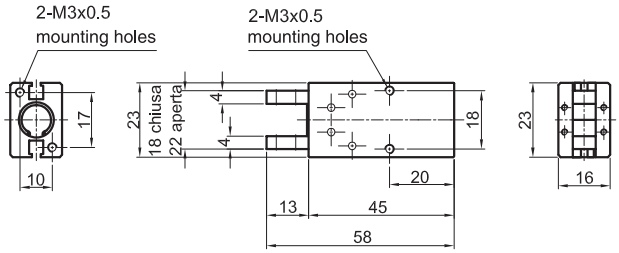

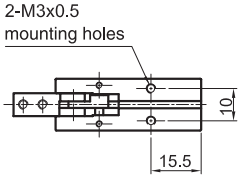

type: **16PPB**

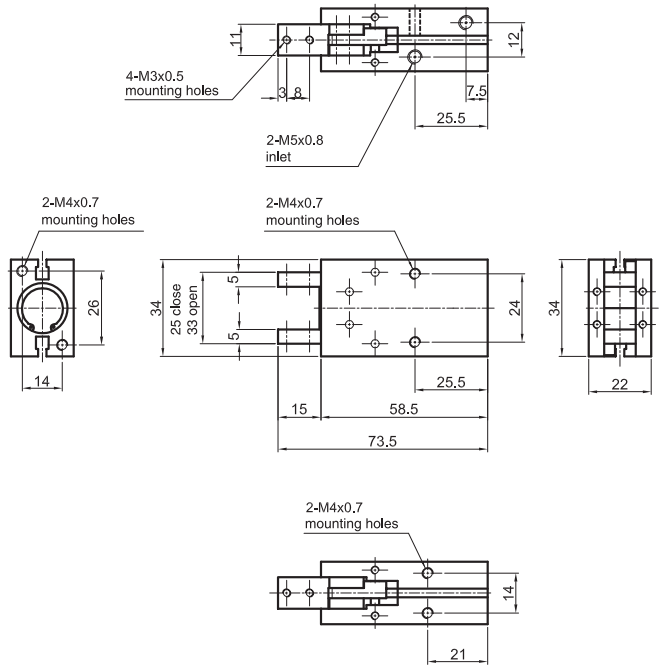

type: **20PPB**

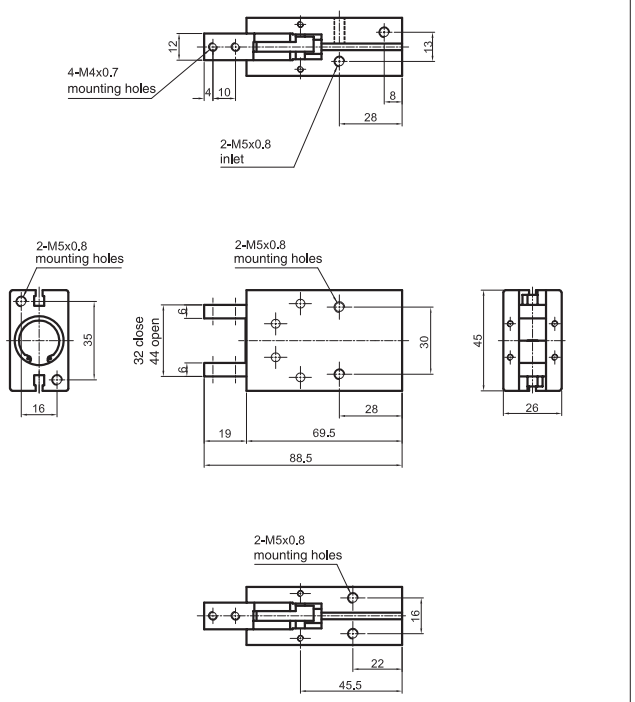

type: **25PPB**

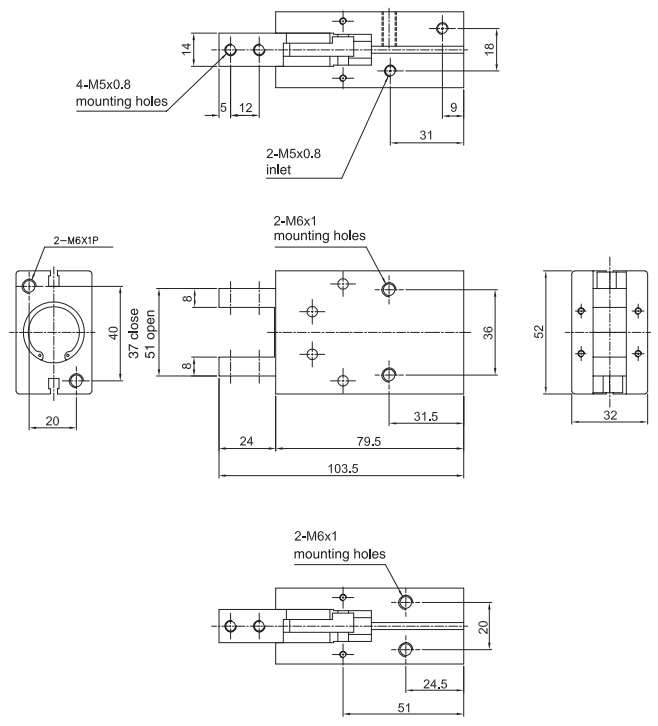

type: **32PPB**

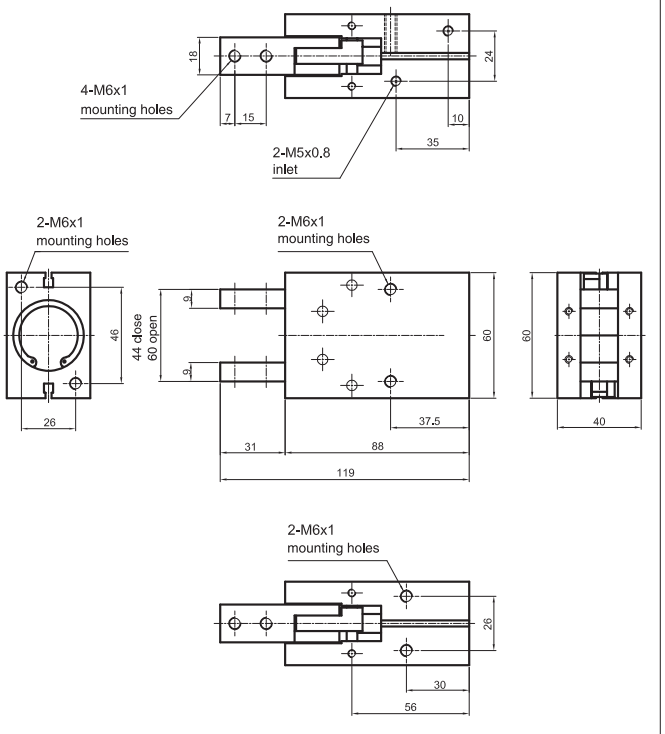

Guided Parallel Hand Grips

Bores from 16 to 32 mm *Double acting*

Executions		
Version	Code	Item
Bore 16 mm	075030	16PPC
Bore 20 mm	075031	20PPC
Bore 25 mm	075034	25PPC
Bore 32 mm	075035	32PPC



Series of pneumatic guided parallel hand grips available in 4 different sizes.

They are standard magnetic with groves on the body allowing the direct mounting of magnetic reed switches.

For magnetic reed switch type ASC see from page 1.110.1.
For mounting accessories see from page 1.80.60.

How to order : 20PPC

20	PPC
Bore	Type

Technical data					
Type		16PPC	20PPC	25PPC	32PPB
Fluid		Compressed filtered air. Lubrication, if be used, must be continous.			
Pressure range		1,5 ÷ 7 bar			
Temperature range		0 °C ÷ + 80°C			
Max. operation frequency		180 cycle / min.			
Lubrication		Piston : with or without lubrication Levers : lubrication is required on moving parts			
Holding moments M* (N)	Closing	18	35	60	85
	Opening	24	47	75	100
Maximum length of gripping point L (mm)		40	60	70	85
Weight (g)		200	600	800	1300
Stroke of open/close (mm)		6	8	14	16
Ports		M5			

* P = 5 bar

Materials

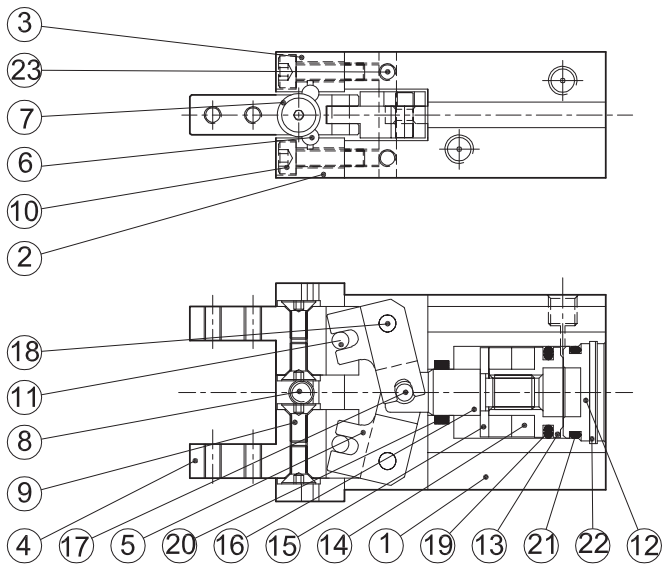

N.	Component	Material
1	Body	Aluminium
2	Front guide	Steel alloy
3	Rear guide	Steel alloy
4	Fingers	Steel alloy
5	Action lever	Steel alloy
6	Roll ball	Molybdenum chromium steel
7	Side track stopper	Steel
8	Side track screw	Steel alloy
9	Stopper screw	Steel alloy
10	Screw	Aluminium alloy
11	Pin	Steel
12	End cover	Brass
13	Piston	Brass
14	Magnet	Plastic magnet
15	Magnet holder	Brass
16	Piston rod	Stainless steel
17	Guide pin	Steel
18	Pin	Steel
19	Piston seal	NBR
20	Piston rod seal	NBR
21	End cover O-ring	NBR
22	Seeger	Steel
23	Hexagonal screw	Steel alloy

Gripping forces

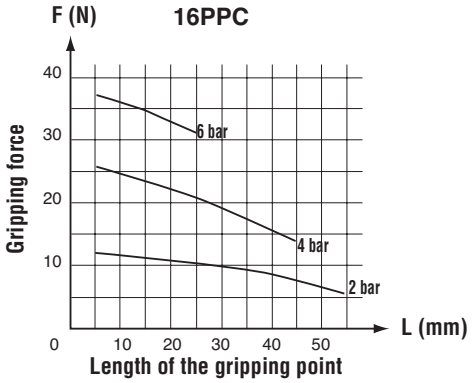

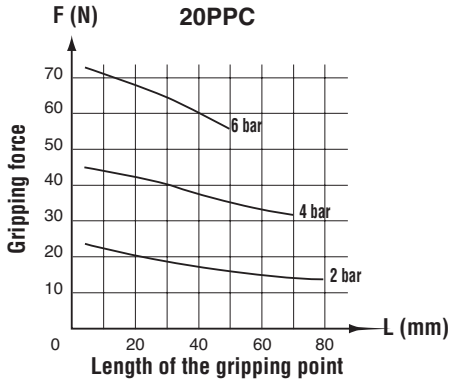

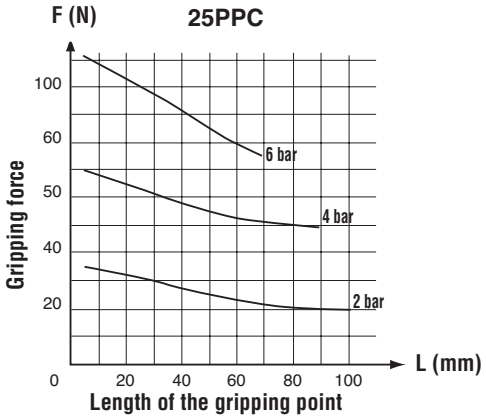

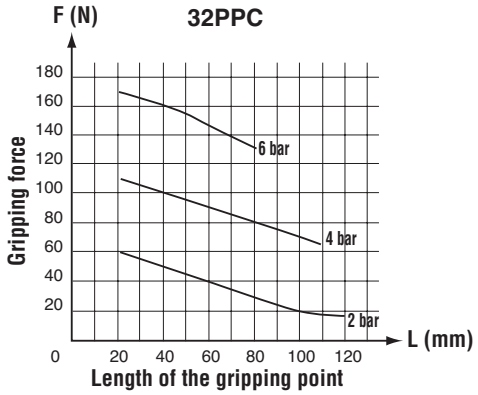

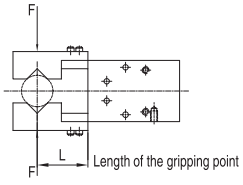

Guided Parallel Hand Grips

Bores from 16 to 32 mm *Double acting*

type: **16PPC**

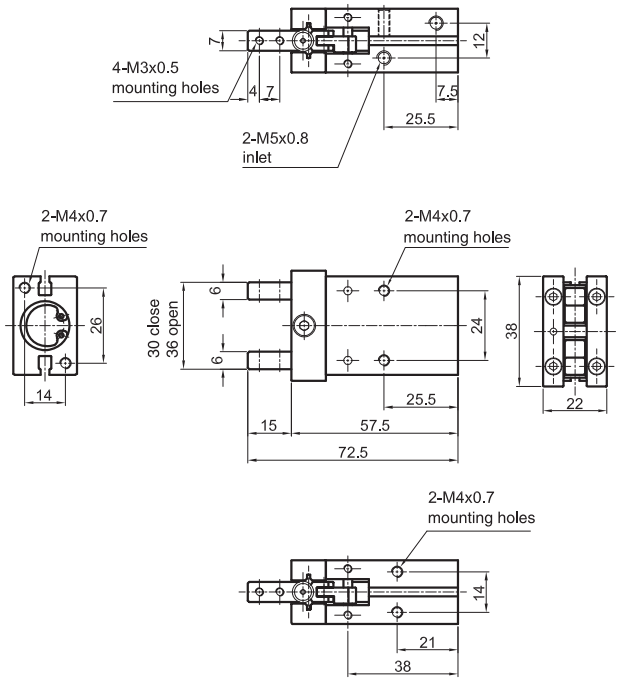

type: **20PPC**

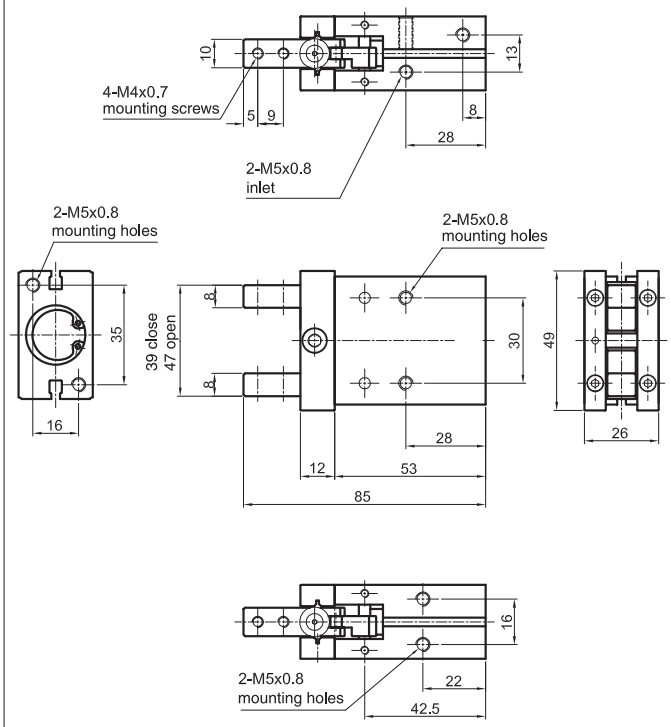

type: **25PPC**

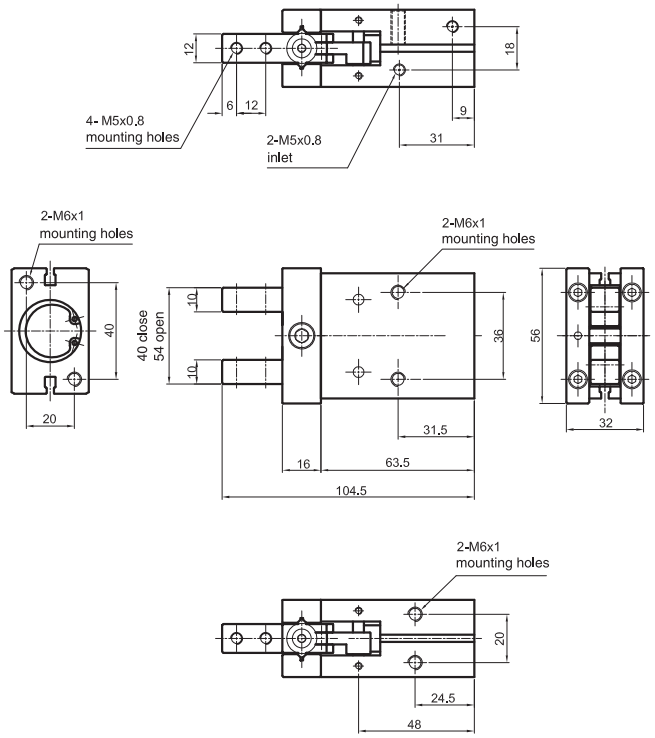

type: **32PPC**

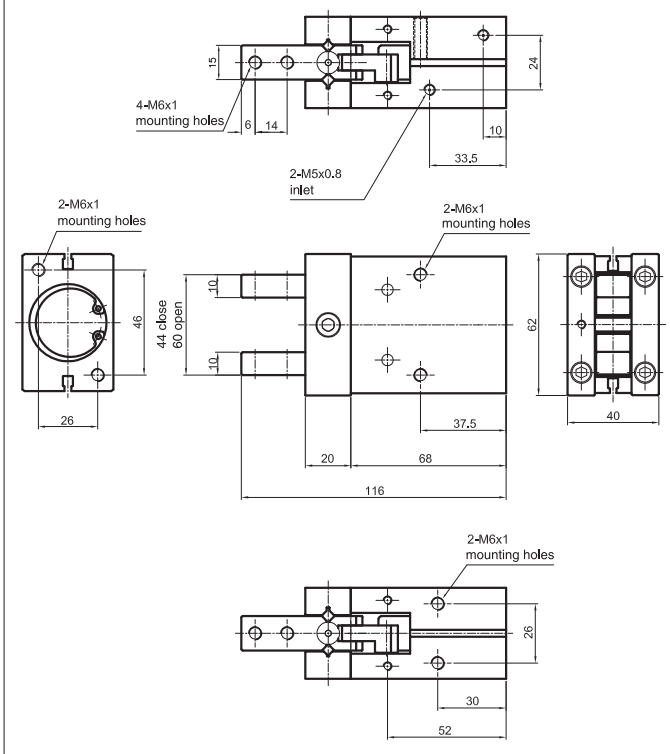

GENERAL INDEX CILINDERS INDEX

Executions		
Version	Code	Item
Bore 10 mm, stroke 20 mm	075037	10/20PPD
Bore 10 mm, stroke 40 mm	075038	10/40PPD
Bore 10 mm, stroke 60 mm	075039	10/60PPD
Bore 16 mm, stroke 30 mm	075040	16/30PPD
Bore 16 mm, stroke 60 mm	075041	16/60PPD
Bore 16 mm, stroke 80 mm	075042	16/80PPD
Bore 20 mm, stroke 40 mm	075044	20/40PPD
Bore 20 mm, stroke 80 mm	075045	20/80PPD
Bore 20 mm, stroke 100 mm	075047	20/100PPD
Bore 25 mm, stroke 50 mm	075048	25/50PPD
Bore 25 mm, stroke 100 mm	075049	25/100PPD
Bore 25 mm, stroke 120 mm	075050	25/120PPD
Bore 32 mm, stroke 70 mm	075051	32/70PPD
Bore 32 mm, stroke 120 mm	075052	32/120PPD
Bore 32 mm, stroke 160 mm	075002	32/160PPD

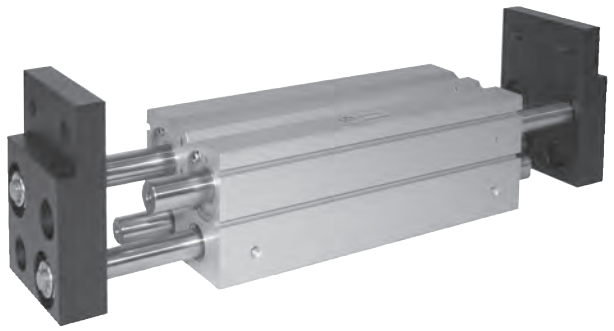

Series of pneumatic parallel hand grips with long stroke available in 5 different sizes.

They are standard magnetic with groves on the body allowing the direct mounting of magnetic reed switches.

For magnetic reed switch type ASC see from page 1.110.1.

How to order : 25/50PPD

25	/	50	PPD
Bore	/	Stroke	Type

Technical data					
Type	10PPD	16PPD	20PPD	25PPD	32PPD
Fluid	Compressed filtered air. Lubrication, if be used, must be continous.				
Pressure range	1,5 ÷ 7 bar				
Temperature range	0 °C ÷ + 80°C				
Max. operation frequency	40 cycle / min.				
Effective gripping force (N)*	14	44	73	128	191
Maximum length of gripping point L (mm)	40	60	80	90	100
Stroke of open/close (mm)	20,40,60	30,60,80	40,80,100	50,100,120	70,120,160
Ports	M5				1/8”

* Gripping point 30 mm at 5 bar

Parallel Hand Grips with long stroke

Bores from 10 to 32 mm *Double acting*

Materials

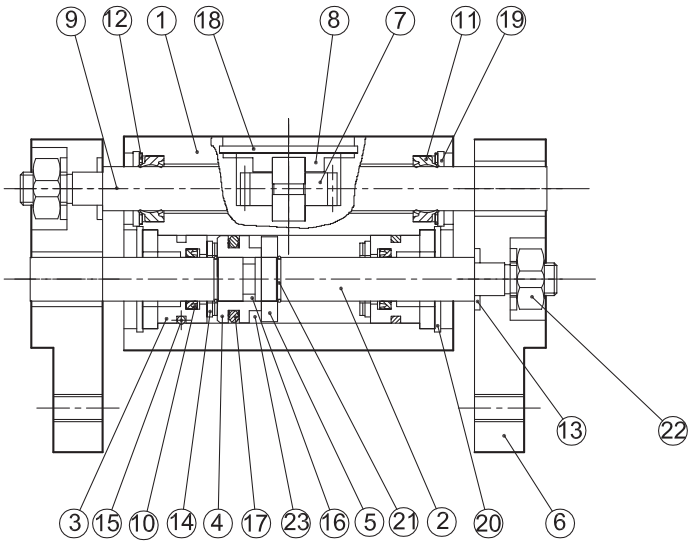

N.	Component	Material
1	Body	Aluminium
2	Piston rod	Stainless steel
3	End cover	Aluminium
4	Piston	Brass
5	Magnet holder	Brass
6	Fingers	Steel alloy
7	Gear rod	Carbon steel
8	Gear cover	Iron
9	Gear	Stainless steel
10	Piston rod seal	NBR
11	Guide rod seal	NBR
12	Seeger	Iron
13	Cushion distancer	Iron
14	Piston rod cushion	Polyurethane
15	End cover O-ring	NBR
16	Piston seal	NBR
17	Piston O-ring	NBR
18	Seeger	Steel
19	Seeger	Steel
20	Seeger	Steel
21	Seeger	Steel
22	Nut	Steel
23	Magnet	Plastic magnet

type: **10 / .. PPD**

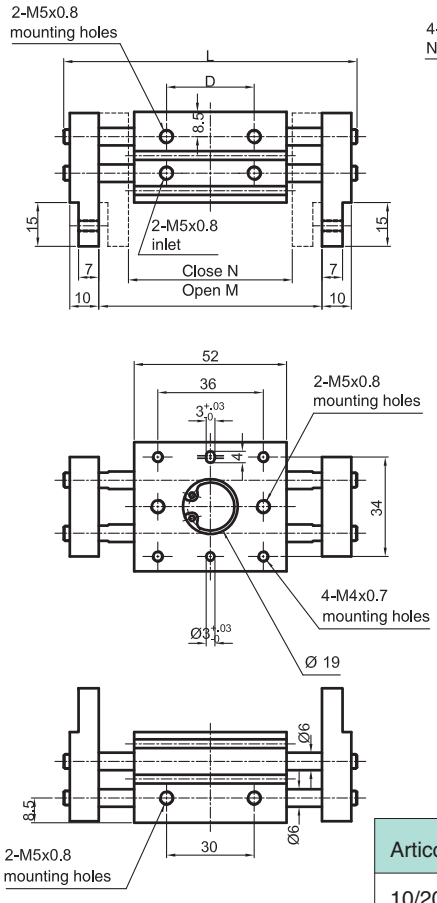

Articolo	A	B	C	D	L	M	N
10/20PPD	52	36	30	30	100 (80)	76	56
10/40PPD	68	52	46	46	136 (96)	112	72
10/60PPD	86	70	64	64	174 (114)	150	90

type: **16 / .. PPD**

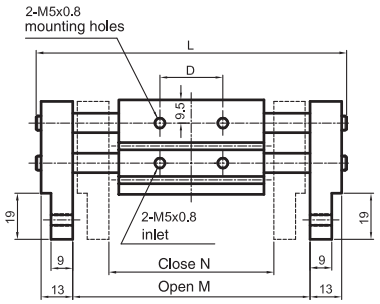

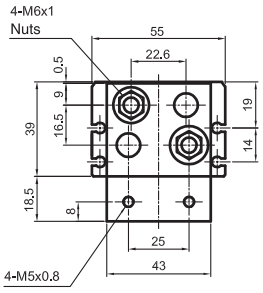

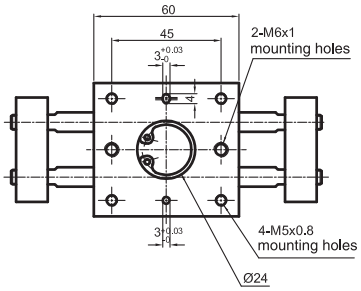

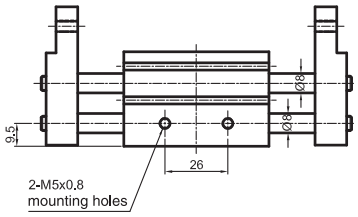

Item	A	B	C	D	L	M	N
16/30PPD	60	45	26	26	128 (98)	98	68
16/60PPD	90	75	56	56	188 (128)	158	98
16/80PPD	110	95	76	76	228 (148)	198	118

type: **20 / .. PPD**

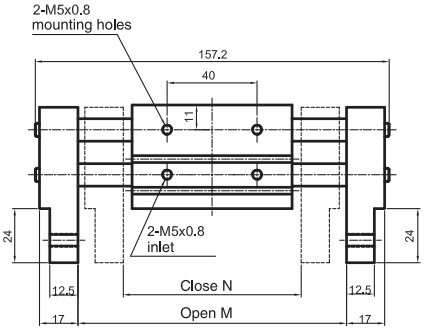

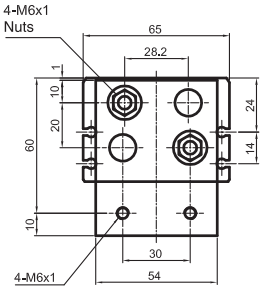

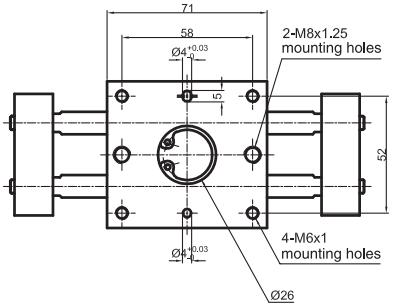

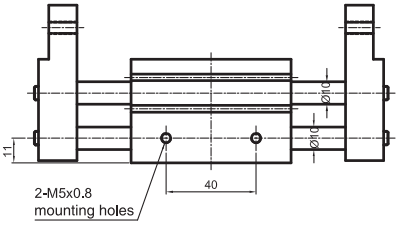

Item	A	B	C	D	L	M	N
20/40PPD	71	58	40	40	157 (117)	119	79
20/80PPD	113	100	82	82	239 (159)	201	121
20/100PPD	133	120	102	102	279 (179)	241	141

type: **25 / .. PPD**

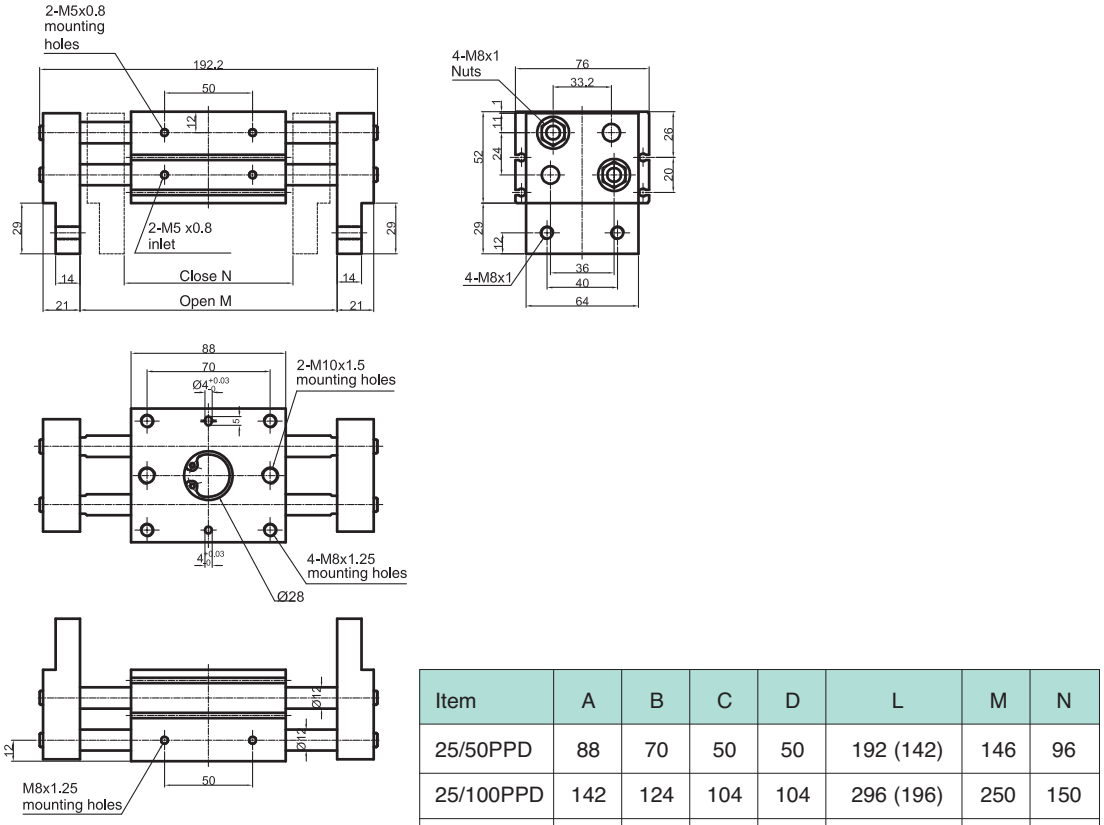

Item	A	B	C	D	L	M	N
25/50PPD	88	70	50	50	192 (142)	146	96
25/100PPD	142	124	104	104	296 (196)	250	150
25/120PPD	160	142	122	122	334 (214)	288	168

type: **32 / .. PPD**

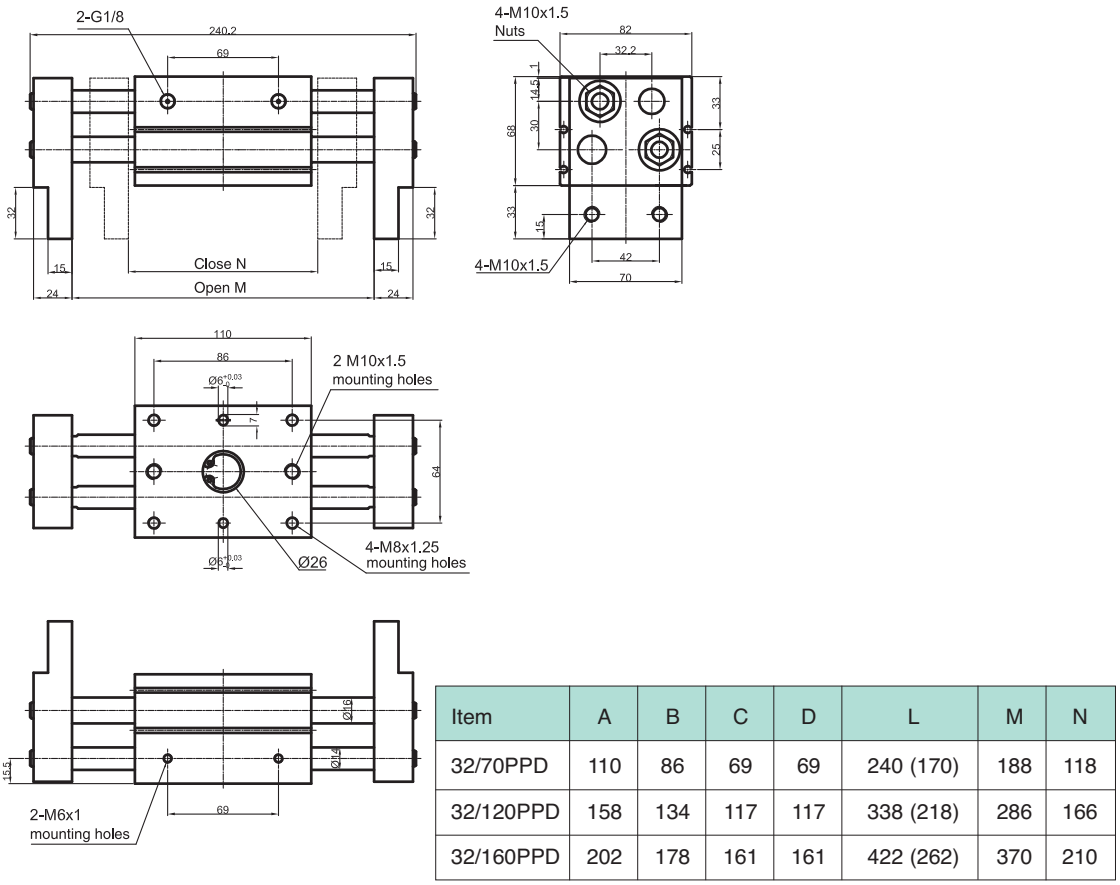

Item	A	B	C	D	L	M	N
32/70PPD	110	86	69	69	240 (170)	188	118
32/120PPD	158	134	117	117	338 (218)	286	166
32/160PPD	202	178	161	161	422 (262)	370	210

Parallel Hand Grips with 3 fingers

Bores from 25 to 63 mm *Double acting*

Executions		
Version	Code	Item
Bore 25 mm	075053	25PPE
Bore 32 mm	075054	32PPE
Bore 40 mm	075055	40PPE
Bore 50 mm	075056	50PPE
Bore 63 mm	075057	63PPE



Series of pneumatic parallel hand grips with 3 fingers available in 5 different sizes.
They are standard magnetic with groves on the body allowing the direct mounting of magnetic reed switches.

For magnetic reed switch type ASC see from page 1.110.1.

How to order : 32PPE

32	PPE
Bore	Type

Technical data					
Type	25PPE	32PPE	40PPE	50PPE	63PPE
Fluid	Compressed filtered air. Lubrication, if be used, must be continous.				
Pressure range	1,5 ÷ 7 bar				
Temperature range	0 °C ÷ + 80°C				
Max. operation frequency	180 cycle / min.				
Lubrication	Piston : with or without lubrication Levers : lubrication is required on moving parts				
Stroke of open/close (mm)	6	8	8	12	16
Ports	M5				

Materials

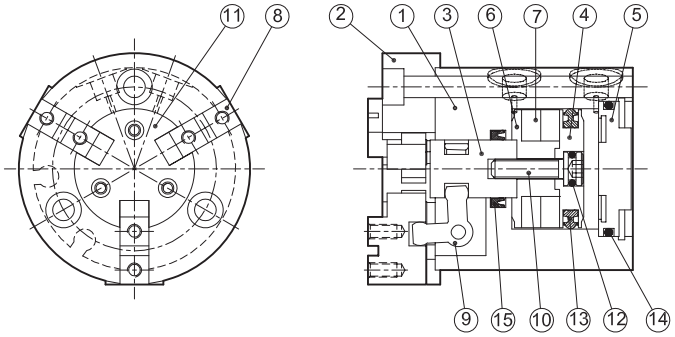

N.	Component	Material
1	Body	Aluminium
2	Front head	Aluminium
3	Piston rod	Steel
4	Piston	Aluminium
5	End cover	Aluminium
6	Magnet holder	Aluminium
7	Magnet	Plastic magnet
8	Fingers	Steel
9	Action lever	Steel
10	Screw	Stainless steel
11	Finger cover	Stainless steel
12	O-ring	NBR
13	Piston seals	NBR
14	End cover O-ring	NBR
15	Piston rod seals	NBR

Gripping forces

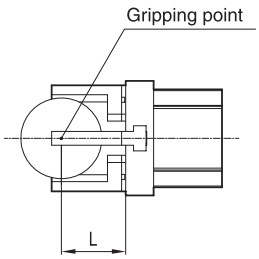

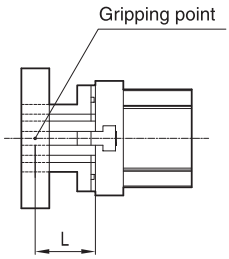

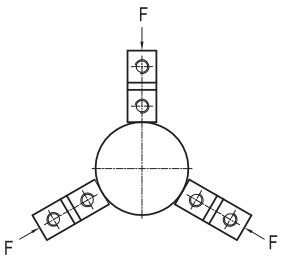

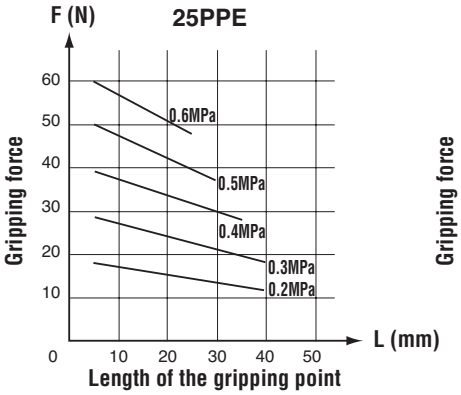

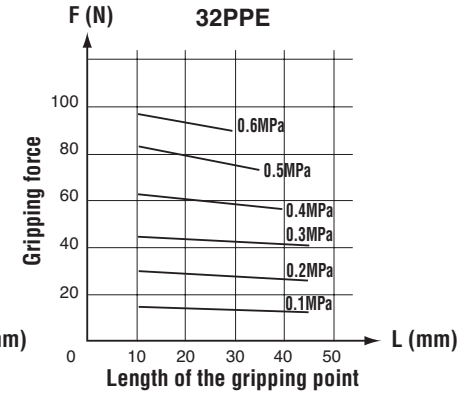

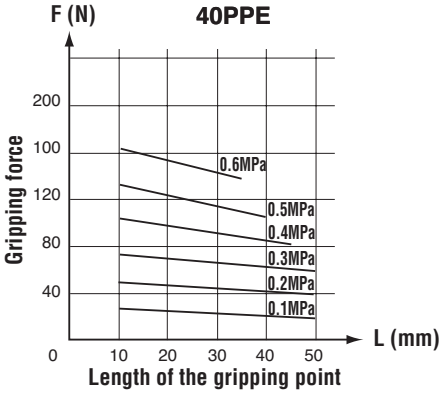

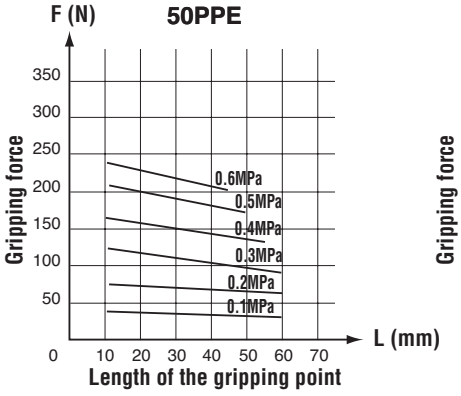

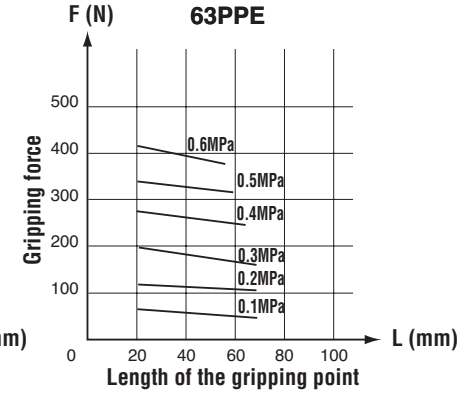

type: **25PPE**

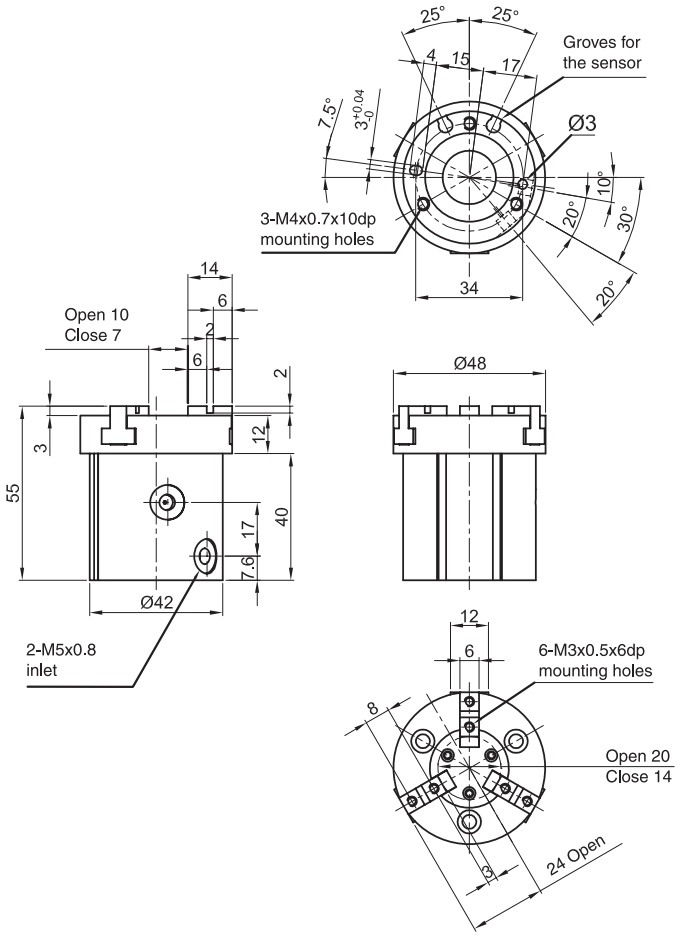

type: **32PPE**

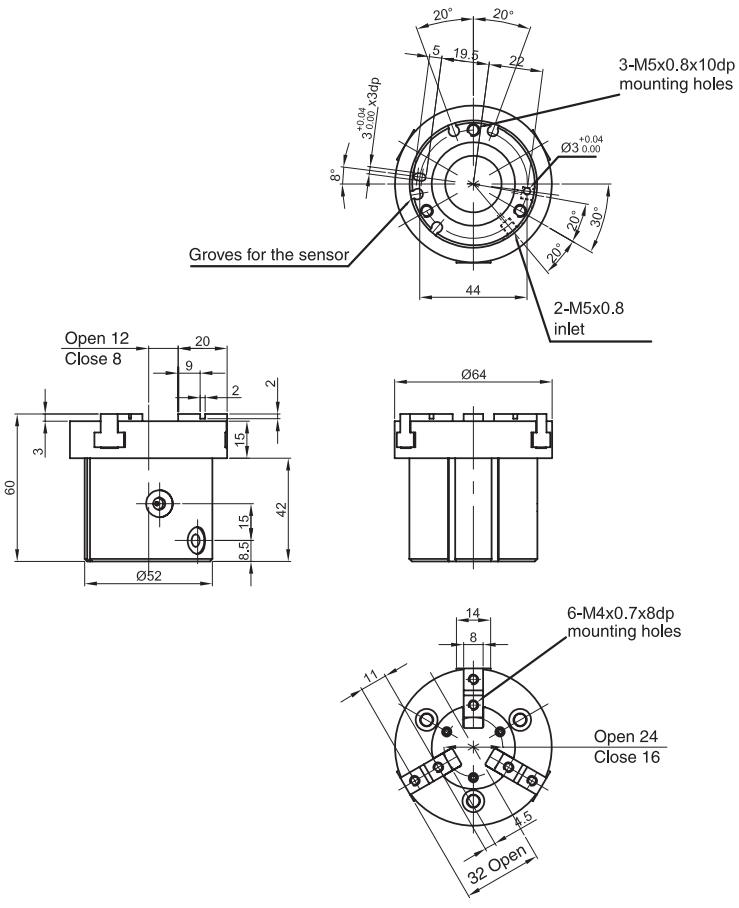

type: **40PPE**

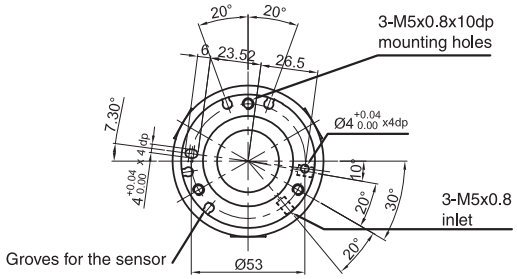

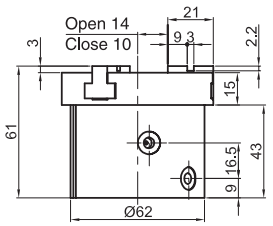

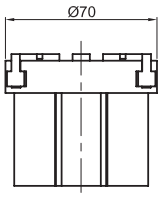

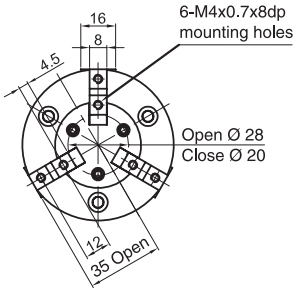

type: **50PPE**

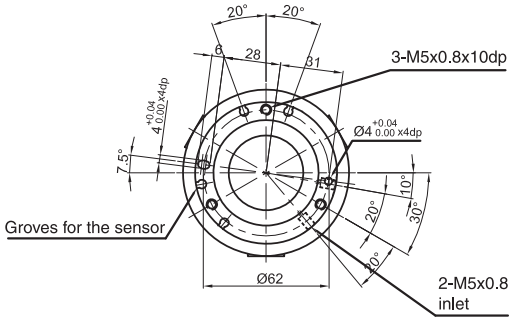

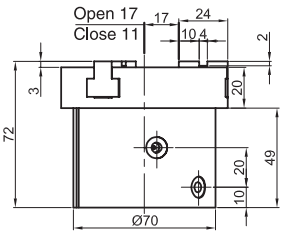

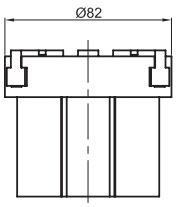

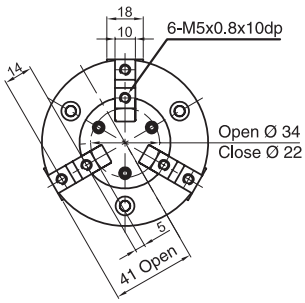

type: **63PPE**

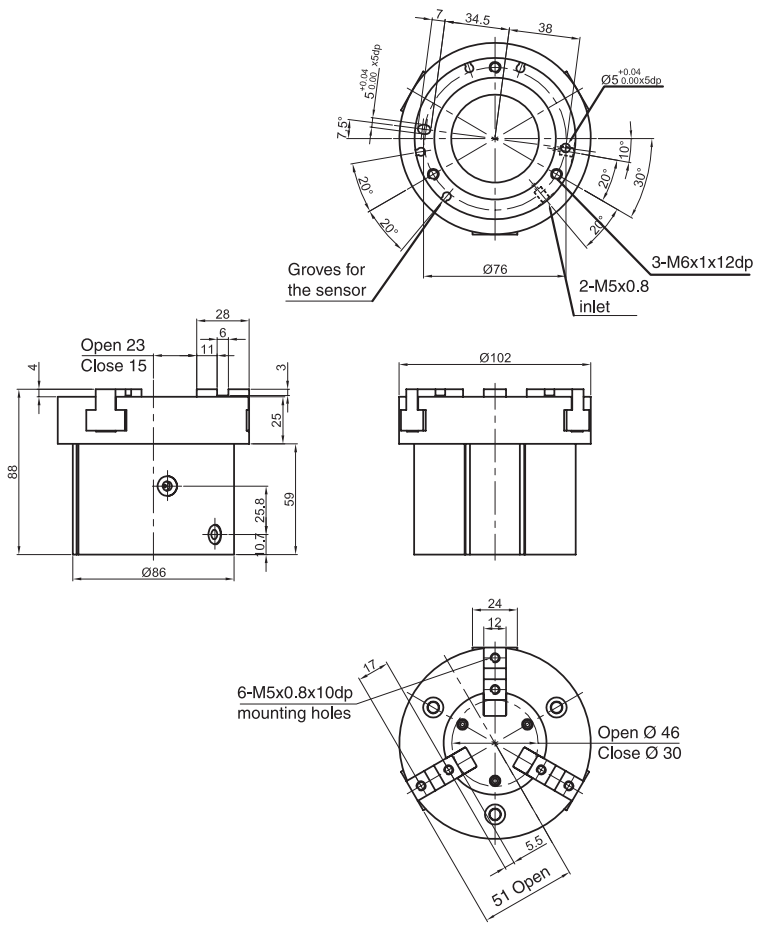
7
34.5
38
Ø5 +0.04 0.00x5dp
5 +0.04 0.00 x5dp
7.5°
10°
20°
30°
20°
20°
20°
Groves for the sensor
Ø76
3-M6x1x12dp
2-M5x0.8 inlet
28
6
11
Open 23
Close 15
4
3
25
88
59
25.8
10.7
Ø86
Ø102
24
12
17
6-M5x0.8x10dp mounting holes
Open Ø 46
Close Ø 30
5.5
51 Open

Executions		
Version	Code	Item
Mounting with male thread for hand grip Ø 16	075058	16PM
Mounting with male thread for hand grip Ø 20	075059	20PM
Mounting with male thread for hand grip Ø 25	075064	25PM
Mounting with male thread for hand grip Ø 32	075065	32PM
Mounting with female thread for hand grip Ø 16	075066	16PF
Mounting with female thread for hand grip Ø 20	075067	20PF
Mounting with female thread for hand grip Ø 25	075068	25PF
Mounting with female thread for hand grip Ø 32	075069	32PF

type: **PM**

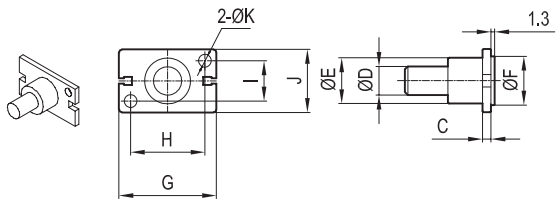

Item	A	B	C	D	E	F	G	H	I	J	K
16PM	15	15	3	10	16	17	34	26	14	22	4,5
20PM	15	15	3	10	18	21	45	35	16	26	5,5
25PM	25	17	5	14	26	26	52	40	20	32	6,5
32PM	25	20	6	16	30	34	60	46	26	40	6,6

type: **PF**

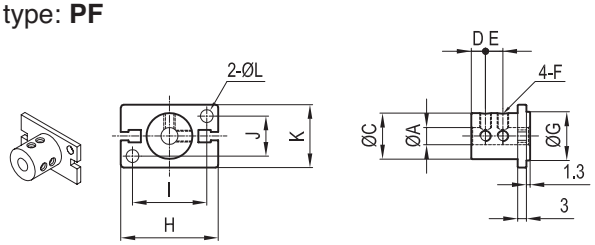

Item	A	B	C	D	E	F	G	H	I	J	K	L
16PF	6	20,5	16	5	6	M4x0,7p	17	34	26	14	22	4,5
20PF	8	25,5	20	7	7	M4x0,7p	21	45	35	16	26	5,5
25PF	10	30,5	25	8	10	M4x0,7p	26	52	40	20	32	6,5
32PF	12	40,5	32	10	15	M4x0,7p	34	60	46	26	40	6,5

Standard executions		
Version	Symbol	Type
Female clevis		FFISO



Clevis conforming to ISO 8140 standards.
They are complete with clips in the standard version (the models M27X2 and M36X2 are normally provided with a pin and 2 seegers).
The clevis is mounted on the cylinder rod and allows a swinging movement.

Options	Suffix
With a pin and 2 seegers (M27 and M36 already standard)	P
Special versions on request	/ S

Technical data	
Material	White zinc plated steel

type: **FFISO**

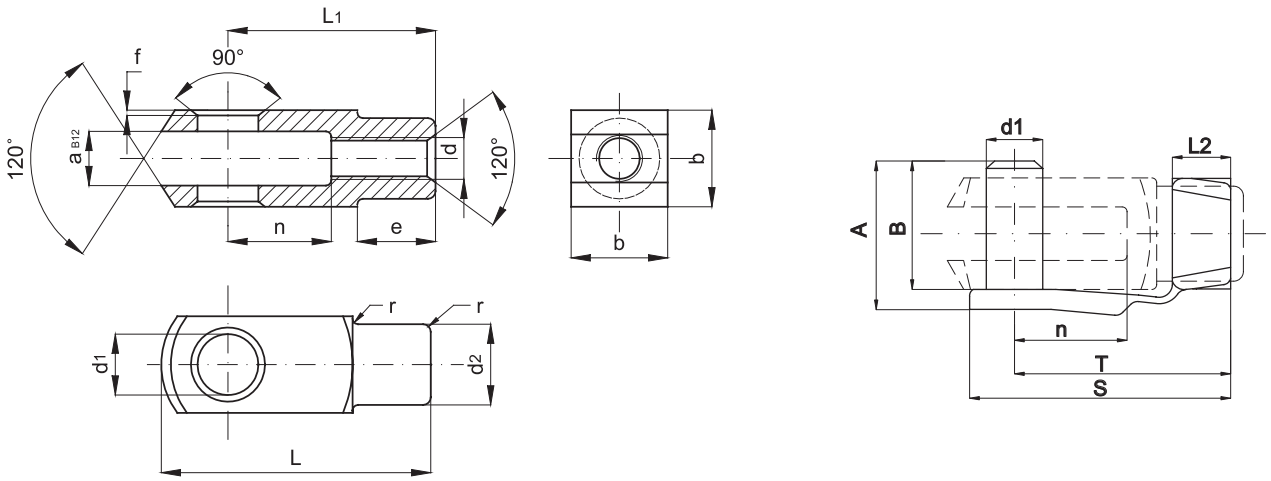

Code	Item	For cylinder ø mm	d	a	A	S	B	b	d_1	T	L_2	d_2	e	f	L	L_1	n	r	Weight (g)
041001	4FFISO	8-10	M4x0,7	4	11	19	9	8	4	15	5	8	6	0,5	21	16	8	0,5	7
041002	6FFISO	12-16	M6x1	6	16	28	14	12	6	23	6	10	9	0,5	31	24	12	0,5	19
041003	8FFISO	20	M8x1,25	8	22	37	19	16	8	31	8	14	12	0,5	42	32	16	0,5	47
041004	10FFISO	25-32	M10x1,25	10	26	46	23	20	10	39	10	18	15	0,5	52	40	20	0,5	89
041005	12FFISO	40	M12x1,25	12	32	55	28	24	12	47	12	20	18	0,5	62	48	24	0,5	153
041006	16FFISO	50-63	M16x1,5	16	40	72	36	32	16	62	14	26	24	1	83	64	32	1	320
041007	20FFISO	80-100	M20x1,5	20	48	88	44	40	20	72	16	34	30	1	105	80	40	1	680
041008	24FFISO	*	M24x2	25	-	-	-	50	25	-	-	42	36	1	132	100	50	1	1330
041009	27FFISO	125	M27x2	30	-	-	-	55	30	-	-	48	38	1	148	110	54	1	1810
041010	36FFISO	160-200	M36x2	35	-	-	-	70	35	-	-	60	40	1	188	144	72	1	3890
041068	42FFISO	250	M42x2	40	104,3	-	-	85	40	-	-	70	63,5	1	232	168	84	5	5300
041069	48FFISO	320	M48x2	50	117,3	-	-	96	50	-	-	82	73	1	265	192	96	5	7900

* For cylinders not conforming to standards.

Standard executions		
Version	Symbol	Type
Female clevis		FFDIN



Clevis conforming to UNI 1676 - DIN 71752 standards.
They are complete with clips in the standard version (the model M24X3 is normally provided with a pin and 2 seegers).
The clevis is mounted on the cylinder rod and allows a swinging movement.

Options	Suffix
Special versions on request	/ S

Technical data	
Material	White zinc plated steel

type: **FFDIN**

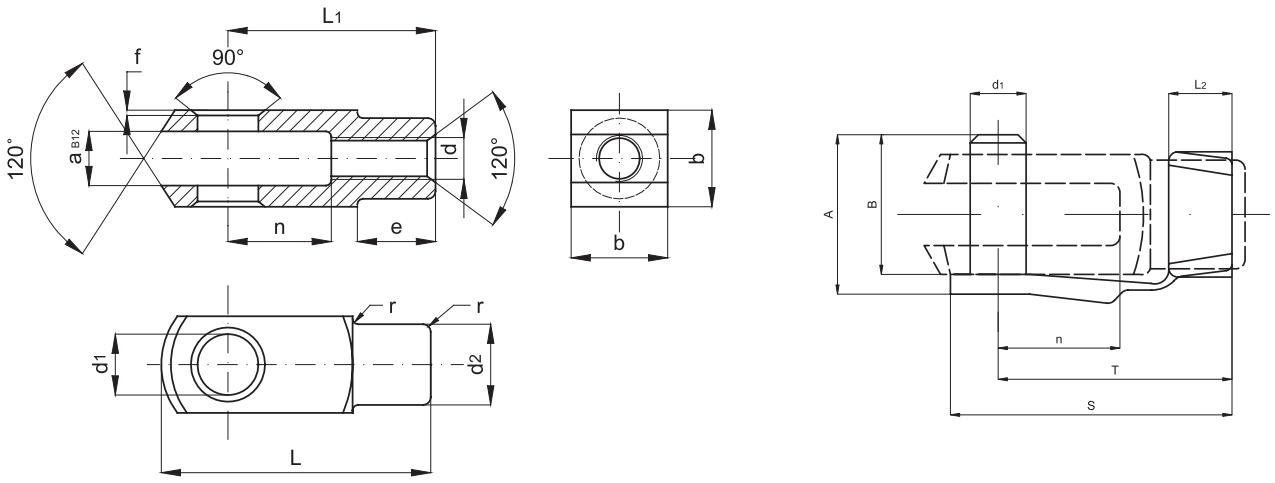

Code	Item	d	a	A	B	b	d_1	S	T	L_2	d_2	e	f	L	L_1	n	r	Weight (g)
041001	4FFDIN	M4x0,7	4	11	9	8	4	19	15	5	8	6	0,5	21	16	8	0,5	7
041022	5FFDIN	M5x0,8	5	13,5	12	10	5	23	19	6	9	7,5	0,5	26	20	10	0,5	12
041002	6FFDIN	M6x1	6	16	14	12	6	28	23	6	10	9	0,5	31	24	12	0,5	19
041003	8FFDIN	M8x1,25	8	22	19	16	8	37	31	8	14	12	0,5	42	32	16	0,5	47
041025	10FFDIN	M10x1,5	10	26	23	20	10	46	39	10	18	15	0,5	52	40	20	0,5	89
041026	12FFDIN	M12x1,75	12	32	28	24	12	55	47	12	20	18	0,5	62	48	24	0,5	153
041027	14FFDIN	M14x2	14	-	-	27	14	-	-	-	24	22,5	1	72	56	28	1	224
041028	16FFDIN	M16x2	16	40	36	32	16	72	62	14	26	24	1	83	64	32	1	320
041030	20FFDIN	M20x2,5	20	48	44	40	20	88	72	16	34	30	1	105	80	40	1	680
041067	24FFDIN	M24x3	25	-	-	50	25	-	-	-	42	36	1	132	100	50	1	1330

Standard executions		
Version	Symbol	Type
Female clevis		FFCN
Male clevis		FMCN

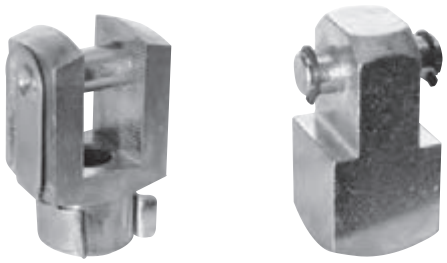

Clevis conforming to CNOMO 06 07 14 standards.
In the standard version the female ones are complete with clips (the model M36X2 is normally provided with a pin and 2 seegers) while the male ones are without pins or clips.
The clevis is mounted on the cylinder rod and allows a swinging movement.

Options	Suffix
Special versions on request	/ S

Technical data	
Material	Yellow zinc plated steel

type: **FFCN**

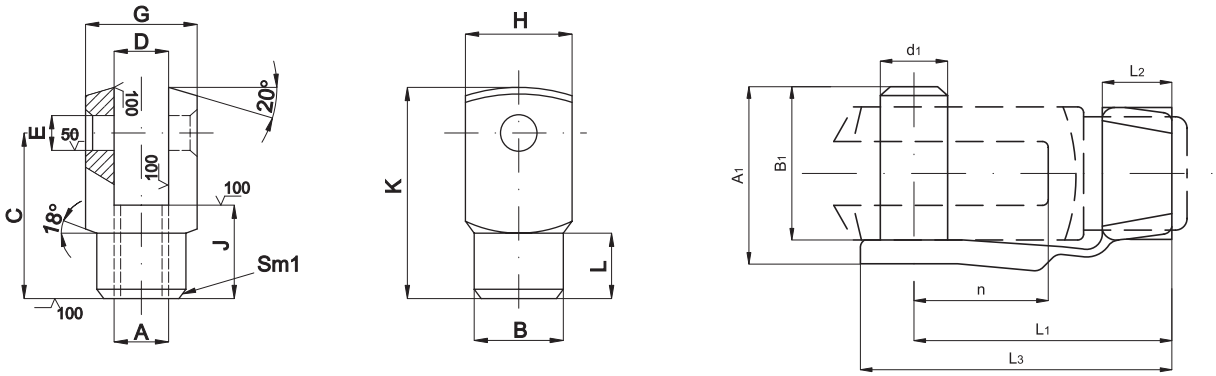

Code	Item	For cylinder ø mm	A	A_1	B	B_1	C	D_{H11}	E_{H8}	G	H	L_1	J	L_2	K	L_3	L	n	Weight (g)
041081	10FFCN	32	M10x1,5	28	18	25	36	11	8	22	22	36	20	10	45	41	14	16	94
041082	16FFCN	40-50	M16x1,5	44	26	40	51	18	12	36	26	50	26	12	64	60	17	25	253
041084	20FFCN	63-80	M20x1,5	53	34	49	63	22	16	45	34	63	30	15	80	74	18,5	33	530
041086	27FFCN	100-125	M27x2	73	42	69	85	30	20	63	42	81	45	19	105	98	30	40	1110
041088	36FFCN	160-200	M36x2	-	50	-	115	40	25	80	50	-	75	-	140	-	45	-	2160

type: **FMCN**

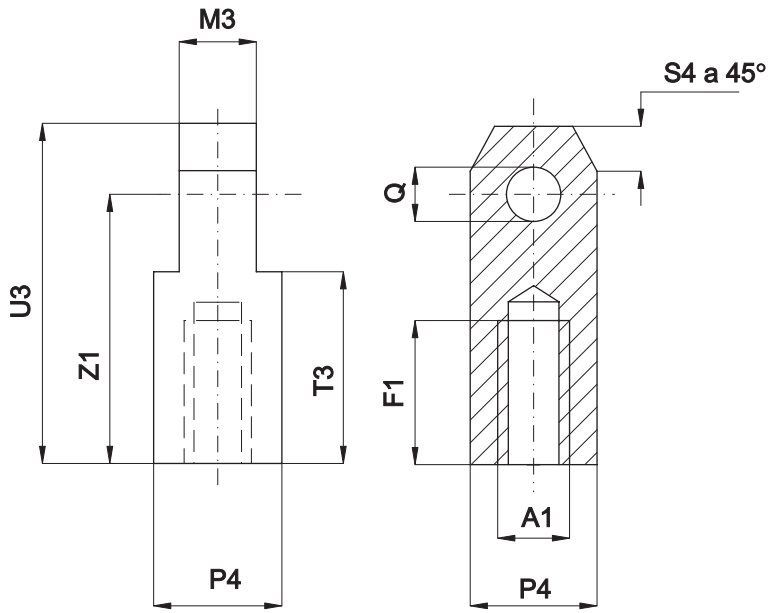

Code	Item	For cylinder ø mm	A_1	F_1	M_3	P_4	Q_{h8}	S_4	T_3	U_3	Z_1
041041	10FMCN	32	M10x1,5	20	11	22	8	6	25	45	36
041042	16FMCN	40-50	M16x1,5	30	18	32	12	10	34	64	51
041044	20FMCN	63-80	M20x1,5	36	22	36	16	12	41	80	63
041046	27FMCN	100-125	M27x2	50	30	45	20	17,5	58	105	85
041048	36FMCN	160-200	M36x2	70	40	63	25	20	81	140	115

Standard executions		
Version	Symbol	Type
Female clevis with male thread		FE



Female clevis with male thread, complete with a pin and 2 seegers in the standard version.
The clevis is mounted on the cylinder rod and allows a swinging movement.

Options	Suffix
Special versions on request	/ S

Technical data	
Material	Yellow zinc plated steel

type: **FE**

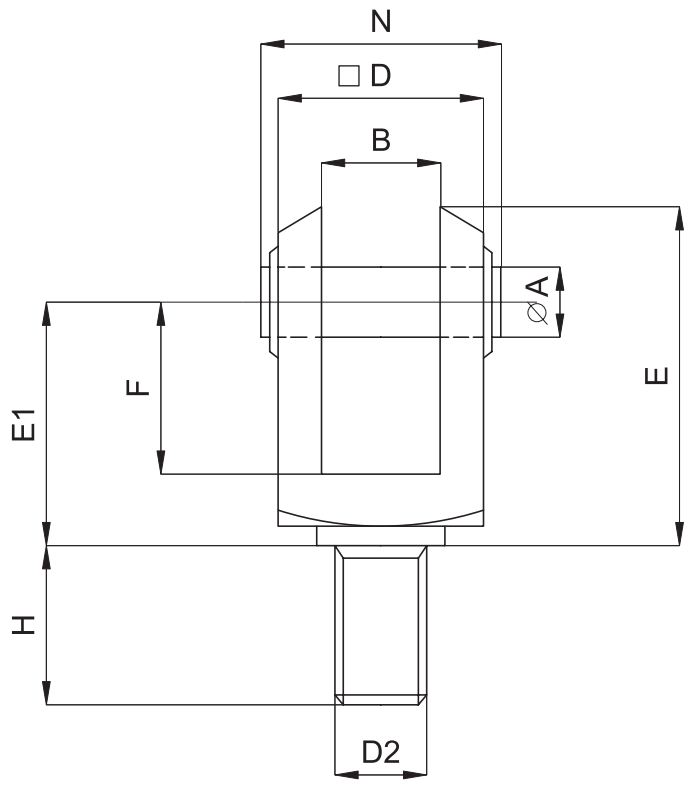

Code	Item	A ø	B	D	D_2	E	E_1	F	H	N
041061	10FE	10	10	20	M10x1,25	39	27	20	22	27
041062	12FE	12	12	24	M12x1,25	46	32	24	24	31
041063	16FE	16	16	32	M16x1,5	61	42	32	32	39
041064	20FE	20	20	40	M20x1,5	77	52	40	40	49
041065	27FE	25	25	50	M27x2	98	66	50	43	59
041066	33FE	28	28	55	M33x2	110	74	56	56	64

Notes

GENERAL INDEX CILINDERS INDEX

Standard executions		
Version	Symbol	Type
With female thread		RF..SE



Options	Suffix
With male thread	RM..SE
With female thread (big pitch)	G
With left thread	S

The options can be combined (when this is possible)

Self-lubricating bearing heads servicing-free and conforming to DIN 648-K and ISO 8139 standards.
The bearing head is mounted on the cylinder rod.

Technical data		
Temperature range	-30 °C ÷ +150 °C	
Materials	Body:	Zinc / nickel plated steel
	Sphere:	Hardened ground polished steel
	External ring:	Self-lubricating brass/ PTFE

type: **RF..SE**

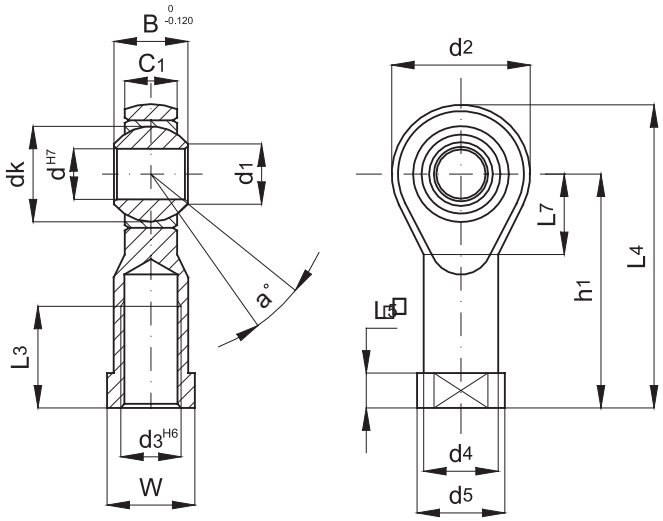

Code	Item	For cylin. ISO ø mm	d	d3	B	C1	d1	d2	d4	d5	dk	h1	L3	L4	L5	L7	W	Static load (daN)	a°	Weight (g)
041551	RF4SE	8-10	5	M4	8	6	7,7	18	9	11	11,112	27	10	36	4	10	9	600	13	19
041552	RF6SE	12-16	6	M6	9	6,75	8,9	20	10	13	12,700	30	12	40	5	11	11	700	13	26
041553	RF8SE	20	8	M8	12	9	10,4	24	12,50	16	15,875	36	16	48	5	13	14	1200	14	46
041554	RF10SE	25-32	10	M10x1,25	14	10,50	12,9	28	15	19	19,050	43	20	57	6,5	15	17	1400	13	75
041555	RF12SE	40	12	M12x1,25	16	12	15,4	32	17,50	22	22,225	50	22	66	6,5	17	19	1900	13	112
041557	RF16SE	50-63	16	M16x1,5	21	15	19,3	42	22	27	28,575	64	28	85	8	23	22	4800	15	220
041559	RF20SE	80-100	20	M20x1,5	25	18	24,3	50	27,50	34	34,925	77	33	102	10	27	30	5200	14	406
041562	RF30SE	125	30	M27x2	37	25	34,8	70	40	50	50,800	110	51	145	15	36	41	10800	17	1120
041563	RF35SE	160-200	35	M36x2	43	28	37,7	80	46	58	57,150	125	56	165	17	41	50	12400	19	1595
041571	RF40FE	250	40	M42x2	49	33	45,2	91	53	65	66,670	142	60	187,5	19	45	55		17	
041572	RF50SE	320	50	M48x2	60	45	56,6	117	65	75	82,500	160	65	218,5	23	58	65		12	

Mounting Accessories for Cylinders

Bearings - Self-aligned articulated couplings

Standard executions		
Version	Symbol	Type
Axial		GB



Axial self-aligned articulated couplings mounted on the cylinder rod.
They are fit for applications with high tractions and allow to compensate the angular and parallel misalignments.
They are provided with hexagonal nut in the standard version.

Options	Suffix
Special versions on request	/ S

Technical data	
Material	Zinc plated steel

type: **GB**

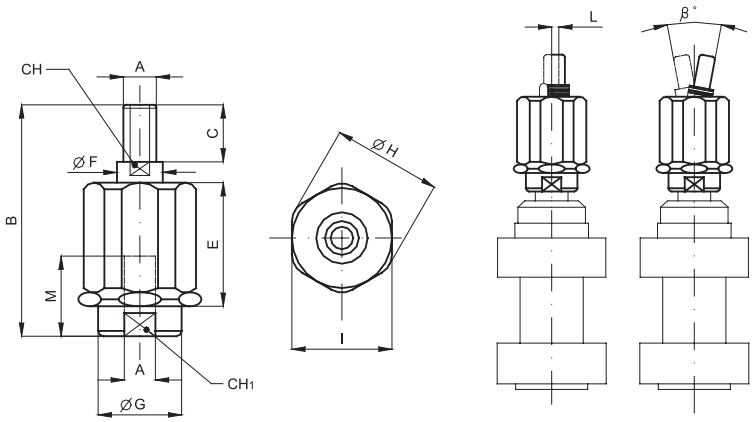

Code	Item	For cylin. ISO ø mm	A	B	C	D	E	F	G	H	I	L	M	CH	β°	CH1	Maximum load (N) in thrust and traction	Weight (g)
041701	GB008	8-10	M4x0,7	35	10	3,5	17,5	6	8,5	14,5	13	1	10	5	10	7	750	15
041700	GB005	*	M5x0,8	35	10	3,5	17,5	6	8,5	14,5	13	1	10	5	10	7	1200	20
041702	GB010	12-16	M6x1	35	10	3,5	17,5	6	8,5	14,5	13	1	10	5	10	7	1200	23
041703	GB020	20	M8x1,25	57	20	4	28,5	8	12,5	19	17	2	20	7	10	11	2500	60
041704	GB040	25-32	M10x1,25	71	20	5	35	14	22	32	30	2	20	12	10	19	5000	220
041705	GB050	*	M10x1,5	71	20	5	35	14	22	32	30	2	20	12	10	19	5000	220
041706	GB060	40	M12x1,25	75	24	5	35	14	22	32	30	2	20	12	10	19	5000	230
041707	GB090	*	M12x1,75	75	24	5	35	14	22	32	30	2	20	12	10	19	5000	230
041708	GB100	50-63	M16x1,5	103	32	8	54	22	32	45	41	2	32	20	10	30	10000	660
041709	GB120	80-100	M20x1,5	119	40	8	54	22	32	45	41	2	40	20	10	30	10000	700
041711	GB130	125	M27x2	147	54	-	60	-	57	70	-	-	40	24	-	54	-	1700

* For cylinders not conforming to standards.

GENERAL INDEX
CILINDERS INDEX

Standard executions		
Version	Symbol	Type
Axial		RBI



Axial articulated couplings with bearing.
They are mounted on the cylinder rod and allow to compensate the angular misalignments.

Technical data	
Temperature range	-20 °C ÷ +80 °C
Materials	Body: Special zinc alloy Pin: Zinc plated steel Seal: Neoprene Pre-lubricated spherical coupling

Options	Suffix
Special versions on request	/ S

type: **RBI**

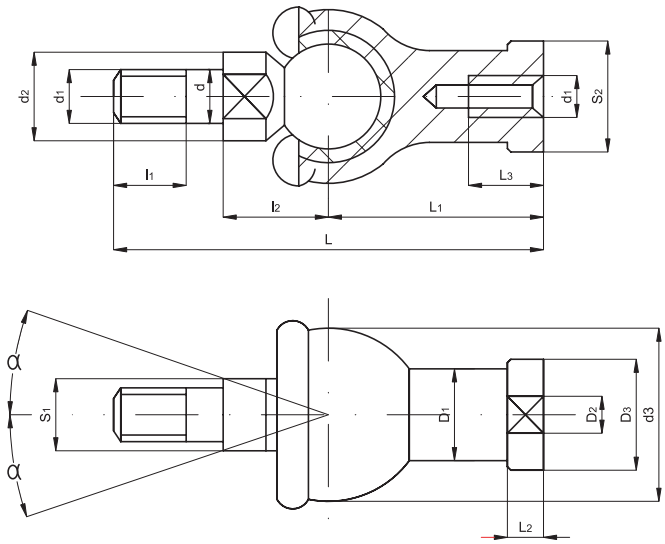

Code	Item	For cylin. ø mm	d	d1	d2 min	d3 max	l1 min	l2	S1	L max	L1	L2 max	L3 min	D1 max	D2 max	D3 max	S2	Load (KN) Dynam.	Load (KN) Static	α	Weight (g)
041601	RBI5	*	5	M5x0,8	9	20	8	11	7	46	24	4	12	9	12	17	10	1,7	5,7	15	25
041602	RBI6	12-16	6	M6x1	10	20	11	12,2	8	55,2	28	5	15	10	13	20	10	2,2	7,5	15	40
041603	RBI8	20	8	M8x1,25	12	24	12	16	10	65	32	5	16	12,5	16	24	13	3,3	11	15	75
041604	RBI10	25-32	10	M10x1,25	14	30	15	19,5	11	74,5	35	6,5	18	15	19	28	16	4,8	16	15	121
041605	RBI12	40	12	M12x1,25	19	32	17	21	16	84	40	6,5	20	17,5	22	32	18	6,6	22	15	187
041606	RBI14	*	14	M14x1,5	19	38	22	23,5	16	104,5	45	8	25	20	25	36	21	8,7	29	11	277
041607	RBI16	50-63	16	M16x1,5	22	44	23	25,5	18	112	50	8	27	22	27	40	24	10	33	11	361
041608	RBI18	*	18	M18x1,5	25	45	25	31	21	130,5	58	10	32	25	31	45	27	11	37	11	539
041609	RBI20	80-100	20	M20x1,5	29	50	25	31	24	133	63	10	38	27,5	34	45	30	11	37	7,5	575
041610	RBI22	*	22	M22x1,5	29	52	26	33	24	145	70	12	43	30	37	50	30	14	46	7,5	757

* For cylinders not conforming to standards.

Mounting Accessories for Cylinders

Bearings - Angle articulated couplings

Standard executions		
Version	Symbol	Type
Angular		RBL



Articulated couplings with bearing and with pin perpendicular to the body.
They are mounted on the cylinder rod and allow to compensate the angular misalignment.

Technical data	
Temperature range	-20 °C ÷ +80 °C
Materials	Body: Special zinc alloy Pin: Zinc plated steel Seal: Neoprene Pre-lubricated spherical coupling

Options	Suffix
Special versions on request	/ S

type: **RBL**

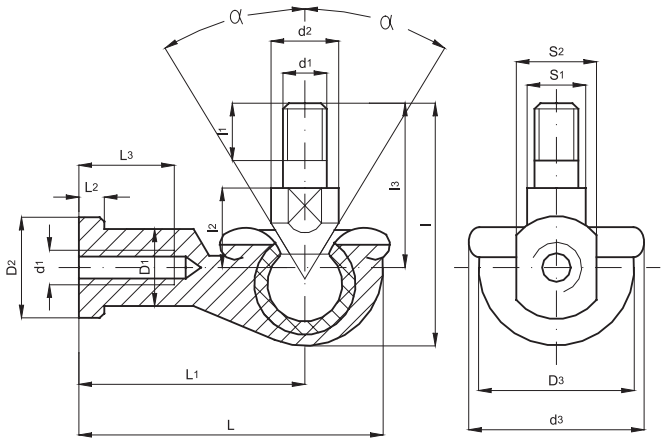

Code	Item	For cylin. ø mm	d	d_1	d_2 min	d_3 max	l max	l_1 min	l_2	l_3 max	S_1	L max	L_1	L_2 max	L_3 min	D_1 max	D_2 max	D_3 max	S_2	Load (KN) Dyn.	Load (KN) Stat.	α	Weight (g)
041651	RBL5	*	5	M5x0,8	9	20	30	8	10	21	7	36	27	4	14	9	12	18	10	2,7	9,2	25	26
041652	RBL6	12-16	6	M6x1	10	20	36	11	11	26	8	40,5	30	5	14	10	13	20	10	3,6	12	25	39
041653	RBL8	20	8	M8x1,25	12	24	43,5	12	14	31	10	49	36	5	17	12,5	16	25	13	5,7	19	25	68
041654	RBL10	25-32	10	M10x1,25	14	30	51,5	15	17	37	11	58	43	6,5	24	15	19	29	16	8,2	27	25	112
041655	RBL12	40	12	M12x1,25	19	32	57,5	17	19	42	16	66	50	6,5	25	17,5	22	31	18	11	37	25	164
041656	RBL14	*	14	M14x1,5	19	38	73,5	22	21,5	56	16	75	57	8	26	20	25	35	21	14	48	25	254
041657	RBL16	50-63	16	M16x1,5	22	44	79,5	23	23,5	60	18	84	64	8	32	22	27	39	24	16	53	20	336
041658	RBL18	*	18	M18x1,5	25	45	90	25	26,5	68	21	93	71	10	34	25	31	44	27	18	61	20	464
041659	RBL20	80-100	20	M20x1,5	29	50	90	25	27	68	24	99	77	10	35	27,5	34	44	30	18	61	20	538
041660	RBL22	*	22	M22x1,5	29	52	95	26	28	70	24	109	84	12	41	30	37	50	30	22	75	16	713

* For cylinders not conforming to standards.

GENERAL INDEX CILINDERS INDEX

Standard executions		
Version	Symbol	Type
Rear clevis with pin		CF
Foot		P
Flange		F



Technical data	
Material	Fe 37, tranciato
Treatment	Black cataphoresis

type: **CF**

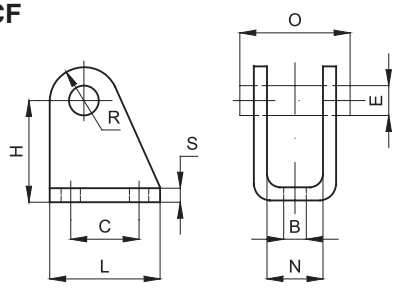

Rear clevis

Code	Item	For cyl. ø mm	B	E	C	H	L	N	O	R	S	Weight (g)
040041	CF8-10	8-10	4,5	4	12,5	24	20	8,1	17	5	2,5	20
040042	CF12-16	12-16	5,5	6	15	27	25	12,1	23	7	3	36
040043	CF20-25	20-25	6,6	8	20	30	32	16,1	29,5	10	4	78

Complete with a pin and 2 seegers in the standard version.

type: **P**

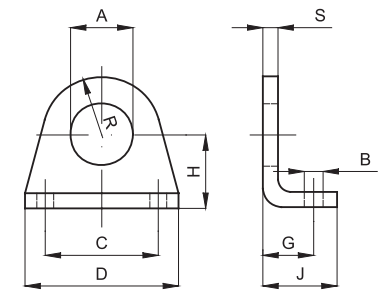

Foot

Code	Item	For cyl. ø mm	A	B	C	D	G	H	J	R	S	Weight (g)
040021	P8-10	8-10	12	4,5	25	35	11	16	16	10	3	20
040022	P12-16	12-16	16	5,5	32	42	14	20	20	12,5	4	40
040023	P20-25	20-25	22	6,6	40	54	17	25	25	20	5	90

type: **F**

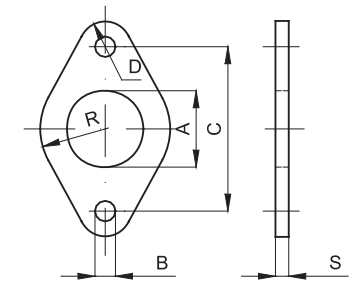

Flange

Code	Item	For cyl. ø mm	A	B	C	R	D	S	Weight (g)
040001	F8-10	8-10	12	4,5	30	11	5	3	12
040002	F12-16	12-16	16	5,5	40	15	6	4	26
040003	F20-25	20-25	22	6,6	50	20	8	5	50

Mounting Accessories for Cylinders

Mountings for DIN ISO 6431 and VDMA 24 562 in aluminium

Standard executions		
Version	Symbol	Type
Rear clevis		CF..ALIS
Rear eye		CM..ALIS
Narrow rear clevis		CFS..ALIS
Rear 90° hinge CETOPRP107P		ASV..ALIS
High foot		P..ALIS
Narrow rear eye with bearing DIN 648K		CMS..ALIS
Rear 90° hinge ISO 6431		AS..ALIS



Technical data	
Material	Die-cast aluminium
Treatment	Sifting

Note: The mounting screws are to be ordered separately.
For screws see page 1.101.1 (VBCI - VBVI).

type: **CF**

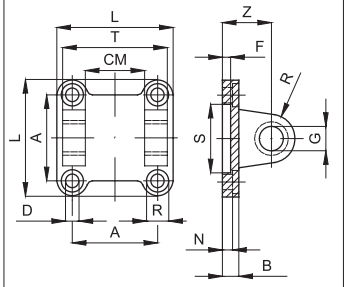

Rear clevis MP2

Code	Item	For cyl. ø mm	A	L	D	R	N	B	S	F	Z	G	M	CM	T	Weight (g)
040441	CF32ALIS	32	32,5	45	6,6	11	5,5	9	30	5	22	10	10	26	45	48
040442	CF40ALIS	40	38	52	6,6	11	5,5	9	35	5	25	12	12	28	52	75
040443	CF50ALIS	50	46,5	65	9	15	6,5	11	40	5	27	12	12	32	60	124
040444	CF63ALIS	63	56,5	75	9	15	6,5	11	45	5	32	16	16	40	70	192
040445	CF80ALIS	80	72	95	11	18	10	14	45	5	36	16	16	50	90	380
040446	CF100ALIS	100	89	115	11	18	10	14	55	5	41	20	20	60	110	620
040447	CF125ALIS	125	110	140	14	20	10	20	60	7	50	25	25	70	130	1180
040448	CF160ALIS	160	140	180	18	26	10	20	65	7	55	30	25	90	170	1780
040449	CF200ALIS	200	175	220	18	26	11	25	75	7	60	30	25	90	170	2900
040450	CF250ALIS	250	220	270	22	-	-	25	90	-	70	40	40	110	200	5800

The pin is to be ordered separately: for the pin see page 1.98.2 (SEC..AQIS)

type: **CM**

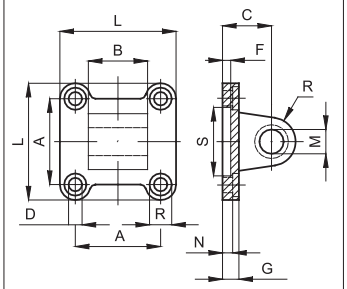

Rear eye MP4

Code	Item	For cyl. ø mm	A	L	D	R	N	G	S	F	C	M	T	B		Weight (g)
040501	CM32ALIS	32	32,5	45	6,6	11	5,5	9	30	5	22	10	10	26		54
040502	CM40ALIS	40	38	52	6,6	11	5,5	9	35	5	25	12	12	28		76
040503	CM50ALIS	50	46,5	65	9	15	6,5	11	40	5	27	12	12	32	-0,2	124
040504	CM63ALIS	63	56,5	75	9	15	6,5	11	45	5	32	16	16	40	-0,6	212
040505	CM80ALIS	80	72	95	11	18	10	14	45	5	36	16	16	50		420
040506	CM100ALIS	100	89	115	11	18	10	14	55	5	41	20	20	60		666
040507	CM125ALIS	125	110	140	14	20	10	20	60	7	50	25	25	70		1264
040508	CM160ALIS	160	140	180	18	26	10	20	65	7	55	30	25	90	-0,5	1846
040509	CM200ALIS	200	175	220	18	26	11	25	75	7	60	30	25	90	-1,2	2950
040510	CM250ALIS	250	220	270	22	-	-	25	90	11	70	40	40	110		6200

type: **CFS**

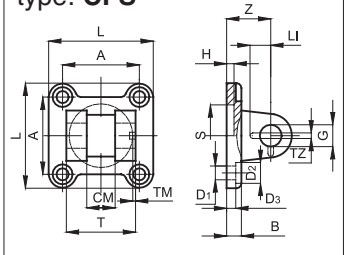

Narrow rear clevis for rear male trunnion with bearing DIN 648K

Codice	Articolo	Per cil. ø mm	L	T	CM	A	Z	H	B	D_3	S	Q	MR	D_1	D_2	TA	TZ	LI	F	Peso (g)
040451	CFS32ALIS	32	45	34	14	32,5	22	5	9	5,5	30	10	10	6,6	11	3	3,3	11,5	17	42
040452	CFS40ALIS	40	52	40	16	38	25	5	9	5,5	35	12	12	6,6	11	4	4,3	12	20	70
040453	CFS50ALIS	50	65	45	21	46,5	27	5	11	6,5	40	16	14	9	15	4	4,3	14	22	112
040454	CFS63ALIS	63	75	51	21	56,5	32	5	11	6,5	45	16	18	9	15	4	4,3	14	25	194
040455	CFS80ALIS	80	95	65	25	72	36	5	14	10	45	20	20	11	18	4	4,3	16	30	382
040456	CFS100ALIS	100	115	75	25	89	41	5	14	10	55	20	22	11	18	4	6,3	16	32	610
040457	CFS125ALIS	125	140	97	37	110	50	7	20	10	60	30	25	14	20	6	6,3	24	42	1100
040458	CFS160ALIS	160	180	122	43	140	55	7	20	10	65	35	30	18	26	6	6,3	26,5	46	2030
040459	CFS200ALIS	200	220	122	43	175	60	7	25	11	75	35	30	18	26	6	6,3	26,5	49	3400

The pin is to be ordered separately: for the pin see page 1.98.3 (SEC..ARAQIS).

GENERAL INDEX CILINDERS INDEX

type: **ASV**

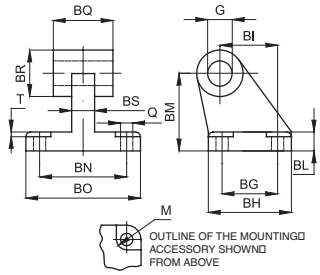

Rear 90° hinge
CETOP RP 107P

Code	Item	For cyl. ø mm	Q	M	BG	BH	BI	BL	BM	BN	BO	BS	BR	G	T	BQ		Weight (g)
040388	ASV32ALIS	32	6,6	11	18	31	21	8	32	38	51	10	20	10	1,6	26		56
040389	ASV40ALIS	40	6,6	11	22	35	24	10	36	41	54	15	22	12	1,6	28		139
040390	ASV50ALIS	50	9	15	30	45	33	12	45	50	65	16	26	12	1,6	32	-0,2	142
040391	ASV63ALIS	63	9	15	35	50	37	14	50	52	67	16	30	16	1,6	40	-0,6	200
040392	ASV80ALIS	80	11	18	40	60	47	14	63	66	86	20	30	16	2,5	50		312
040393	ASV100ALIS	100	11	18	50	70	55	17	71	76	96	20	38	20	2,5	60		656
040394	ASV125ALIS	125	14	20	60	90	70	20	90	94	124	30	45	25	3,2	70		826
040395	ASV160ALIS	160	14	20	88	126	97	25	115	118	156	36	63	30	4	90	-0,5 -1,2	-
040396	ASV200ALIS	200	18	26	90	130	105	30	135	122	162	40	63	30	4	90		-

type: **P**

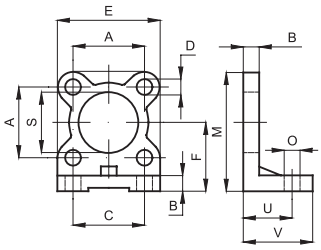

High foot

It is supplied singly.

Code	Item	For cyl. ø mm	A	B	C	D	E	F	M	O	S	U	V	Weight (g)
040141	P32ALIS	32	32,5	8	32	7	45	32	54,5	7	30	24	35	46
040142	P40ALIS	40	38	8	36	7	52	36	62	9	35	28	35	66
040143	P50ALIS	50	46,5	10	45	9	65	45	77,5	9	40	32	45	138
040144	P63ALIS	63	56,5	10	50	9	75	50	87,5	9	45	32	45	174
040145	P80ALIS	80	72	12	63	11	95	63	110,5	12	45	41	55	356
040146	P100ALIS	100	89	12	75	11	115	71	128	14	56	41	56	468
040147	P125ALIS	125	110	16	90	14	140	91	161	16	60	45	68	920
040148	P160ALIS	160	140	20	115	18	180	115	205	18	65	60	82	2300
040149	P200ALIS	200	175	20	135	18	220	135	245	22	75	70	90	3200

type: **CMS**

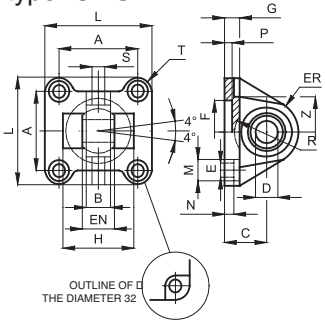

Narrow rear eye with
bearing DIN 648 K

Code	Item	For cyl. ø mm	A	B	C	D	EN	ER	F	G	E	L	M	N	P	H	R	S	Z	T	Weght (g)
040151	CMS32ALIS	32	32,5	10,5	22	10	14	16	30	9	6,6	45	11	5,5	5	-	-	4	32,5	6,25	62
040152	CMS40ALIS	40	38	12	25	12	16	19	35	9	6,6	52	11	5,5	5	-	-	6	39	7	100
040153	CMS50ALIS	50	46,5	15	27	16	21	21	40	11	9	65	15	6,5	5	51	18	8	47	9,25	180
040154	CMS63ALIS	63	56,5	15	32	16	21	24	45	11	9	75	15	6,5	5	-	-	8	52	9,25	244
040155	CMS80ALIS	80	72	18	36	20	25	28,5	45	14	11	95	18	10	5	72	24	10	67	11,5	476
040156	CMS100ALIS	100	89	18	41	20	25	30	55	14	11	115	18	10	5	-	-	10	77	13	646
040157	CMS125ALIS	125	110	25	50	30	37	40	60	20	13,5	140	20	10	7	-	-	13	98	15	1410
040158	CMS160ALIS	160	140	28	55	35	43	45	65	20	18	180	26	10	7	-	-	14	130	20	2420
040159	CMS200ALIS	200	175	28	60	35	43	48	75	25	18	220	26	11	7	-	-	14	155	22,5	3840

type: **AS**

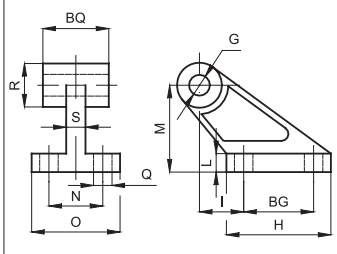

Rear 90° hinge

Code	Item	For cyl. ø mm	Q	BG	H	I	L	M	N	O	S	R	BQ	G	Weight (g)
040361	AS32ALIS	32	7	20	37	18	8	32	25	41	9	19	26	10	54
040362	AS40ALIS	40	9	32	54	25	10	45	32	52	14	25,5	28	12	136
040363	AS50ALIS	50	9	32	54	25	10	45	32	52	14	25,5	32	12	140
040364	AS63ALIS	63	11	50	75	32	12	63	40	63	14	32	40	16	295
040365	AS80ALIS	80	11	50	75	32	12	63	40	63	14	32	50	16	313
040366	AS100ALIS	100	14	70	103	40	17	90	50	80	22	42	60	20	710
040367	AS125ALIS	125	14	70	103	40	17	90	50	80	22	46	70	25	820
040368	AS160ALIS	160	18	110	154	50	20	140	63	110	26	53,5	89	30	1974
040369	AS200ALIS	200	18	110	154	50	20	140	63	110	26	53,5	89	30	1974

Mounting Accessories for Cylinders

Mountings for DIN ISO 6431 and VDMA 24 562 in steel

Standard executions		
Version	Sym.	Type
Rear clevis		CF..AQIS
Rear eye		CM..AQIS
Rear 90° hinge CETOP RP 107P		ASV..AQIS
Pin with rear clevis MP2 with seeger		SEC..AQIS
Narrow rear clevis		CFS..AQIS
Narrow rear eye with bearing DIN 648K		CMS..AQIS
Rear 90° hinge with bearing DIN 648K		ASS..AQIS
Anti-rotating pin for narrow rear clevis		SEC..ARAQIS
Flange ISO 6431		FL..AQIS
Flange VDMA		FLV..AQIS
Low foot		PB..AQIS
Round adjustable centre trunnion (tie rod)		CT..AQIS
Centre trunnion (profile barrel)		CTS..AQIS
Support for centre trunnion (tie rod)		ST..AQIS
Front clevis		CFA..AQIS
Centre trunnion (tie rod) for heads		CTA..AQIS

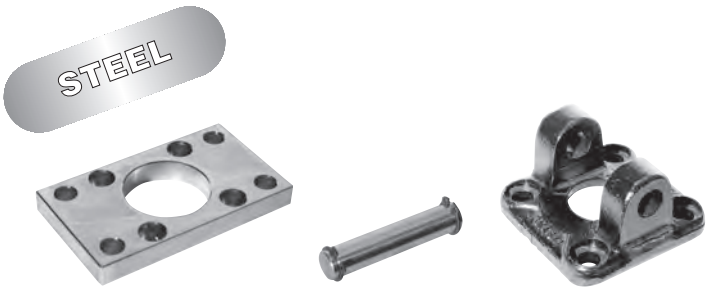

Technical data					
Type	Materials and treatments				
	Steel A105	Steel AVP	Fe 37	Black cataphoresis	White zinking
CF..AQIS	•			•	
CM..AQIS	•			•	
ASV..AQIS	•			•	
SEC.AQIS		•			
CFS..AQIS	•			•	
CMS..AQIS	•			•	
ASS..AQIS	•			•	
SEC..ARAQIS		•			
FL..AQIS			•		•
FLV..AQIS			•		•
PB..AQIS			•		•
CT..AQIS	•				•
CTS..AQIS	•				•
ST..AQIS			•		•
CFA..AQIS	•			•	
CTA..AQIS	•				•

Note: The mounting screws are to be ordered separately.
For screws see page 1.101.1 (VBCI - VBVI - VBTR)

type: **CF**

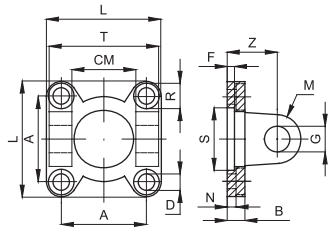

Rear clevis MP2

Code	Item	For cyl. ø mm	A	L	D	R	N	B	S	F	Z	G	M	CM	T	Weight (g)
040461	CF32AQIS	32	32,5	45	6,6	11	5,5	10	30	5	22	10	10	26	45	138
040462	CF40AQIS	40	38	55	6,6	11	5,5	10	35	5	25	12	12	28	52	230
040463	CF50AQIS	50	46,5	65	9	15	6,5	10	40	5	27	12	12	32	60	338
040464	CF63AQIS	63	56,5	75	9	15	6,5	12	45	5	32	16	16	40	70	540
040465	CF80AQIS	80	72	95	11	18	10	14	45	-	36	16	16	50	90	1000
040466	CF100AQIS	100	89	115	11	18	10	16	55	-	41	20	20	60	110	1700
040467	CF125AQIS	125	110	140	13,5	20	10	20	60	-	50	25	25	70	130	3350
040468	CF160AQIS	160	140	180	18	26	10	20	65	7	55	30	25	90	170	5750
040469	CF200AQIS	200	175	220	18	26	11	20	75	7	60	30	25	90	170	8900

The pin is to be ordered separately: for the pin see page 1.98.2 (SEC..AQIS)

type: **CM**

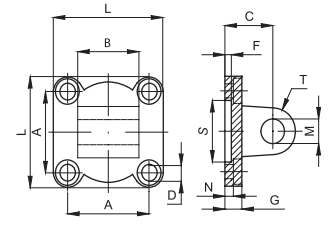

Rear eye MP4

Code	Item	For cyl. ø mm	A	L	D	R	N	G	S	F	C	M	T	B		Weight (g)
040521	CM32AQIS	32	32,5	45	6,6	11	5,5	10	30	5	22	10	10	26		176
040522	CM40AQIS	40	38	55	6,6	11	5,5	10	35	5	25	12	12	28		274
040523	CM50AQIS	50	46,5	65	9	15	6,5	10	40	5	27	12	12	32	-0,2 -0,6	368
040524	CM63AQIS	63	56,5	75	9	15	6,5	12	45	5	32	16	16	40		682
040525	CM80AQIS	80	72	95	11	18	10	14	45	5	36	16	16	50		1196
040526	CM100AQIS	100	89	115	11	18	10	16	55	5	41	20	20	60		2100
040527	CM125AQIS	125	110	140	13,5	20	10	20	60	7	50	25	25	70	-0,5 -1,2	3740
040528	CM160AQIS	160	140	180	18	26	10	20	65	7	55	30	25	90		5890
040529	CM200AQIS	200	175	220	18	26	11	20	75	7	60	30	25	90		8470

GENERAL INDEX CILINDERS INDEX

type: **ASV**

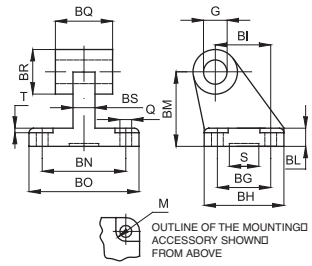

Rear 90° hinge
CETOP RP 107P

Code	Item	For cyl. ø mm	Q	M	BG	BH	BI	BL	BM	BN	BO	BS	BR	BQ	G	T	S	Peso (g)
040381	ASV32AQIS	32	6,6	11	18	31	21	8	32	38	51	10	20	26	10	1,6	20	158
040382	ASV40AQIS	40	6,6	11	22	35	24	10	36	41	54	10	22	28	12	1,6	20	238
040383	ASV50AQS	50	9	15	30	45	33	12	45	50	65	14	26	32	12	1,6	20	418
040384	ASV63AQIS	63	9	15	35	50	37	14	50	52	67	14	30	40	16	1,6	20	526
040385	ASV80AQIS	80	11	18	40	60	47	14	63	66	86	18	30	50	16	2,5	20	1055
040386	ASV100AQIS	100	11	18	50	70	55	17	71	76	96	20	38	60	20	2,5	20	1360
040387	ASV125AQIS	125	14	20	60	90	70	20	90	94	124	30	45	70	25	3,2	-	-

type: **SEC**

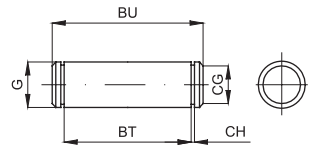

Pin for rear clevis MP2

Code	Item	For cyl. ø mm	G	BT	CG	CH	BU	Weight (g)
040261	SEC32AQIS	32	10	46	9,6	1,1	53	32
040262	SEC40AQIS	40	12	53	11,5	1,1	60	52
040263	SEC50AQIS	50	12	61	11,5	1,1	68	60
040264	SEC63AQIS	63	16	71	15,2	1,1	78	122
040265	SEC80AQIS	80	16	91	15,2	1,1	98	152
040266	SEC100AQIS	100	20	111	19	1,3	118	290
040267	SEC125AQIS	125	25	132	23,9	1,3	139	530
040268	SEC160AQIS	160	30	171,5	28,6	1,6	178	978
040269	SEC200AQIS	200	30	171,5	28,6	1,6	178	978
040270	SEC250AQIS	250	40	202	37,5	1,6	211	2100

It is supplied with 2 seegers included.

type: **CFS**

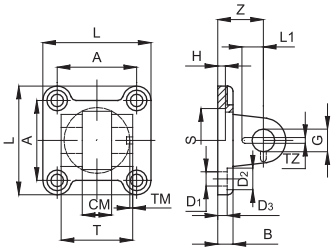

Narrow rear clevis for rear male trunnion with bearing DIN 648 K

Code	Item	For cyl. ø mm	L	T	CM	A	Z	H	B	DS	S	G	D_1	D_2	TA	TZ	LI	Weight (g)
040491	CFS32AQIS	32	45	34	14	32,5	22	5	10	5,5	30	10	6,6	11	3	3,3	11,5	140
040492	CFS40AQIS	40	55	40	16	38	25	5	10	5,5	35	12	6,6	11	4	4,3	12	230
040493	CFS50AQIS	50	65	45	21	46,5	27	5	10	6,5	40	16	9	15	4	4,3	14	336
040494	CFS63AQIS	63	75	51	21	56,5	32	5	12	6,5	45	16	9	15	4	4,3	14	546
040495	CFS80AQIS	80	95	65	25	72	36	5	16	10	45	20	11	18	4	4,3	16	1190
040496	CFS100AQIS	100	115	75	25	89	41	5	16	10	55	20	11	18	4	6,3	16	1840
040497	CFS125AQIS	125	140	97	37	110	50	7	20	10	60	30	13,5	20	6	6,3	24	3550

The pin is to be ordered separately: for pins see page 1.98.3 (SEC..ARAQIS).

type: **CMS**

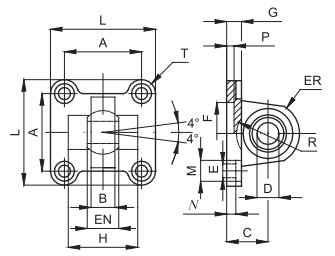

Narrow rear eye for rear male trunnion with bearing DIN 648 K

Code	Item	For cyl. ø mm	A	B	C	D	EN	ER	F	G	E	L	M	N	P	H	R	Weight (g)
040531	CMS32AQIS	32	32,5	10,5	22	10	14	15	30	10	6,6	45	10,5	5,5	5	-	-	152
040532	CMS40AQIS	40	38	12	25	12	16	18	35	10	6,6	55	11	5,5	5	-	-	256
040533	CMS50AQIS	50	46,5	15	27	16	21	20	40	10	9	65	15	6,5	5	51	19	364
040534	CMS63AQIS	63	56,5	15	32	16	21	23	45	12	9	75	15	6,5	5	-	-	595
040535	CMS80AQIS	80	72	18	36	20	25	27	45	14	11	95	18	10	5	-	-	1122
040536	CMS100AQIS	100	89	18	41	20	25	30	55	16	11	115	18	10	5	-	-	1786
040537	CMS125AQIS	125	110	26	50	30	37	40	60	20	13,5	140	20	10	7	-	-	3500

Mounting Accessories for Cylinders

Mountings for DIN ISO 6431 and VDMA 24 562 in steel

type: **ASS**

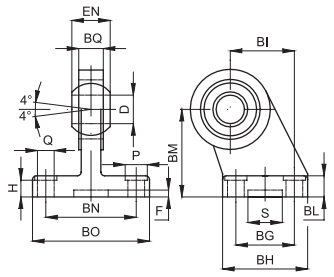

Rear 90° hinge with bearing
DIN 648 K

Code	Item	For cyl. ø mm	Q	M	BG	BH	BI	BL	BM	BN	BO	EN	ER	BQ	D	H	S	F	Weight (g)
040551	ASS32AQIS	32	6,6	11	18	31	21	10	32	38	51	14	15	10,5	10	8,5	20	3	178
040552	ASS40AQIS	40	6,6	11	22	35	24	10	36	41	54	16	18	12	12	8,5	20	3	268
040553	ASS50AQS	50	9	15	30	45	33	12	45	50	65	21	20	15	16	10,5	20	3	458
040554	ASS63AQIS	63	9	15	35	50	37	12	50	52	67	21	23	15	16	10,5	20	3	550
040555	ASS80AQIS	80	11	18	40	60	47	14	63	66	86	25	27	18	20	11,5	20	3	970
040556	ASS100AQIS	100	11	18	50	70	55	15	71	76	96	25	30	18	20	12,5	20	3	1326
040557	ASS125AQIS	125	13,5	20	60	90	70	20	90	94	124	37	40	25	30	17	20	3	3000

type: **SEC - AR**

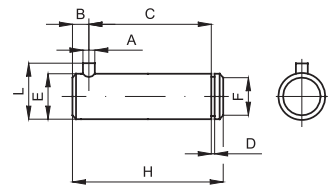

Anti-rotating pin for narrow
rear clevis

Code	Item	For cyl. ø mm	A	C	D	E	F	G	H	L	B		Weight (g)
040571	SEC32ARAQIS	32	3	32,5	1,1	10	9,6	4	41	14	4,5		26
040572	SEC40ARAQIS	40	4	38	1,1	12	11,5	4	48	16	6		42
040573	SEC50ARAQIS	50	4	43	1,1	16	15,2	5	54	20	6	0	84
040574	SEC63ARAQIS	63	4	49	101	16	15,2	5	60	20	6	-1	94
040575	SEC80ARAQIS	80	4	63	1,3	20	19	6	75	24	6		184
040576	SEC100ARAQIS	100	4	73	1,3	20	19	6	85	24	6		208
040577	SEC125ARAQIS	125	6	94	1,6	30	28,6	7	110	36	9		606
040578	SEC160ARAQIS	160	6	119	1,6	35	33	7	135	41	9	0 -2	972
040579	SEC200ARAQIS	200	6	119	1,6	35	33	7	135	41	9		972

It is supplied with 1 seeger included.

type: **FL**

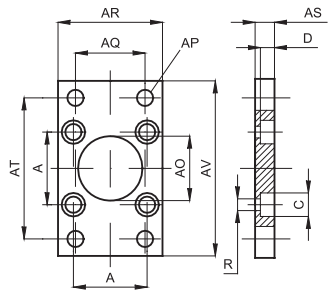

Flange ISO MF1 / MF2

Code	Item	For cyl. ø mm	A	AP	AO	R	AS	AR	AQ	AT	AV	C	D	Weight (g)
040661	FL32AQIS	32	32,5	7	30	6,5	10	45	32	64	80	10,5	6,5	190
040662	FL40AQIS	40	38	9	35	6,5	10	52	36	72	90	10,5	6,5	246
040663	FL50AQIS	50	46,5	9	40	8,5	12	65	45	90	110	13,5	8,5	478
040664	FL63AQIS	63	56,5	9	45	8,5	12	75	50	100	120	13,5	8,5	622
040665	FL80AQIS	80	72	12	45	10,5	16	95	63	126	150	16,5	10,5	1430
040666	FL100AQIS	100	89	14	55	10,5	16	115	75	150	170	16,5	10,5	1986
040667	FL125AQIS	125	110	16	60	13,5	20	140	90	180	205	20	12,5	3750
040668	FL160AQIS	160	140	18	65	17	20	180	115	230	260	25	16,5	6350
040669	FL200AQIS	200	175	22	75	17	25	220	135	270	300	25	16,5	11350
040670	FL250AQIS	250	220	26	90	22,5	25	280	165	330	390	33	20	20100

type: **FLV**

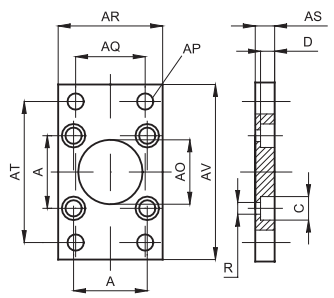

Flange VDMA MF1 / MF2

Code	Item	For cyl. ø mm	A	AP	AO	R	AS	AR	AQ	AT	AV	C	D	Weight (g)
040671	FLV32AQIS	32	32,5	7	30	6,5	10	45	32	64	80	10,5	5	192
040672	FLV40AQIS	40	38	9	35	6,5	10	52	36	72	90	11	5	250
040673	FLV50AQIS	50	46,5	9	40	9	12	65	45	90	110	15	5,5	480
040674	FLV63AQIS	63	56,5	9	45	9	12	75	50	100	120	15	5,5	620
040675	FLV80AQIS	80	72	12	45	11	16	95	63	126	150	18	8	1415
040676	FLV100AQIS	100	89	14	55	11	16	115	75	150	170	18	8	1985
040677	FLV125AQIS	125	110	16	60	13,5	20	140	90	180	205	20	9,5	3750
040678	FLV160AQIS	160	140	18	65	18	20	180	115	230	260	26	10,5	6350
040679	FLV200AQIS	200	175	22	75	18	25	220	135	270	300	26	12,5	11300

Lowered head screws type VBTR (see page 1.101.1) must be used with this mounting accessory.

GENERAL INDEX CILINDERS INDEX

type: **PB**

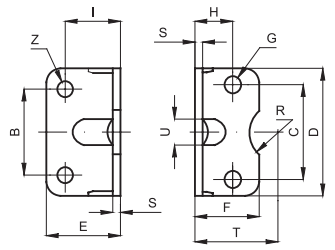

Low foot MS1

It is supplied singly.

Code	Item	For cyl. ø mm	C	B	D	E	F	G	H	I	S	T	R	U	Z	Weight (g)
040201	PB32AQIS	32	32,5	32	45	35	30	7	15,75	24	4	32	15	11	7	66
040202	PB40AQIS	40	38	36	52	36	30	7	17	28	4	36	17,5	15	9	78
040203	PB50AQIS	50	46,5	45	65	47	36	9	21,75	32	5	45	20	16	9	168
040204	PB63AQIS	63	56,5	50	75	45	35	9	21,75	32	5	50	22,5	18	9	190
040205	PB80AQIS	80	72	63	95	55	47	11	27	41	6	63	22,5	17	12	382
040206	PB100AQIS	100	89	75	115	57	53	11	26,5	41	6	71	27,5	24	14	452
040207	PB125AQIS	125	110	90	140	70	70	14	35	45	8	90	30	-	16	1090
040208	PB160AQIS	160	140	115	180	75	100	18	45	60	9	115	32,5	-	18	1188
040209	PB200AQIS	200	175	135	220	100	100	18	47,5	70	12	135	37,5	-	22	3450

type: **CT**

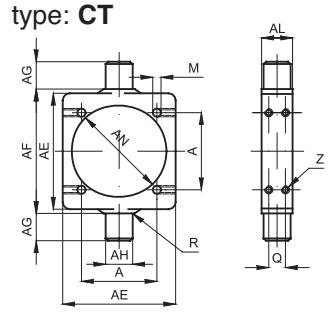

Round adjustable centre trunnion (tie rod) MT4

Code	Item	For cyl. ø mm	A	AE	AL	AH e9	AG h14	AF h14	AN	R	M	Q	Z	Weight (g)
040581	CT32AQIS	32	32,5	46	15	12	12	50	37	1	6,25	7	M5	110
040582	CT40AQIS	40	38	59	20	16	16	63	46	1,5	6,25	8	M5	290
040583	CT50AQIS	50	46,5	69	20	16	16	75	56	1,6	8,25	8	M6	330
040584	CT63AQIS	63	56,5	84	25	20	20	90	69	1,6	8,25	12	M6	650
040585	CT80AQIS	80	72	102	25	20	20	110	87	1,6	10,25	12	M8	830
040586	CT100AQIS	100	89	125	30	25	25	132	107	2	10,25	15	M8	1560
040587	CT125AQIS	125	110	155	32	25	25	160	133	2	12,25	15	M10	2450
040588	CT160AQIS	160	140	190	40	32	32	200	170	2,5	16,25	18	M12	4150
040589	CT200AQIS	200	175	240	40	32	32	250	211	2,5	16,25	18	M12	7300

type: **CTS**

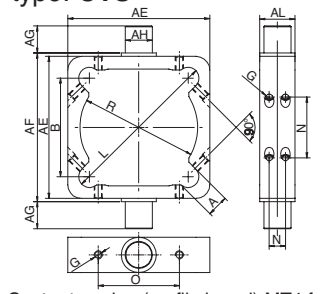

Centre trunnion (profile barrel) MT4 for cylinders AMA

Code	Item	For cyl. ø mm	B	AE	AL	AH e9	AG h14	AF h14	R	L	G	A	M	N	O	Weight (g)
040601	CTS32AQIS	32	33	48.5	18	12	12	50	37	57	M5	11	15.5	7	/	104
040602	CTS40AQIS	40	38	59	20	16	16	63	46	64	M6	11	20	8	/	234
040603	CTS50AQIS	50	48	71	20	16	16	75	56	82	M6	14	22.5	8	/	300
040604	CTS63AQIS	63	58	84	26	20	20	90	69	96	M6	14	30	12	/	577
040605	CTS80AQIS	80	73	105	26	20	20	110	87	119	M6	16	45	12	58	858
040606	CTS100AQIS	100	91	129	32	25	25	132	107	144.5	M8	17	60	15	74	1565
040607	CTS125AQIS	125	116	154	33	25	25	160	133	181	M8	18	85.5	15	104	1932

type: **CTN**

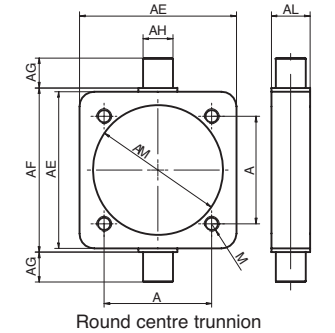

Round centre trunnion not adjustable (threaded) MT4

Code	Item	For cyl. ø mm	A	AE	AL	AH e9	AG h14	AF h14	AN	M	Weight (g)
040052	CNT32AQIS	32	32.5	46	15	12	12	50	37	M6	110
040053	CNT40AQIS	40	38	59	20	16	16	63	46	M6	290
048590	CNT50AQIS	50	46.5	69	20	16	16	75	56	M8	330
040564	CNT63AQIS	63	56.5	84	25	20	20	90	69	M8	650
040096	CNT80AQIS	80	72	102	25	20	20	110	87	M10	830
040097	CNT100AQIS	100	89	125	30	25	25	132	107	M10	1560
040098	CNT125AQIS	125	110	155	32	25	25	160	133	M12	2450
040099	CNT160AQIS	160	140	190	40	32	32	200	170	M16	4150
040100	CNT200AQIS	200	175	240	40	32	32	250	211	M16	7300
040110	CNT250AQIS	250	220	296	50	40	40	320	268	M20	13050

Mounting Accessories for Cylinders

Mountings for DIN ISO 6431 and VDMA 24 562 in steel

type: **ST**

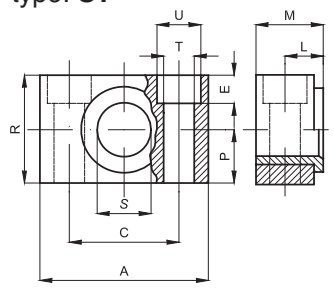

Support for centre trunnion (tie rod)

Code	Item	For cyl. ø mm	A	M	R	P	C	S	L	U	T	E	Weight (g
040681	ST32AQIS	32	46	18	30	15	32	12	10,5	11	6,6	7	100
040682	ST40-50AQIS	40-50	55	21	36	18	36	16	12	15	9	9	150
040684	ST63-80AQIS	63-80	65	23	40	20	42	20	13	18	11	11	234
040686	ST100-125AQIS	100-125	75	28,5	50	25	50	25	16	20	14	13	435
040688	ST160-200AQIS	160-200	92	40	60	30	60	32	22,5	26	18	17	850

It is supplied singly.

type: **CFA**

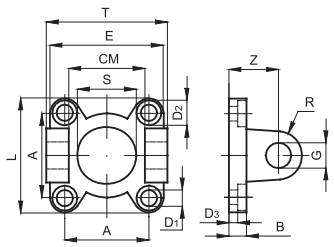

Front clevis MP7

Code	Item	For cyl. ø mm	A	E	D_1	D_2	D_3	B	S	Z	G	R	CM	T	Weight (g)
040611	CFA32AQIS	32	32,5	45	6,5	10,5	8	10	30	22	10	10	32	50	125
040612	CFA40AQIS	40	38	55	6,5	10,5	8	10	35	25	12	12	37	58	214
040613	CFA50AQIS	50	46,5	65	8,5	13,5	8	10	40	27	12	12	42	70	298
040614	CFA63AQIS	63	56,5	75	8,5	13,5	10	12	45	32	16	16	47	75	518

type: **CTA**

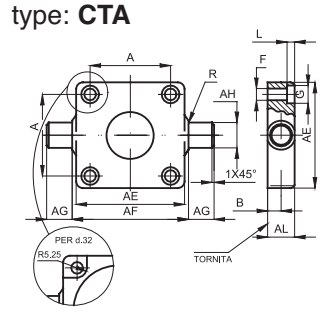

Centre trunnion (tie rod) for heads

Code	Item	For cyl. ø mm	AE	AL	AH	AG	AF	AN	A	B	F	G	L	R	Weight (g)
040591	CTA32AQIS	32	46	14	12	12	50	30	32,5	6,5	6,5	-	6	1	137
040592	CTA40AQIS	40	59	19	16	16	63	35	38	9	6,5	10,5	6	1,6	385
040593	CTA50AQIS	50	69	19	16	16	75	40	46,5	9	8,5	13,5	8	1,6	513
040594	CTA63AQIS	63	84	24	20	20	90	45	56,5	11,5	8,5	13,5	8	1,6	1041
040595	CTA80AQIS	80	102	24	20	20	110	45	72	11,5	10,5	16,5	10	1,6	1567
040596	CTA100AQIS	100	125	29	25	25	132	55	89	14	10,5	16,5	10	2	3000

1

Standard executions		
Version	Symbol	Type
Rear clevis		CF..ALCN
Rear male trunnion		AN..ALCN
Rear 90° hinge		AS..ALCN
High foot		P..ALCN
Wide high foot		PL..ALCN





Technical data	
Material	Die-cast aluminium
Treatment	Sifting

Note: The mounting screws are to be ordered separately.
For screws see page 1.101.1 (VBCI)

type: **CF**

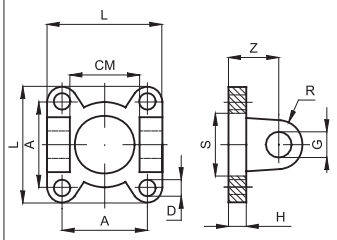

Rear clevis

Code	Item	For cyl. ø mm	A	L	D	H	CM	S	R	Z	G	Weight (g)
040401	CF32ALCN	32	33	45	7	8	26	25	8	18	8	38
040402	CF40ALCN	40	40	52	7	8	33	32	12	24	12	58
040403	CF50ALCN	50	49	65	9	10	33	32	12	26	12	118
040404	CF63ALCN	63	59	75	9	10	47	45	16	30	16	146
040405	CF80ALCN	80	75	95	11	12	47	45	16	32	16	324
040406	CF100ALCN	100	90	115	11	12	57	55	20	37	20	492
040407	CF125ALCN	125	110	140	14	16	57	55	21	41	20	978
040408	CF160ALCN	160	140	180	18	20	72	65	25	55	25	1872
040409	CF200ALCN	200	175	220	18	20	72	65	25	55	25	2800

The pin is to be ordered separately: for the pin see page 1.99.50 (SEC..AQCN)

type: **AN**

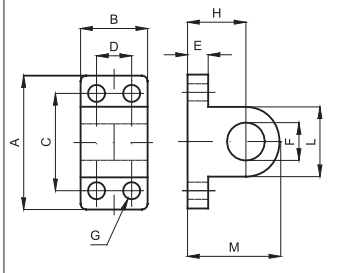

Rear male trunnion

Code	Item	For cyl. ø mm	A	B	C	D	E	F	G	H	L	M	Weight (g
040281	AN32ALCN	32	40	25	28	-	8	8	7	18	16	26	26
040282	AN40-50ALCN	40-50	52	32	38	16	10	12	9	26	24	38	56
040284	AN63-80ALCN	63-80	75	46	54	25	12	16	11	34	36	52	176
040286	AN100-125ALCN	100-125	115	56	90	32	16	20	14	41	40	61	376
040288	AN160-200ALCN	160-200	180	71	150	43	20	25	18	55	50	80	924

type: **AS**

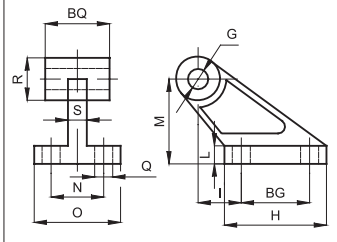

Rear 90° hinge

Code	Item	For cyl. ø mm	Q	BG	H	I	L	M	N	O	S	R	BQ	G	Weight (g
040321	AS32ALCN	32	7	20	37	18	8	32	25	41	9	19,5	25	8	58
040322	AS40-50ALCN	40-50	9	32	54	25	10	45	32	52	14	26	32	12	144
040324	AS63-80ALCN	63-80	11	50	75	32	13	63	40	63	14	32	46	16	300
040326	AS100-125ALCN	100-125	14	70	103	40	17	90	50	80	22	42	56	20	694
040328	AS160-200ALCN	160-200	18	110	154	50	20	140	63	111	26	54	70	25	1922

type: **P**

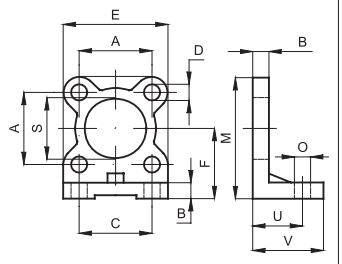

High foot

Code	Item	For cyl. ø mm	A	B	C	D	E	F	M	O	S	U	V	Weight (g)
040101	P32ALCN	32	33	8	28	7	45	32	54	9	25	27	35	54
040102	P40ALCN	40	40	8	36	7	52	36	62	9	32	27	35	70
040103	P50ALCN	50	49	10	45	9	65	45	77	11	32	35	45	150
040104	P63ALCN	63	59	10	55	9	75	50	87	11	45	35	45	170
040105	P80ALCN	80	75	12	70	11	95	63	110	14	45	43	55	354
040106	P100ALCN	100	90	12	90	11	115	73	130	14	55	43	55	470
040107	P125ALCN	125	110	16	110	14	140	91	161	18	55	52	68	918
040108	P160ALCN	160	140	20	130	18	180	115	205	22	65	62	82	2300
040109	P200ALCN	200	175	20	170	18	220	135	245	22	65	62	92	3450

It is supplied singly.

type: **PL**

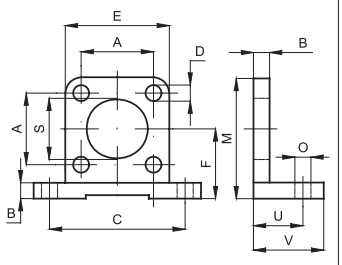

Wide high foot

Code	Item	For cyl. ø mm	A	B	C	D	E	F	M	O	S	U	V	Z	Weight (g)
040301	PL32ALCN	32	33	8	65	7	46	32	54	9	25	18	35	82	76
040302	PL40ALCN	40	40	8	72	7	52	36	62	9	32	18	35	90	90
040303	PL50ALCN	50	49	10	90	9	65	45	77	11	32	22	45	110	188
040304	PL63ALCN	63	59	10	100	9	75	50	87	11	45	22	45	120	206
040305	PL80ALCN	80	75	12	126	11	95	63	110	14	45	28	55	154	410
040306	PL100ALCN	100	90	12	148	11	115	73	130	14	55	28	55	180	576
040307	PL125ALCN	125	110	16	180	14	140	91	161	18	55	32	67,5	215	1058
040308	PL160ALCN	160	140	20	230	18	180	115	206	22	65	40	80	275	2350
040309	PL200ALCN	200	175	20	270	18	220	135	246	22	65	40	80	318	3100

It is supplied singly.

Standard executions		
Version	Symbol	Type
Flange		FL..AQCN
Low foot		PB..AQCN
Pin for rear clevis with seeger		SEC..AQCN
Round adjustable centre trunnion (tie rod)		CT..AQCN
Centre trunnion (profile barrel) for CNX		CTS..AQIS



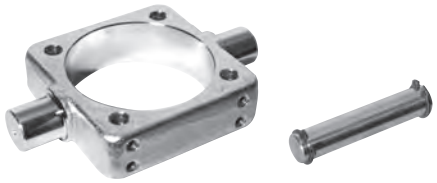

Technical data				
Type	Materials and treatments			
	Steel A105	Steel AVP	Fe 37	White zinking
FL..AQCN			•	•
PB..AQCN			•	•
SEC..AQCN		•		
CT..AQCN	•			•
CTS..AQIS	•			•

Note: The mounting screws are to be ordered separately.
For screws see page 1.101.1 (VBCI)

type: **FL**

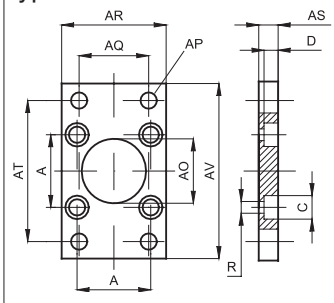

Spot-faced flange

Code	Item	For cyl ø mm	A	AP	AO	R	AS	AR	AQ	AT	AV	C	D	Weight (g)
040621	FL32AQCN	32	33	9	25	6,5	8	45	33	69	80	10,5	6	158
040622	FL40AQCN	40	40	9	32	6,5	8	52	40	78	90	10,5	6	206
040623	FL50AQCN	50	49	11	32	9	10	65	49	94	110	13,5	8	424
040624	FL63AQCN	63	59	11	45	9	10	75	59	104	120	13,5	8	504
040625	FL80AQCN	80	75	14	45	10,5	12	95	75	130	150	16,5	10	1046
040626	FL100AQCN	100	90	14	55	10,5	12	115	90	150	170	16,5	10	1480
040627	FL125AQCN	125	110	18	55	13,5	16	140	110	180	205	19	12,5	3000
040628	FL160AQCN	160	140	22	65	16,5	20	180	140	228	260	24,5	16,5	6300
040629	FL200AQCN	200	175	22	65	16,5	20	220	175	268	300	24,5	16,5	9300

type: **PB**

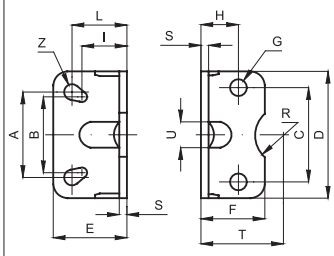

Low foot

Code	Item	For cyl. ø mm	A	B	C	D	E	F	G	H	I	L	M	N	R	S	T	U	Weight (g)
040161	PB32AQCN	32	28	32	33	45	35	30	7	15,5	22	27	4,5	3,5	12,5	4	32	11	66
040162	PB40AQCN	40	36	36	40	52	36	30	7	16	26	27	4,5	4,5	16	4	36	15	78
040163	PB50AQCN	50	45	45	49	65	45	36	9	20,5	30	35	505	4,5	16	5	45	16	168
040164	PB63AQCN	63	55	50	59	75	45	35	9	20,5	30	35	5,5	4,5	22,5	5	50	18	190
040165	PB80AQCN	80	70	63	75	95	55	45	11	25,5	37	43	7	5,5	22,5	6	63	17	382
040166	PB100AQCN	100	90	75	90	115	56	44	11	27	37,5	43	7	6,5	27,5	6	73	24	452
040167	PB125AQCN	125	100	-	110	140	70	70	14	36	-	52	9	-	27,5	8	91	-	1090
040168	PB160AQCN	160	130	-	140	180	75	100	18	45	-	62	11	-	32,5	10	115	-	1180
040169	PB200AQCN	200	170	-	175	220	100	100	18	47	-	62	11	-	32,5	12	135	-	3450

It is supplied singly.

type: **SEC**

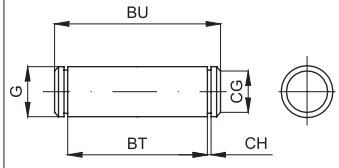

Pin for rear clevis

Code	Item	For cyl. ø mm	G	BT	CG	CH	BU	Weight (g)
040221	SEC32AQCN	32	8	46	7,6	1,1	53	21
040222	SEC40AQCN	40	12	53	11,5	1,1	60	52
040223	SEC50AQCN	50	12	66	11,5	1,1	73	64
040224	SEC63AQCN	63	16	76	15,2	1,1	83	130
040225	SEC80AQCN	80	16	96	15,2	1,1	103	160
040226	SEC100AQCN	100	20	117	19	1,3	124	304
040227	SEC125AQCN	125	20	142	19	1,3	149	364
040228	SEC160AQCN	160	25	182	23,9	1,3	189	720
040229	SEC200AQCN	200	30	222	28,6	1,6	229	872

It is supplied with 3 seegers included.

Mounting Accessories for Cylinders

Mountings for CNOMO in steel

type: **CT**

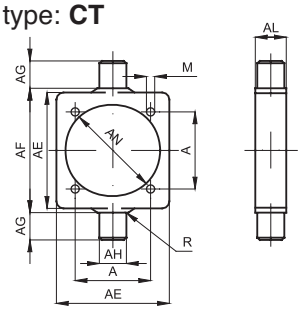

Round threaded center trunnion.
On request available adjustable with screws.

Code	Item	For cyl. ø mm	A	AE	AL	AH	AG	AF	AN	R	M	Weight (g)
040541	CT32AQCN	32	33	46	15	12	12	50	37	1	M6	130
040542	CT40AQCN	40	40	59	20	16	16	63	46	1,5	M6	306
040543	CT50AQCN	50	49	69	20	16	16	73	56	1,6	M8	370
040544	CT63AQCN	63	59	84	25	20	20	90	69	1,6	M8	702
040545	CT80AQCN	80	75	102	25	20	20	108	87	1,6	M10	894
040546	CT100AQCN	100	90	125	30	25	25	131	107	2	M10	1590
040547	CT125AQCN	125	110	155	32	25	25	160	133,5	2	M12	2600
040548	CT160AQCN	160	140	190	40	32	32	200	171	2,5	M16	4300
040549	CT200AQCN	200	175	240	40	32	32	250	211	2,5	M16	7450

Standard executions		
Version	Symbol	Type
Rear eye		CM..ALUN
Rear clevis		CF..ALUN
Flange		FL..ALUN





Technical data	
Material	Die-cast aluminium
Treatment	Sifting

Note: The mounting screws are to be ordered separately.
For screws see page 1.101.1 (VBU)

type: **CM**

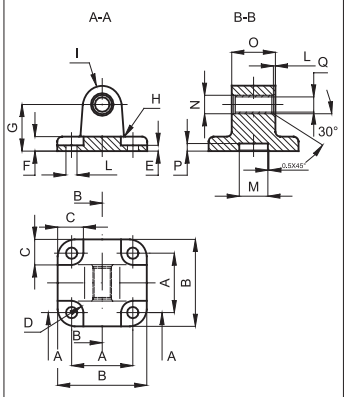

Rear eye

Code	Item	For cyl. ø mm	A	B	C	D	E	F	G	H	I	L	M	N	O	P	Q	Weight (g)
040701	CM12-16ALUN	12-16	18	27	10	4,5	2,6	6	16	2	6	4,5	10	8	12	3	6	17
040702	CM20ALUN	20	22	34	11	5	2,6	6	20	2	8	5,5	12	10	16	3	8	21
040703	CM25ALUN	25	26	38	11	5	2,6	6	20	2	8	5,5	12	10	16	3	8	27

type: **CF**

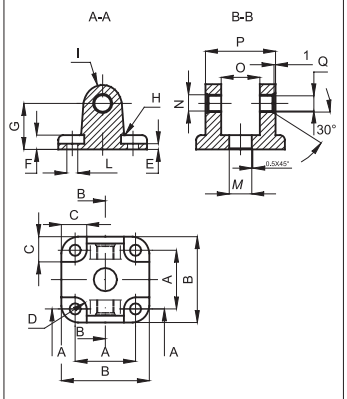

Rear clevis

Code	Item	For cyl. ø mm	A	B	C	D	E	F	G	H	I	L	M	N	O	P	Q	Weight (g)
040711	CF32ALUN	32	32	48	13,5	5,5	5,5	9	22	2,5	10	6,6	14	12	26	45	10	60
040712	CF40ALUN	40	42	58	13,5	5,5	5,5	9	25	2,5	12,5	6,6	14	14	28	52	12	104
040713	CF50ALUN	50	50	66	15,5	7,5	6,5	11	27	2,5	12,5	9	18	14	32	60	12	142
040714	CF63ALUN	63	62	83	18	7,5	6,5	11	32	4	15	9	18	18	40	70	16	240
040715	CF80ALUN	80	82	102	19	9	10	13	36	4	15	11	23	18	50	90	16	420
040716	CF100ALUN	100	103	123	19	9	10	15	41	4	20	11	28	23	60	110	20	721

The pin is to be ordered separately: for the pin see page 1.98.2 (SEC..AQIS).

type: **FL**

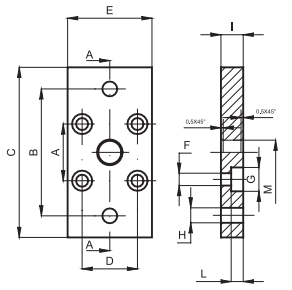

Flange ø 12 ÷ 25 mm.

Code	Item	For cyl. ø mm	A	B	C	D	E	F	G	H	I	L	M	Weight (g)
040721	FL12-16ALUN	12-16	18	43	55	18	29	4,5	9	5,5	10	5,4	10	34
040722	FL20ALUN	20	22	55	70	22	36	5,5	10	6,6	10	5,4	12	55
040723	FL25ALUN	25	26	60	76	26	40	5,5	10	6,6	10	5,4	12	68

type: **FL**

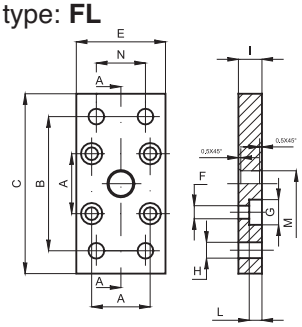

Flange ø 32 ÷ 100 mm.

Code	Item	For cyl. ø mm	A	B	C	D	E	F	G	H	I	L	M	N	Weight (g)
040724	FL32ALUN	32	32	65	80	32	50	6,6	11	7	10	6,4	14	32	88
040725	FL40ALUN	40	42	82	102	42	60	6,6	11	9	10	6,4	14	36	143
040726	FL50ALUN	50	50	90	110	50	68	9	15	9	12	8,6	18	45	204
040727	FL63ALUN	63	62	110	130	62	87	9	15	9	15	8,6	18	50	411
040728	FL80ALUN	80	82	135	160	82	107	11	18	12	15	10,6	23	63	616
040729	FL100ALUN	100	103	163	190	103	128	11	18	14	15	10,6	28	75	890

For rear 90° hinge use:
- from bore 12 to 25 mm
- from bore 32 to 100 mm

Rear clevis ISO 6432, type **CF** (see page 1.95.1).
Rear 90∞ hinge VDMA, type **ASV** (see page 1.97.2).

Standard executions		
Version	Symbol	Type
Rear eye		CM..AQUN
Rear clevis		CF..AQUN
Flange		FL..AQUN
Low foot		PB..AQUN

STEEL



Technical data				
Type	Materials and treatments			
	Steel A105	Fe 37	Black cataphoresis	White zinking
CM..AQUN	•		•	
CF..AQUN	•		•	
FL..AQUN		•		•
PB..AQUN		•		•

Note: The mounting screws are to be ordered separately.
For screws see page 1.101.1 (VBU).

type: **CM**

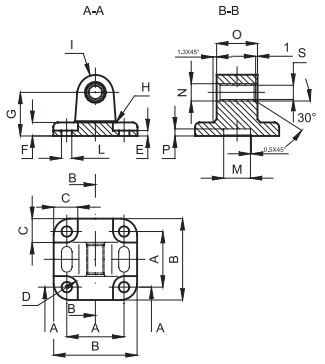

Rear eye

Code	Item	For cyl. ø mm	A	B	C	D	E	F	G	H	I	L	M	N	O	P	Q	R	S	Weight (g)
040732	CM20AQUN	20	22	34	11	5	2,6	6	20	2	8	5,5	12	10	16	3	6	28	8	64
040733	CM25AQUN	25	26	38	11	5	2,6	6	20	2	8	5,5	12	10	16	3	6	28	8	80

type: **CF**

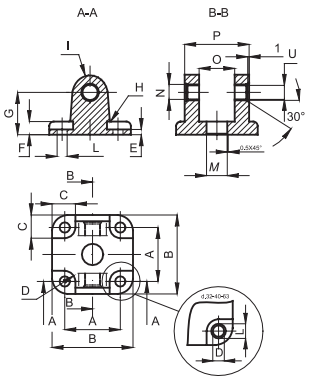

Rear clevis

Code	Item	For cyl. ø mm	A	B	C	D	E	F	G	H	I	L	M	N	O	P	Q	R	S	T	U	Weight (g)
040741	CF32AQUN	32	32	48	-	11	5,5	9	22	2,5	10	6,6	14	12	26	45	1,3	1,5	32	8	10	178
040742	CF40AQUN	40	42	58	-	11	5,5	9	25	2,5	12,5	6,6	14	14	28	52	1,3	1,3	37,5	9	12	313
040743	CF50AQUN	50	50	66	15,5	7,5	6,5	11	27	2,5	12,5	9	18	14	32	60	1,5	1,5	39,5	8	12	431
040744	CF63AQUN	63	62	83	-	15	6,5	11	32	4	15	9	18	18	40	70	1,5	1,5	47	10,5	16	707
040745	CF80AQUN	80	82	102	19	9	10	13	36	4	15	11	23	18	50	90	1,5	1,5	51	10	16	1213
040746	CF100AQUN	100	103	123	19	9	10	15	41	4	20	11	28	23	60	110	1,5	1,5	61	9	20	2200

The pin is to be ordered separately: for the pin see page 1.98.2 (SEC..AQIS).

type: **FL**

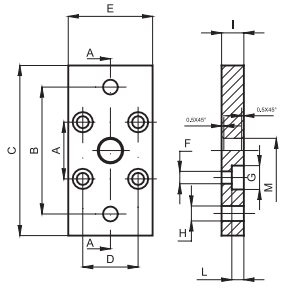

Flange ø 12 ÷ 25 mm.

Code	Item	For cyl. ø mm	A	B	C	D	E	F	G	H	I	L	M	Weight (g)
040751	FL12-16AQUN	12-16	18	43	55	18	29	4,5	9	5,5	10	5,4	10	10
040752	FL20AQUN	20	22	55	70	22	36	5,5	10	6,6	10	5,4	12	16
040753	FL25AQUN	25	26	60	76	26	40	5,5	10	6,6	10	5,4	12	20

type: **FL**

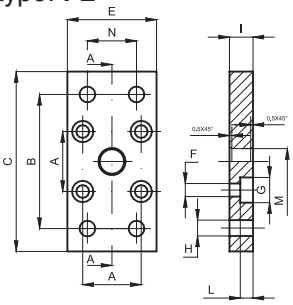

Flange ø 32 ÷ 100 mm.

Code	Articolo	For cyl. ø mm	A	B	C	D	E	F	G	H	I	L	M	N	Weight (g)
040754	FL32AQUN	32	32	65	80	32	50	6,6	11	7	10	6,4	14	32	260
040755	FL40AQUN	40	42	82	102	42	60	6,6	11	9	10	6,4	14	36	420
040756	FL50AQUN	50	50	90	110	50	68	9	15	9	12	8,6	18	45	600
040757	FL63AQUN	63	62	110	130	62	87	9	15	9	15	8,6	18	50	1200
040758	FL80AQUN	80	82	135	160	82	107	11	18	12	15	10,6	23	63	1800
040759	FL100AQUN	100	103	163	190	103	128	11	18	14	15	10,6	28	75	2550

type: **PB**

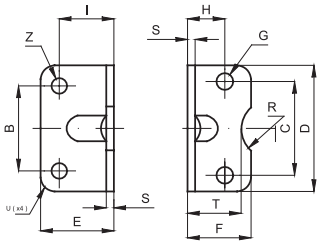

Low foot ø 12 ÷ 32 mm.

It is supplied singly.

Code	Item	For cyl. ø mm	C	B	D	E	F	G	H	I	S	T	R	U	Z	Weight (g)
040761	PB12-16AQUN	12-16	18	18	30	17,5	17,5	4,4	13	13	3	15	9	2	5,5	20
040762	PB20AQUN	20	22	22	36	22	22	5,4	16	16	4	17	10	2	6,6	32
040763	PB25AQUN	25	26	26	40	22	23	5,4	17	16	4	19	11	2	6,6	38
040764	PB32AQUN	32	32	32	50	26	24	6,6	16	18	5	20	12	2	6,6	66

type: **PB**

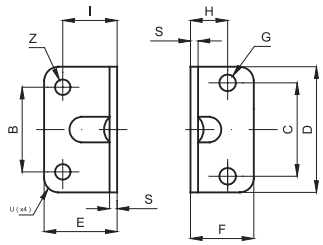

Low foot ø 40 ÷ 100 mm.

It is supplied singly.

Code	Item	For cyl. ø mm	C	B	D	E	F	G	N	I	S	U	Z	Weight (g)
040765	PB40AQUN	40	42	42	60	28	29,5	6,6	21,5	20	5	5	9	100
040766	PB50AQUN	50	50	50	68	32	30	9	22	24	6	5	9	150
040767	PB63AQUN	63	62	62	84	39	39	9	28,5	27	6	5	11	250
040768	PB80AQUN	80	82	82	102	42	36,5	11	24,5	30	8	5	11	380
040769	PB100AQUN	100	103	103	123	45	38,5	11	26,5	33	8	5	13,5	500

Standard executions		
Version	Standard	Type
Hexagon head cap screw for mounting ISO 6431 and CNOMO	UNI5931	VBIC
Hexagon head cap screw for mounting VDMA 24 562	DIN912	VBVI
Hexagon head cap screw for compact mounting UNITOP		VBU
Hexagon lowered head cap screw	DIN6912	VBTR



How to order: VBIC 032/040

VBIC	032 / 040
Type	For cylinders bore 32 and 40 mm

Material: Zinc plated steel

Screws			For cylinder mountings			
Code	**Item**	**Type**	**ISO 6431**	**VDMA 24 562**	**CNOMO**	**UNITOP**
040691	VBIC 032/040	M6x20	•		•	
040692	VBIC 050/063	M8x25	•		•	
040693	VBIC 080/100	M10x30	•		•	
040694	VBIC 125	M12x35	•		•	
040695	VBIC 160/200	M16x40	•		•	
040696	VBIC 250	M20x45	•			
040771	VBVI 032/040	M6x18		•		
040772	VBVI 050/063	M8x20		•		
040773	VBVI 080/100	M10x20		•		
040774	VBVI 125	M12x25		•		
040775	VBVI 160/200	M16x30		•		
040776	VBU 012/016	M4x12				•
040777	VBU 020/025	M5x12				•
040778	VBU 032/040	M6x18				•
040779	VBU 050	M8x20				•
040780	VBU 063	M10x20				•
040781	VBU 080/100	M10x25				•
040782	VBTR 032/040	M6x18		•		
040783	VBTR 050/063	M8x20		•		
040784	VBTR 080/100	M10x20		•		
040785	VBTR 125	M12x25		•		
040786	VBTR 160/200	M16x30		•		

Note for the use of the screws:

VBIC Long hexagon head cap screw for mountings ISO 6431 - CNOMO (without spot facings)
VBVI Short hexagon head cap screw for mountings VDMA 24 562 (with spot facings)
VBU Short hexagon head cap screw for compact mountings UNITOP
VBTR Short hexagon lowered head cap screw for mountings VDMA 24 562 (with spot facings)

Notes

GENERAL INDEX CILINDERS INDEX

Standard executions		
Version	Symbol	Type
Without mechanical stopper		DR
With mechanical stopper included		DRF



Series of adjustable hydraulic shock absorbers.
They absorb the impact energy on the rod by the displacement of oil from one chamber to another inside the body of the cushioning.
This displacement is controlled by a valve and a throttling mechanism according to the adjustment brought in.
The adjustment is carried out by a nut set in the rear end.
The adjusting field is from 0 to 9 and the nut is provided with a stopper grub screw.
The optimal cushion is obtained:
1. If the cushion is too high at the beginning of the stroke, move the nut towards 9.
2. If the cushion is too high near the end of the stroke, move the nut towards 0.

For selection of shock absorbers see page 1.105.2.

In the version without mechanical stopper the cushioning must be provided with an external one (mechanical stopper) set at 0,5 - 1 mm before the end of the stroke.

Technical data		
Temperature range	Type DR: Tipe DRF:	+ 5 °C ÷ + 70°C + 12 °C ÷ + 90°C
Materials	Body: Rod: Spring: Seals:	Burnished steel Stainless steel Steel Nitrile rubber (NBR) - Polyurethane, Elastomer
Maximum impact velocity	4 m/s	

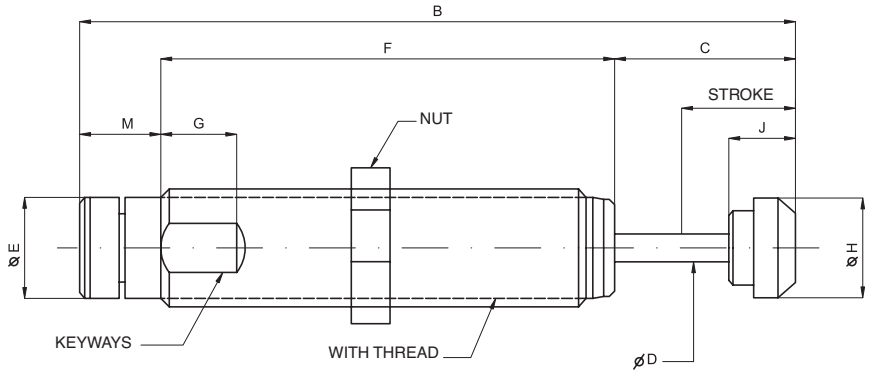

Code	Item	Stroke	A	B	C	D	E	F	G	H	I	J	M	CH	Maximum absorbing capacity (Nm) Per cicle (W3)	Maximum absorbing capacity (Nm) Per hour (W4)	Efficiency measurement minimum (Kg.)	Efficiency measurement maximum (Kg.)	Weight (g)
041801	DR1008	8	10x1	66,5	14,5	2,5	8,8	40	-	6	-	6,5	12	13	1,8	3600	0,2	10	26
041802	DR1210	10	12x1	84	18	3,5	10,8	60	-	8	-	8	6	14	4	6000	0,9	57	43
041803	DRF1412	12,5	14x1,5	87	17,5	8	12	61	12	12	12	10	8,5	17	17	35000	0,6	90	60
041804	DRF2019	19,1	20x1,5	117,9	30	4,8	16,8	74,7	12,7	16,8	18	11	13,2	24	25	45000	2,3	226	130
041805	DRF2525	25,4	25x1,5	142,6	36,3	6,3	22,4	89,7	12,7	22,9	23	11	16,6	30	88	68000	9	1360	310
041806	DRF2540	40	25x1,5	189	51,1	6,3	22,4	121,3	12,7	22,9	23	11	16,6	30	100	90000	14	2040	400

FACTORS

Simboli		
W1	= Kinetic energy per cycle	(Nm)
W2	= Motive energy per cycle	(Nm)
W3	= Total energy per cycle	(Nm)
W4	= Total energy per hour	(Nm/h)
F	= Motive power	(N)
x	= Number of cycles per hour	(1/h)
s	= Cushioning length	(m)
v	= Mass velocity	(m/s)
m	= Cushioned mass	(Kg)
ME	= Efficiency measurement	(Kg)

The **shock absorbers** are selected according to their energy absorbing capacity.
The capacity values identify both the mass that can be cushioned and the energy that can be absorbed per cycle and hour.
So the required performances must be compared with the table of the cushionings capacities to make sure that the energy can be absorbed, converted into heat and dissipated in the atmosphere.

Energy - The factors that must be considered at the moment of selection are:
- Kinetic energy (W_1): it is the energy generated by the weight and the velocity of the mass that must be cushioned.
- Motive energy (W_2): it is the work, produced by the motive power acting on the mass that must be cushioned, multiplied by the cushion length.
- Total energy per cycle (W_3): it is the sum of the 2 preceding values and is the energy that must be dissipated every cycle.
- Total energy per hour (W_4): it is the product of the total energy per cycle by the number of cycles per hour; so it is the energy the cushioning must dissipate every hour.
- Efficiency measurement (ME): it is the mass (theoretical), which, without motive power and at the same velocity of the real mass, would have a kinetic energy equal to the total energy per cycle (W_3) of the real application.
  It is not the mass that must be cushioned; it doesn't indicate the power supported by the cushioning.

HOW TO CHOOSE

The choice of the optimal cushioning can be easily made by the procedure shown here.
In any case our technicians are always at your disposal to help you to choose the fittest cushioning, to solve limit applications or study special solutions.

1) Precisely determine the data of the problem, that is the calculus factors m, v, F, x, s shown above.
2) Calculate the kinetic energy of the mass:
   $W_1 = 0{,}5 \cdot m \cdot v^2$ (Nm).
   Scegliete un deceleratore con una capacità per ciclo superiore al valore calcolato. La corsa scelta va utilizzata al punto 3).
   Choose a cushioning with a capacity per cycle higher than the calculated value. The cushion length chosen must be used at point 3).
3) If there is an external motive power (hydraulic or pneumatic cylinder, motor, gravity, etc.) calculate the work done:
   $W_2 = F \cdot s$ (Nm).
4) Calculate the total energy that must be dissipated per cycle.
   $W_3 = W_1 + W_2$ (Nm).
   Check that the value obtained is within the capacity limits of the chosen cushioning.
   Otherwise you must consider a cushioning with higher cushion length or diameter and in case calculate W_2 and W_3 again.
   It can be necessary to compare cushionings with different cushion lengths and do the calculuses again each time.
5) It is better to choose a cushioning with a capacity 25 per cent higher than the required one in order to:
   a) Let following possible increases of the impact energy.
   b) Work with safe margins when velocities are not easily valuable.
   c) Make sure that the cushioning lasts long, especially when working in dusty or contaminated environments.
6) Calculate the efficiency measurement:

$$ME = \frac{W_3 \cdot 2}{V_2} \quad (Kg)$$

Check that the value obtained is within the limits indicated for the chosen cushioning and this to get a linear and progressive cushion.

7) Were the "ME" out of the limits, you should choose a cushioning with a different capacity of efficiency measurement. Varying the cushion length you can change the "ME"; however, at each variation of the cushion length you must remember to calculate the propelling energy of the point 3 again.
8) Check whether the cushioning is condition to dissipate the energy generated by work frequency per hour into heat:

$$W4 = W3 \cdot X \quad (Nm/h)$$

9) Were the cushioning not in condition to dissipate it, you should choose among:
   a) Use of a cushioning with a higher capacity per hour taking care of calculating the point 3 again (were the cushion length different).
   b) Use of a system with recirculation or external air/oil tank, both characterised by a higher capacity per hour
   c) Cooling of the cushioning by air blow or another refrigerating fluid.

Standard executions			
Version	Circuit	Code	Item
Reed, 2 poles, with flying lead flexible cable 2,5 mt.	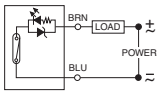	070946	ASV1C525
Reed PNP, 3 poles, with M8 connector	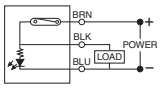	070246	ASV4D2M8
Reed-Hall PNP, 3 poles, with M8 connector	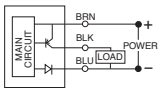	070247	ASV7N2M8
Reed-Hall NPN, 3 poles, with M8 connector	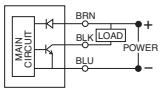	070372	ASV7M2M8
Reed, NC, 2 poles, with flying lead flexible cable 2,5 mt.	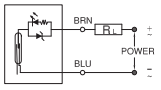	072918	ASV1H525

On request, they can be supplied according Directive 94/9/EC - **ATEX**
CE Ex II 1 GD



The magnetic reed switches are magnetic sensors responding to the presence of a magnetic field.
When mounted on a cylinder tube they detect the presence of the magnetic field generated by the magnet set on the piston and so of the piston itself.
This information is used to signal electrical circuits as required.

The sensor ASV can be applied directly to the hollows of the cylinder tube from above.

For cables with M8 connector see page 1.110.3
For fixing brackets see page 1.120.1
For cylinder/reed swiches/brackets table see page 1.120.5

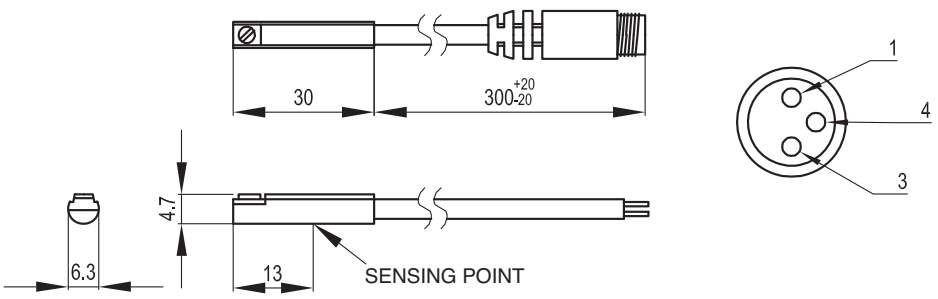

Technical data				
Circuit	Reed, 2 poles	Reed, PNP, 3 poles	Reed-Hall, PNP, 3 poles	Reed-Hall, NPN, 3 poles
Switching	Normally open		Normally open, solid state output	
Voltage	5 ÷ 240 V DC/AC	10 ÷ 30 V DC		
Switching current	100 mA max			
Contact rating	10 W	3 W max		
Voltage drop	3 V max	0,1 V max	2 V max	
LED	Red	Yellow	Yellow	Red
Cable	Ø 3,3 PU			
Temperature range	-10 °C ÷ +70 °C			
Protection class	IEC 529 IP67			
Electrical protection	-			

Standard executions			
Version	Circuit	Code	Item
Reed, 2 poles, with flying lead flexible cable 2,5 mt.	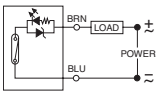	070248	ASC1C525
Reed-Hall PNP, 3 poles, with M8 connector	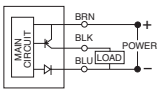	070249	ASC7N2M8
Reed-Hall NPN, 3 poles, with M8 connector	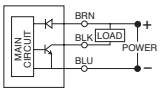	070382	ASC7M2M8



The magnetic reed switches are magnetic sensors responding to the presence of a magnetic field.
When mounted on a cylinder tube they detect the presence of the magnetic field generated by the magnet set on the piston and so of the piston itself.
This information is used to signal electrical circuits as required.

The sensor ASC can be applied directly to the grooves of the cylinder tube without further brackets.

For cables with M8 connector see page 1.110.3
For fixing brackets see page 1.120.1
For cylinder/reed swiches/brackets table see page 1.120.5

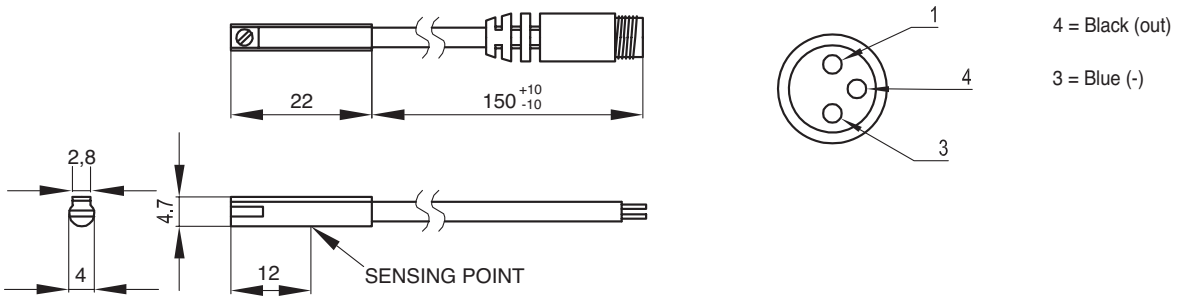

Technical data			
Circuit	Reed, 2 poles	Reed-Hall, PNP, 3 poles	Reed-Hall, NPN, 3 poles
Switching	Normally open	Normally open, solid state output	
Voltage	5 ÷ 120 V DC/AC	4,5 ÷ 28 V DC	
Switching current	50 mA max		
Contact rating	6 W	1,5 W max	
Voltage drop	3 V max	0,5 V max	
LED	Red	Green	Red
Cave	Ø 2,8 Grey	Ø 2,8 Black	
Temperature range	-10 °C ÷ +70 °C		
Protaction class	IEC 529 IP67		
Electric protection	-		

Standard executions		
Version	Code	Item
Cable mt. 2 with M8 connector	070269	CAV20M8
Cable mt. 5 with M8 connector	070250	CAV50M8
Cable mt. 10 with M8 connector	070298	CAV1KM8



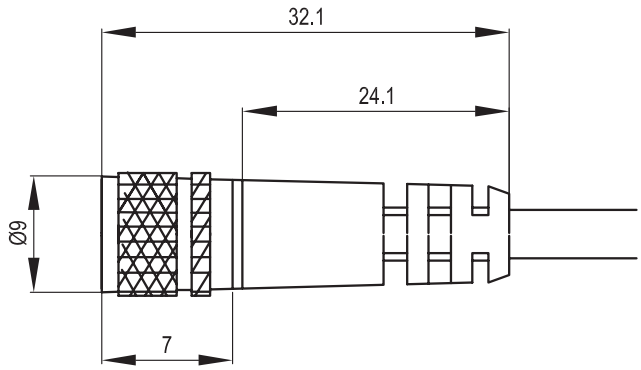

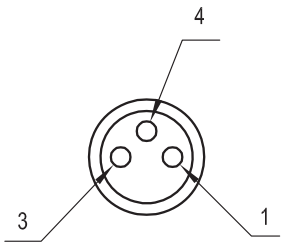

1 = Brown

4 = Black

3 = Blue

Technical data		
Material of the cable	PVC black	
Material of the connector	Body :	Polipropilene
	Contacts:	Gilded brass
	Nut:	Nickel plated brass
Cable data	3 x 24 AWG / 0,22 mm² flexble, spatter resistant, oil resistant, insulation 300 V	
Temperature	- 20 °C ÷ + 80 °C	
Protection	IP 67	

Standard executions		
Version	Code	Item
Locking band for cylinder ISO 6432 ø 8 mm	072901	AFM8
Locking band for cylinder ISO 6432 ø 10 mm	072902	AFM10
Locking band for cylinder ISO 6432 ø 12 mm	072903	AFM12
Locking band for cylinder ISO 6432 ø 16 mm	072904	AFM16
Locking band for cylinder ISO 6432 ø 20 mm	072905	AFM20
Locking band for cylinder ISO 6432 ø 25 mm	072906	AFM25
Locking band for round cylinders 32 ÷ 63 mm	072907	AFR3263
Bracket for AMB cylinders ø 32 and 40 mm	072908	AS101
Bracket for AMB cylinders ø 50 and 63 mm	072909	AS102
Bracket for AMB cylinders ø 80 and 100 mm	072910	AS103
Bracket for AMB cylinder ø125 mm	072911	AS104
Bracket for tie rod cylinders ø 32 and 40 mm	072912	AS105
Bracket for tie rod cylinders ø 50 and 63 mm	072913	AS106
Bracket for tie rod cylinders ø 80 and 100 mm	072914	AS107
Bracket for tie rod cylinders ø 125 mm	072909	AS102
Bracket for cylinders ø 160 e 200 mm	072910	AS103
Bracket for short stroke cylinders	072915	AS108
Bracket for rodless cylinders	072916	AS109



Series of brackets used to fix the different types of magnetic reed switches for the different types of existing cylinders.
For the cylinders/reed switches/brackets table see page 1.120.5

Locking bands for cylinders ISO 6432	
Material: Polyamide	Mounting screw included in the Kit

Code	Item	A	B	C	Ø D	E	F
072901	AFM8	21,4	18,9	6,45	9,3	18	9
072902	AFM10	23,4	20,9	7,45	11,3	18	9
072903	AFM12	25,4	22,9	8,45	13,3	18	9
072904	AFM16	29,4	26,9	10,45	17,3	18	9
072905	AFM20	33,4	30,9	12,45	21,3	18	9
072906	AFM25	38,4	35,9	14,95	26,3	18	9

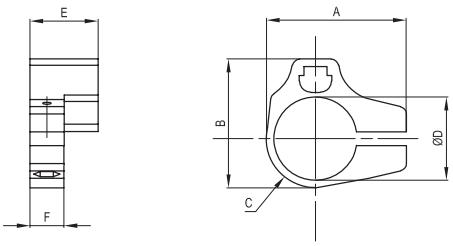

Locking bands for round cylinders Ø 32-63		
072907	AFR3263	Metal bracket, screw and adaptor included in the Kit

GENERAL INDEX
CILINDERS INDEX

Brackets for cylinders ISO 6431

Material: Aluminium | Mounting screw included in the Kit

Code	Item	A	B	C	D	E
072908	AS101	11,4	11,3	5,4	6,7	3,4
072909	AS102	14,5	13,7	5,4	6,7	3,4
072910	AS103	16,99	19,11	5,4	6,7	3,4
072911	AS104	17,8	26,0	5,4	6,7	3,4
072912	AS105	6,5	7,29	5,4	6,7	3,4
072913	AS106	8,42	9,76	5,4	6,7	3,4
072914	AS107	10,31	10,79	5,4	6,7	3,4

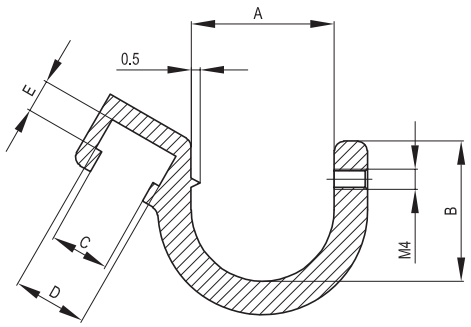

Brackets for short stroke cylinders

Material: Polyamide

Code	Item
072915	AS108

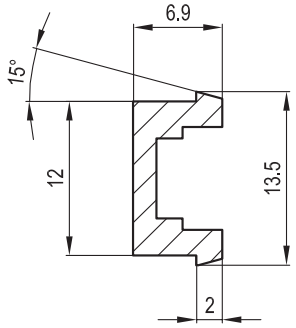

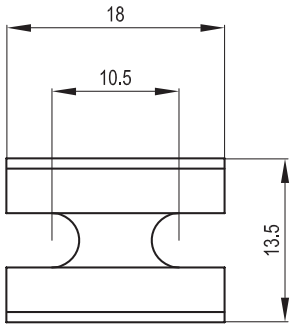

Brackets for rodless cylinders

Material: Polyamide

Code	Item
072916	AS109

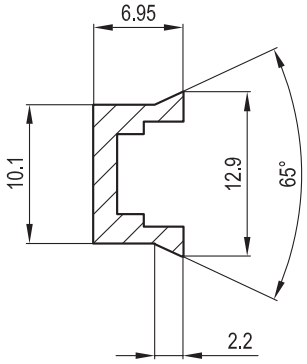

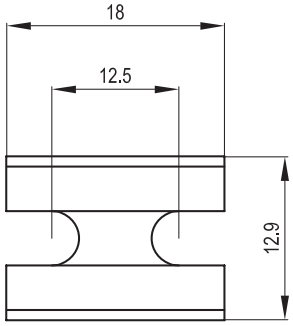

Table of coupling cylinders/hand grips/brackets/reed switches

Cylinder type	Locking bands for cylinder switches		Brackets for cylinder switches			Switches for cylinders	
	ø 8 ÷ 25 mm. see page 1.120.1	ø 32 ÷ 63 mm. see page 1.120.1	with tie rods ø 5 ÷ 16 see page 1.120.1	with extruded tube ø 32 ÷ 125 see page 1.120.1	short stroke see page 1.20.1	see page 1.110.1	
	AFM8 ÷ AFM25	**AFR3263**	**AS10**	**AS10**	**AS108**	**ASC**	**ASV**
MSM-MDM-MDMA	•						•
AMA/AMG							•
AMT			•				•
REDM		•					•
CXM			•				•
CS-CD-CDN							•
BSM-BDM BDMN-BDMP					•		•
BDM (125-160-200)			•				•
GEDB-GEDS						•	
S1-S2-S S4-S5-S6						•	
CR-CRF CRR-CRRF				•			•
MDMX	•						•
AMX			•				•
PAB-PAC-PPB PPC-PPD-PPE						•	
ARC-ARP						•	

Technical data:
Flow of the valves.

%

from page 2.1.1

15 mm directly operated solenoid valves



from page 2.2.1

Electrically and pneumatically operated valves, size 15 mm.



from page 2.10.1

Electrically and pneumatically operated valves, size 18 mm.



from page 2.30.1

Electrically and pneumatically operated valves 1/8".



from page 2.50.1

Electrically and pneumatically operated valves 1/4"



from page 2.70.1

NAMUR solenoid valves 1/4"

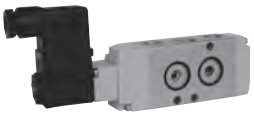

from page 2.88.1

Electrically and pneumatically operated valves 1/2"



from page 2.90.1

Electrically and pneumatically operated valves ISO 1



from page 2.110.1

Electrically and pneumatically operated valves ISO 2



from page 2.130.1

Indirectly operated solenoid valves for water and steam



from page 2.165.1

Integrated circuits



from page 2.170.1

Coils



from page 2.200.1

Connectors



from page 2.210.1

Manually operated valves 1/8"



from page 2.230.1

Manually operated valves 1/4"



from page 2.236.1

Foot valves



from page 2.250.1

Microvalves ø 4 and manual operating devices



from page 2.255.1

Mechanically operated valves ø 4



from page 2.270.1

Mechanically operated valves 1/8"



from page 2.275.1

Slide valves



from page 2.300.1

Ball valves



from page 2.310.1

Quick exhaust valves



from page 2.360.1

Uni-directional, safety and piloted stop valves



from page 2.370.1

Rotary actuators with ball valve



from page 2.430.1

Accessories for rotary actuators with ball valve



from page 2.431.30

Flow of the valves:

The quantity of compressed air that can flow through the valve depends on the size of the orifices and the type of course that must be followed within the valve itself by the fluid under pressure. The flow of a valve is measured using suitable measuring circuits with the hypothesis that the upstream pressure is constant and that quantity of air required downstream is variable.

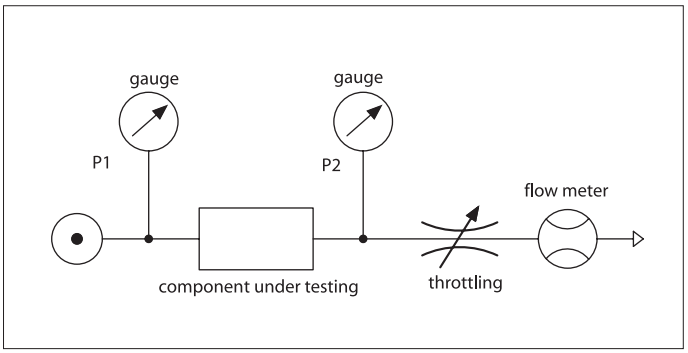

Curves known as "**FLOW CHARACTERISTICS**" are drawn, which indicate how the flow of the valve varies with the variation in downstream pressure, with a constant pressure supply. **Once these characteristics are known, the flow of the valve is also known in all working conditions.**
These curves show how the study model adopted for a valve - which consists of comparing it with a converging nozzle that releases a compressible gas with constant upstream pressure - is reasonably valid. Indeed, according to this model, the flow that passes through the nozzle depends on the following factors: the upstream pressure, the difference in pressure **Δp** and the valvular coefficient **Kv.**
The coefficient **Kv** summarizes the characteristics of the internal passages of the valve and is represented by the **"number of litres of water that flow through the valve in one minute, in normal conditions (atmospheric pressure, 20 °C) in the presence of a fall in pressure Δp [AS1]= 1 bar.**

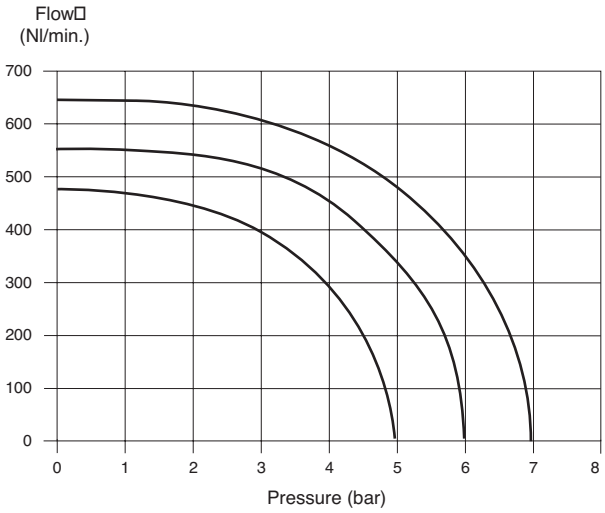

The following formula constitutes the relationship between all the aforementioned elements:

$Q = 28{,}3\ Kv \sqrt{\Delta p\ (p1 - \Delta p)}$ where

Q = flow [nl/min]
Kv = valvular coefficient of the H2O valve [nl/min]
Δp = p1 - p2 = fall in pressure between upstream and downstream [bar]
p1 = absolute pressure upstream [bar]
28,3 = conversion coefficient from water to air

So: the capacities calculated with the given formula differ little from those that can be obtained from the flow characteristic of the corresponding valve.
Furthermore, it also provides confirmation, from the characteristic itself, of the limits of validity of the formula.
It is only valid for Δp < **Ω** p1; i.e. only up until the fall of pressure across the valve reaches a value equivalent to half the absolute supply pressure.

In this condition the air reaches max. velocity (critical velocity **Vc**) and consequently maximum capacity **Qmax**.
For Δp < **Ω** p1, the pressure energy is converted into kinetic energy with an increase in velocity and consequently capacity. For Δp < **Ω** p1, the extra pressure energy is no longer converted into velocity energy, but dissipated in local turbulences in the form of heat.

All of this is confirmed by the flow characteristics.
From the same characteristics it is possible to discover that that the value of the flow with Δp = 1 bar is ≅ 2/3 Qmax.
The capacity corresponding to Δp = 1 bar is defined **"NOMINAL FLOW Qn".**
In the case of a valve, a different flow characteristic exists for each absolute supply pressure, and thus corresponding values for Qmax. and Qn.
Falls in pressure of Δp > 1 bar are too economically onerous, and for this reason it is advisable to limit the falls in pressure to Δp = 0,5 bar, by choosing a larger size valve.

In the catalogue reference is normally made to the nominal flow, but the flow characteristics and the valvular coefficient are also provided.
Let's calculate, for example, the flow of a valve with Kv = 12 NL/min, P_1 = 6 bar,

ΔP = 0,5 bar
Q = $28{,}3*12\sqrt{0{,}5\ (7-0{,}5)}$ = 612 [Nl/min]
Qn = 831 [Nl/min]
Q max = 1118 [Nl/min]

GENERAL INDEX
VALVES INDEX

15 mm directly operated solenoid valves

3/2, normally open and normally closed

Executions			
Version	Symbol	Code	Item
3/2, N. C. 12 V DC	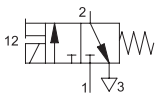	034601	AE05C01200
3/2, N. C. 24 V DC		034602	AE05C02400
3/2, N. C. 24 V AC		034603	AE05C02450
3/2, N. C. 110 V AC		034604	AE05C11050
3/2, N. C. 230 V AC		034605	AE05C22050
3/2, N. A. 12 V DC	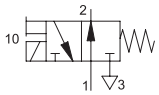	034611	AE05A01200
3/2, N. A. 24 V DC		034612	AE05A02400
3/2, N. A. 24 V AC		034613	AE05A02450
3/2, N. A. 110V AC		034614	AE05A11050
3/2, N. A. 230 V AC		034615	AE05A22050



Series of directly operated poppet valves for single or manifold sub-bases, standard with coil and without connector.
The single base is M5 threaded.
The manifold bases can be supplied with M5 ports or with integral 4 mm push-in fitting.
For sub-bases see page 2.2.2.
For the connectors type A19207.. see page 2.210.10.

Note: The maximum couple of locking of M3 screws must not exceed 0,5 Nm.
(The locking screws are included together with the valve).

Technical data		
Fluid	Compressed filtered air with or without lubrication	
Pressure range	Normally closed: 0 ÷ 10 bar	Normally open 0 ÷ 8 bar
Temperature range	-15 °C ÷ + 50°C	
Orifice	Normally closed: 1,2 mm	Normally open: 1 mm
Nominal flow at 6 bar	Normally closed: 29 Nl/min	Normally open: 26 Nl/min
Manual override	Two stable position, flat	
Response time	10 ÷ 15 ms	
Mounting	In any position	
Duty cycle	ED 100%	
Voltage tolerance	± 10%	
Protection class	IP 65 (with connector already mounted)	
Electrical consumption	2,5 W	
Materials	Body: Acetal resin	
	Internal parts: Acetal resin - stainless steel	
	Seals: Nitrile rubber (NBR)	
	Screws: Zinc plated steel	

type: **AE05...**

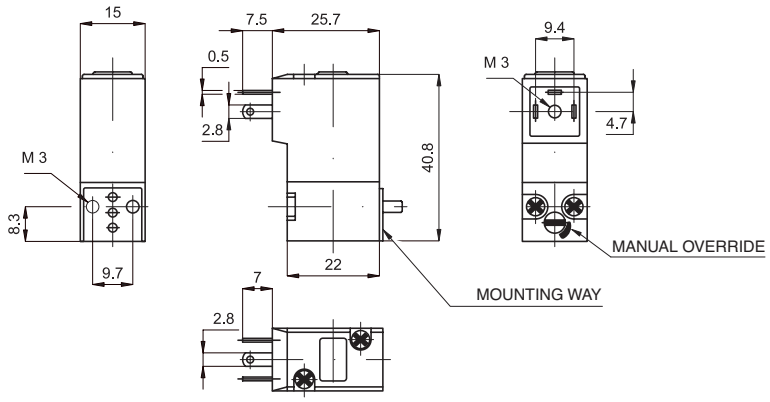

Single base — type: **ABAS05S**

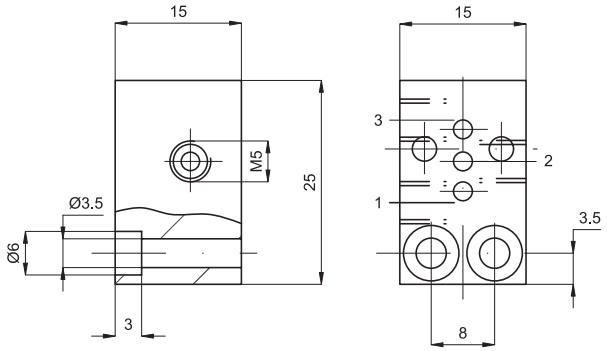

Code	Item
034621	ABAS05S

Closing plate — type: **ABAS05T**

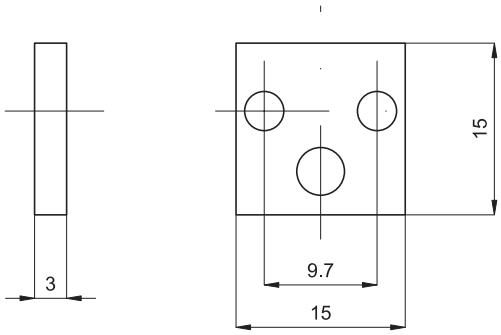

Code	Item
034622	ABAS05T

Manifold base — type: **ABAS05...**

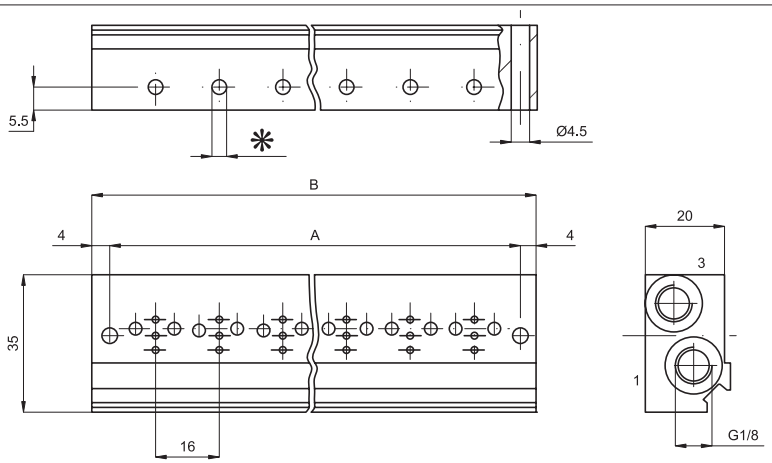

With M5 ports				With push-in fitting 4 mm tube ports					
Code	Item	Positions	*	Code	Item	Positions	*	A	B
034625	ABAS050205	2		034641	ABAS050204	2		39	47
034626	ABAS050305	3		034642	ABAS050304	3		55	63
034627	ABAS050405	4		034643	ABAS050404	4		71	79
034628	ABAS050505	5		034644	ABAS050504	5		87	95
034629	ABAS050605	6	M5	034645	ABAS050604	6	4 mm.	103	111
034630	ABAS050705	7		034646	ABAS050704	7		119	127
034631	ABAS050805	8		034647	ABAS050804	8		135	143
034632	ABAS050905	9		034648	ABAS050904	9		151	159
034633	ABAS051005	10		034649	ABAS051004	10		167	175

Executions			
Version	Symbol	Code	Item
1/8” ports	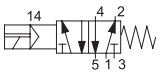	035051	AE15181520
EXTERNAL AIR PILOT			
1/8” ports	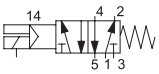	035061	AE15181520K

Note: The fixing screws for mounting on sub-base are included in the base kit.
The maximum torque of the fixing screw of the coil must not exceed 1Nm.



type: **AE15181520**
AE15181520K

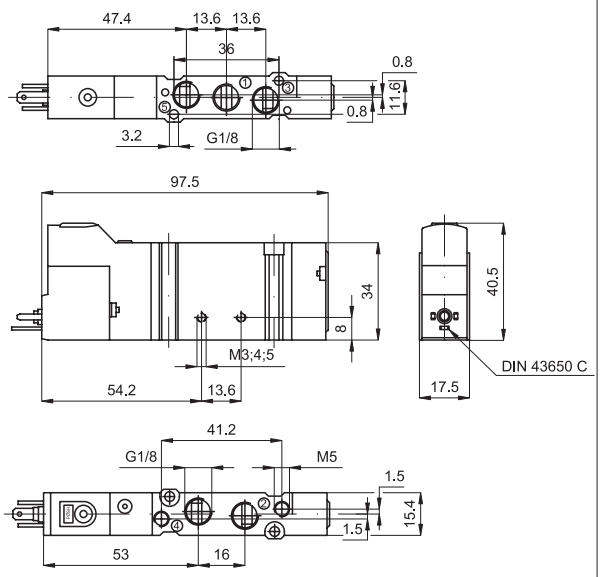

Series of spool valves with reduced dimensions and low electrical consumption, thanks to which they can be operated directly by electronic systems.
The ports are available in various configurations for mounting on base or single use; in case of single use the relevant fixing plate must be applied.
Coils and connectors are to be ordered separately.

For the fixing plate type PF 1518 see page 2.20.1.
For the coils type ASA 18.. see page 2.200.1.
For the connectors type A05207.. see page 2.210.1.
For the sub-bases type SB15.. see page 2.20.1.

In the external air pilot versions the ports for external piloting are M5.

Technical data		
Fluid	Compressed filtered air with or without lubrication. Lubrication, if be used, must be continous.	
Pressure range	2 ÷ 8 bar	With external air pilot: 0 ÷ 8 bar
Temperature range	-5 °C ÷ + 50°C	
Orifice	6 mm	
Flow	800 Nl/min	
Manual override	Single stable position, flat	
Response time	Energising: 24 ms	De-energising: 35 ms
Mounting	In any position	
Materials	Body: Die-cast aluminium Heads: Acetal resin Seals: Nitrile rubber (NBR)	

Electrically and pneumatically operated valves, sizes 15 and 18 mm

Size 15 mm, 5/2 electric two stable position

Executions			
Version	Symbol	Code	Item
1/8” ports	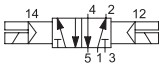	035071	AE15182520
EXTERNAL AIR PILOT			
1/8” ports	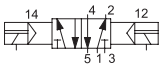	035081	AE15182520K



Note: The fixing screws for mounting on sub-base are included in the base kit.
The maximum torque of the fixing screw of the coil must not exceed 1Nm.

type: **AE15182520**
AE15182520K

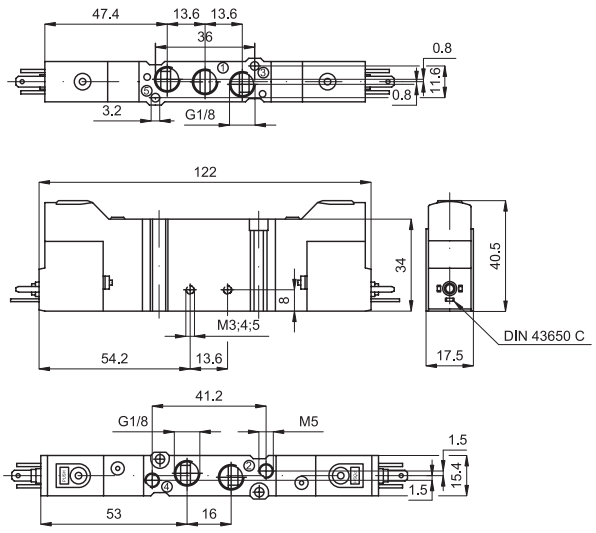

Series of spool valves with reduced dimensions and low electrical consumption, thanks to which they can be operated directly by electronic systems.
The ports are available in various configurations for mounting on base or single use; in case of single use the relevant fixing plate must be applied.
Coils and connectors are to be ordered separately.

For the fixing plate type PF 1518 see page 2.20.1.
For the coils type ASA 18.. see page 2.200.1.
For the connectors type A05207.. see page 2.210.1.
For the sub-bases type SB15.. see page 2.20.1.

In the external air pilot versions the ports for external piloting are M5.

Technical data		
Fluid	Compressed filtered air with or without lubrication. Lubrication, if be used, must be continous.	
Pressure range	2 ÷ 8 bar	With external air pilot: 0 ÷ 8 bar
Temperature range	-5 °C ÷ + 50°C	
Orifice	6 mm	
Flow	800 Nl/min	
Manual override	Single stable position, flat	
Response time	Energising: 24 ms	
Mounting	In any position	
Materials	Body:	Die-cast aluminium
	Heads:	Acetal resin
	Seals:	Nitrile rubber (NBR)

Executions			
Version	Symbol	Code	Item
1/8" ports, with closed centres	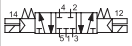	035091	AE1518253C
1/8" ports, with open centres		035094	AE1518253A
1/8" ports, pressurised centres	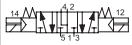	035097	AE1518253P
EXTERNAL AIR PILOT			
1/8" ports, with closed centres	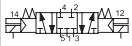	035101	AE1518253CK
1/8" ports, with open centres	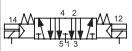	035104	AE1518253AK
1/8" ports, pressurised centres		035107	AE1518253PK

Note: The fixing screws for mounting on sub-base are included in the base kit.
The maximum torque of the fixing screw of the coil must not exceed 1Nm.

type: **AE1518253...**

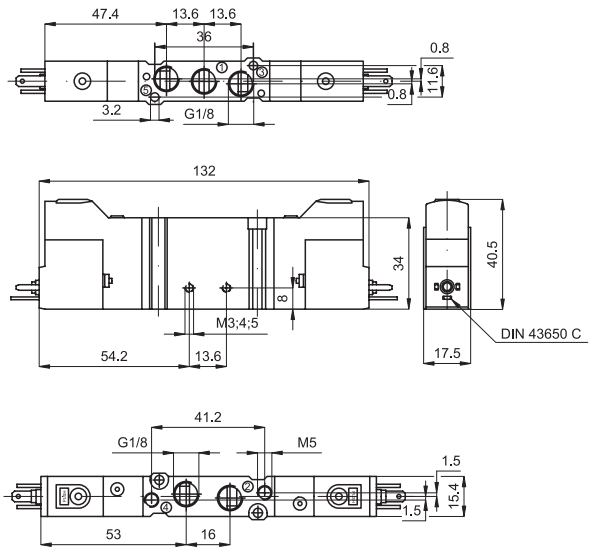

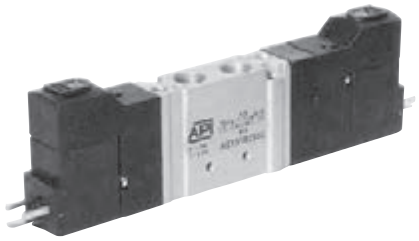

Series of spool valves with reduced dimensions and low electrical consumption, thanks to which they can be operated directly by electronic systems.
The ports are available in various configurations for mounting on base or single use; in case of single use the relevant fixing plate must be applied.
Coils and connectors are to be ordered separately.

For the fixing plate type PF 1518 see page 2.20.1.
For the coils type ASA 18.. see page 2.200.1.
For the connectors type A05207.. see page 2.210.1.
For the sub-bases type SB1.. see page 2.20.1.

In the external air pilot versions the ports for external piloting are M5.

Technical data		
Fluid	Compressed filtered air with or without lubrication. Lubrication, if be used, must be continous.	
Pressure range	3 ÷ 8 bar	With external air pilot: 0 ÷ 8 bar
Temperature range	-5 °C ÷ + 50°C	
Orifice	6 mm	
Flow	600 Nl/min	
Manual override	Single stable position, flat	
Response time	Energising: 24 ms	De-energising: 35 ms
Mounting	In any position	
Materials	Body: Die-cast aluminium Heads: Acetal resin Seals: Nitrile rubber (NBR)	

Executions			
Version	Symbol	Code	Item
1/8" ports, single stable position		035111	AP15181520
1/8" ports, two stable positions	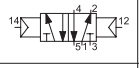	035121	AP15182520
1/8" ports two stable positions, differential		035131	AP15182521

Note: The fixing screws for mounting on sub-base are included in the base kit.



type: **AP1518...**

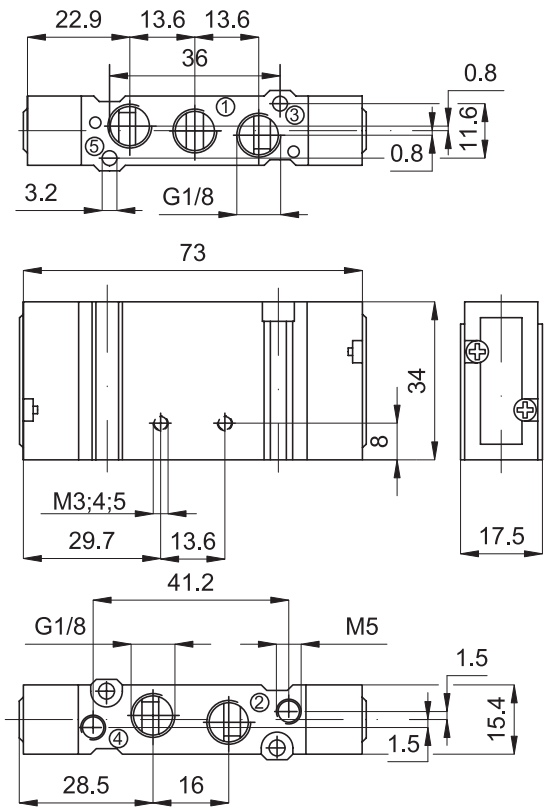

Series of spool valves with reduced dimensions.
The ports are available in various configurations for mounting on base or single use; in case of single use the relevant fixing plate must be applied.

For the fixing plate type PF 1518 see page 2.20.1.
For the sub-bases type SB15.. see page 2.20.1.

The air piloting ports are M5 threaded.

Technical data		
Fluid	Compressed filtered air with or without lubrication. Lubrication, if be used, must be continous.	
Pressure range	2 ÷ 8 bar	
Temperature range	-5 °C ÷ + 50°C	
Orifice	6 mm	
Flow	800 Nl/min	
Mounting	In any position	
Materials	Body:	Die-cast aluminium
	Heads:	Acetal resin
	Seals:	Nitrile rubber (NBR)

Executions			
Version	Symbol	Code	Item
1/8" ports, with closed centres	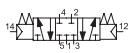	035141	AP1518253C
1/8" ports, with open centres	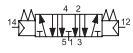	035144	AP1518253A
1/8" ports, with pressurised centres	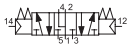	035147	AP1518253P

Note: The fixing screws for mounting on sub-base are included in the base kit.



type: **AP1518253...**

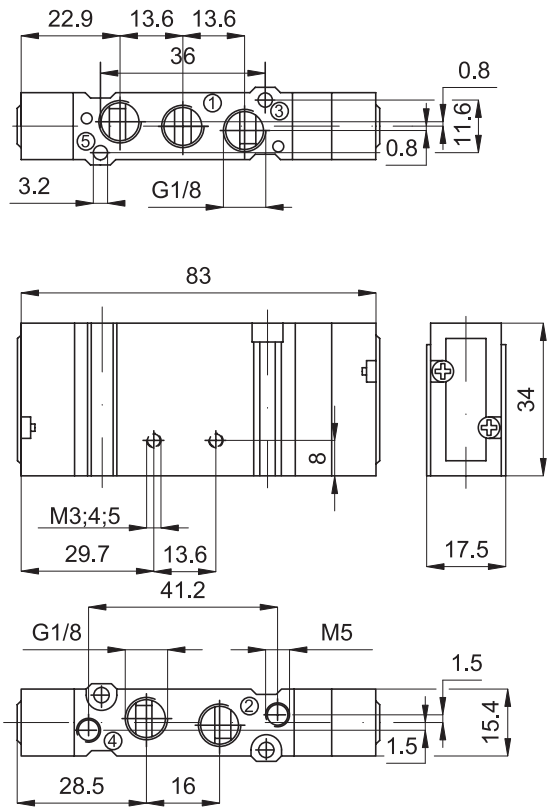

Series of spool valves with reduced dimensions.
The ports are available in various configurations for mounting on base or single use; in case of single use the relevant fixing plate must be applied.

For the fixing plate type PF 1518 see page 2.20.1.
For the sub-bases type SB15.. see page 2.20.1.

The air piloting ports are M5 threaded.

Technical data		
Fluid	Compressed filtered air with or without lubrication. Lubrication, if be used, must be continous.	
Pressure range	2 ÷ 8 bar	
Temperature range	-5 °C ÷ + 50°C	
Orifice	6 mm	
Flow	600 Nl/min	
Mounting	In any position	
Materials	Body:	Die-cast aluminium
	Heads:	Acetal resin
	Seals:	Nitrile rubber (NBR)

Executions			
Version	Symbol	Code	Item
Intermediate sub-base		035152	SB15A
Intermediate blank sub-base		035153	SB15C
End plate kit one inlet and one blank		035154	SB15CA
Ported end plates (2 off)		035155	SB15AA
Manifold blanking plate		035156	SB15T
Mounting bracket for single valve		035151	PF1518
Interface for sub-base from size 15 to 18 mm		035157	SB1518

The blank intermediate sub-base can be used to separate 2 inlets at different pressures on the same manifold.

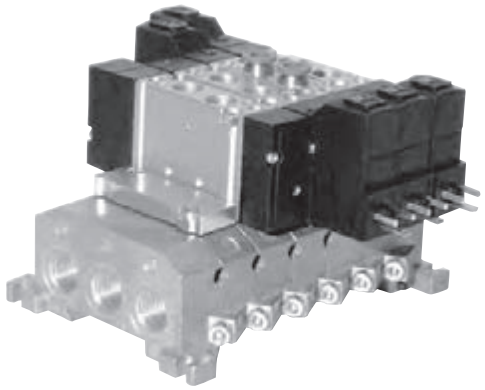

Materials:	Die-cast aluminium Seals: Nitrile rubber (NBR) Screws: Zinc plated steel

The intermediate sub-base kit includes:
2 screws and 1 seal for mounting the valve
2 screws and 1 seal for assembling the manifold.
The end plate kit includes:
2 screws and 1 seal for assembling the manifold.
The interface kit includes:
2 screws and 1 seal for assembling the manifold.

type: **SB15A**
SB15C

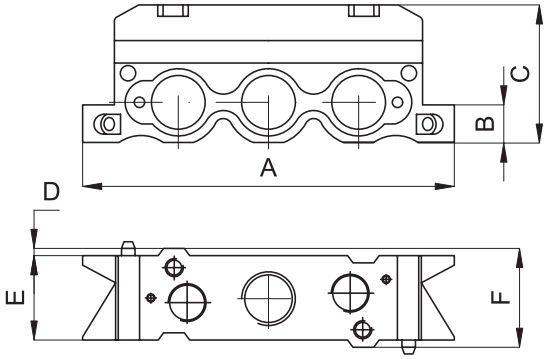

A	B	C	D	E	F
82	8,5	30	1,1	16	18,2

type: **SB1518**

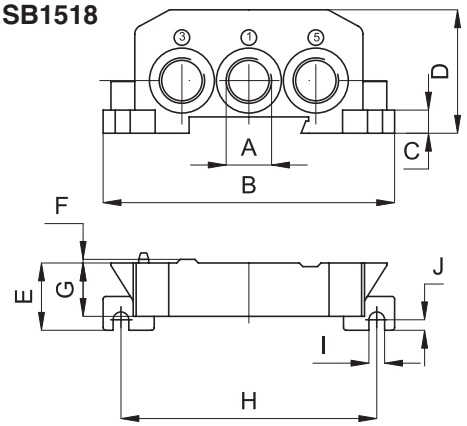

A	B	C	D	E	F	G	H	I	J
1/4"	87	7	37	20	1,1	16	75	4,5	3

type: **SB15CA**
SB15AA

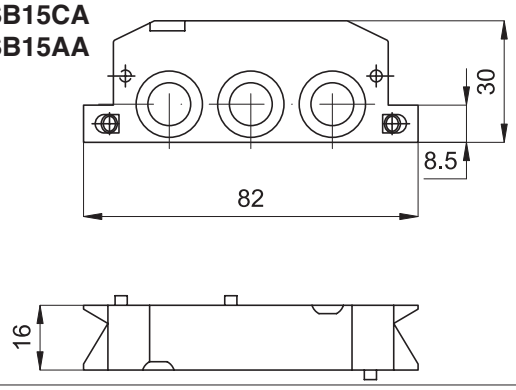

type: **PF1518**

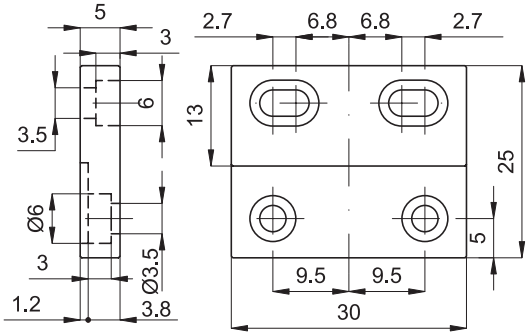

GENERAL INDEX
VALVES INDEX

Overall dimensions for manifold with valves mounted

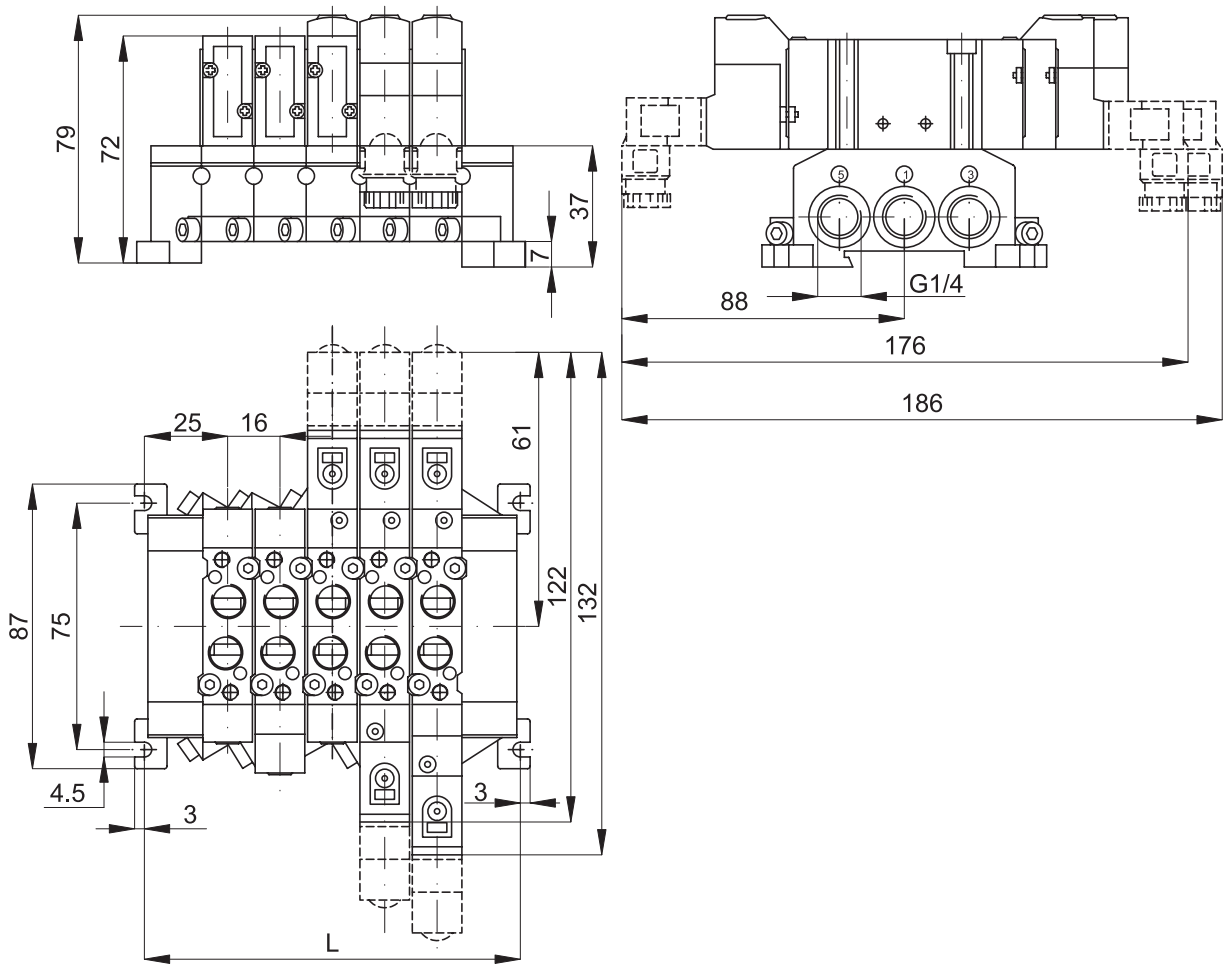

Positions	2	3	4	5	6	7	8	9	10	11	12	13	14	15	16	17	18	19	20
L	66	82	98	114	130	146	162	178	194	210	226	242	258	274	290	306	322	338	354

Electrically and pneumatically operated valves, sizes 15 and 18 mm

Size 18 mm, 5/2 electric single stable position

Executions			
Version	Symbol	Code	Item
1/4” ports	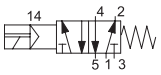	035201	AE18141520
EXTERNAL AIR PILOT			
1/4” ports	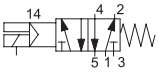	035211	AE18141520K



Note: The fixing screws for mounting on sub-base are included in the base kit.
The maximum torque of the fixing screw of the coil must not exceed 1Nm.

type: **AE18141520**
AE18141520K

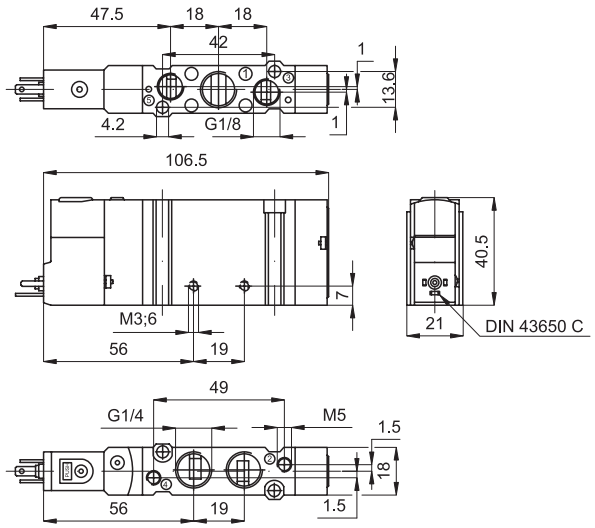

Series of spool valves with reduced dimensions and low electrical consumption, thanks to which they can be operated directly by electronic systems.
The ports are available in various configurations for mounting on base or single use; in case of single use the relevant fixing plate must be applied.
Coils and connectors are to be ordered separately.

For the fixing plate type PF 1518 see page 2.20.1.
For the coils type ASA 18.. see page 2.200.1.
For the connectors type A05207.. see page 2.210.1.
For the sub-bases type SB18.. see page 2.40.1.

In the external air pilot versions the ports for external piloting are M5.

The exhausts are 1/8”.

Technical data		
Fluid	Compressed filtered air with or without lubrication. Lubrication, if be used, must be continous.	
Pressure range	2 ÷ 8 bar	With external air pilot: 0 ÷ 8 bar
Temperature range	-5 °C ÷ + 50°C	
Orifice	8 mm	
Flow	1200 Nl/min	
Manual override	Single stable position, flat	
Response time	Energising: 24 ms	De-energising: 35 ms
Mounting	In any position	
Materials	Body: Die-cast aluminium Heads: Acetal resin Seals: Nitrile rubber (NBR)	

GENERAL INDEX VALVES INDEX

Executions			
Version	Symbol	Code	Item
1/4" ports	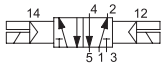	035221	AE18142520
EXTERNAL AIR PILOT			
1/4" ports	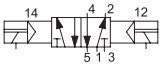	035231	AE18142520K



Note: The fixing screws for mounting on sub-base are included in the base kit.
The maximum torque of the fixing screw of the coil must not exceed 1Nm.

type: **AE18142520**
AE18142520K

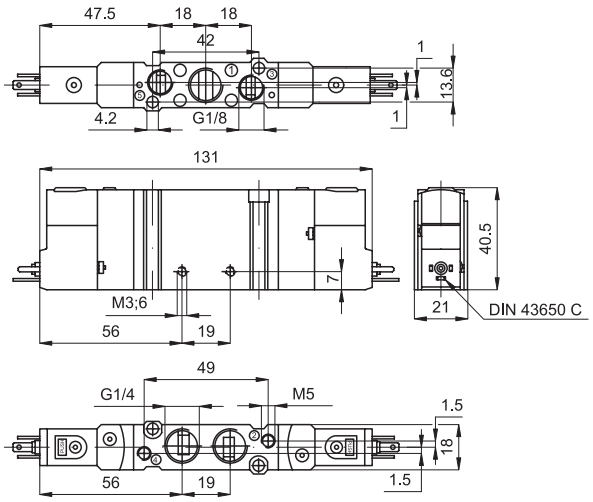

Series of spool valves with reduced dimensions and low electrical consumption, thanks to which they can be operated directly by electronic systems.
The ports are available in various configurations for mounting on base or single use; in case of single use the relevant fixing plate must be applied.
Coils and connectors are to be ordered separately.

For the fixing plate type PF 1518 see page 2.20.1.
For the coils type ASA 18.. see page 2.200.1.
For the connectors type A05207.. see page 2.210.1.
For the sub-bases type SB18.. see page 2.40.1.

In the external air pilot versions the ports for external piloting are M5.

The exhausts are 1/8".

Technical data		
Fluid	Compressed filtered air with or without lubrication. Lubrication, if be used, must be continous.	
Pressure range	2 ÷ 8 bar	With external air pilot: 0 ÷ 8 bar
Temperature range	-5 °C ÷ + 50°C	
Orifice	8 mm	
Flow	1200 Nl/min	
Manual override	Single stable position, flat	
Response time	Energising: 24 ms	
Mounting	In any position	
Materials	Body:	Die-cast aluminium
	Heads:	Acetal resin
	Seals:	Nitrile rubber (NBR)

Executions			
Version	Symbol	Code	Item
1/4” ports, with closed centres	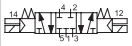	035241	AE1814253C
1/4” ports, with open centres		035244	AE1814253A
1/4” ports, with pressurised centres		035247	AE1814253P
EXTERNAL AIR PILOT			
1/4” ports, with closed centres	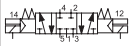	035251	AE1814253CK
1/4” ports, with open centres	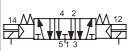	035254	AE1814253AK
1/4” ports, with pressurised centres	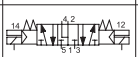	035257	AE1814253PK

Note: The fixing screws for mounting on sub-base are included in the base kit.
The maximum torque of the fixing screw of the coil must not exceed 1Nm.



type: **AE1814253...**

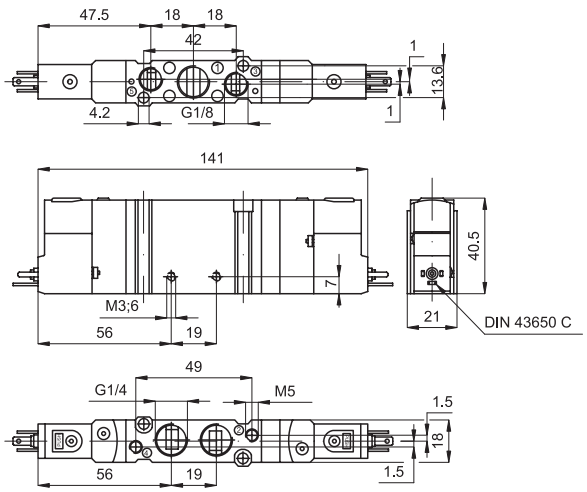

Series of spool valves with reduced dimensions and low electrical consumption, thanks to which they can be operated directly by electronic systems.
The ports are available in various configurations for mounting on base or single use; in case of single use the relevant fixing plate must be applied.
Coils and connectors are to be ordered separately.

For the fixing plate type PF 1518 see page 2.20.1.
For the coils type ASA 18.. see page 2.200.1.
For the connectors type A05207.. see page 2.210.1.
For the sub-bases type SB18.. see page 2.40.1.

In the external air pilot versions the ports for external piloting are M5.

The exhausts are 1/8”.

Technical data		
Fluid	Compressed filtered air with or without lubrication. Lubrication, if be used, must be continous.	
Pressure range	3 ÷ 8 bar	With external air pilot: 0 ÷ 8 bar
Temperature range	-5 °C ÷ + 50°C	
Orifice	8 mm	
Flow	700 Nl/min	
Manual override	Single stable position, flat	
Response time	Energising: 24 ms	De-energising: 35 ms
Mounting	In any position	
Materials	Body: Die-cast aluminium Heads: Acetal resin Seals: Nitrile rubber (NBR)	

Executions			
Version	Symbol	Code	Item
1/4" ports, single stable position	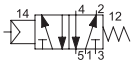	035261	AP18141520
1/4" ports, two stable positions		035271	AP18142520
1/4" ports, two stable positions, differential		035281	AP18142521

Note: The fixing screws for mounting on sub-base are included in the base kit.



type: **AP1814...**

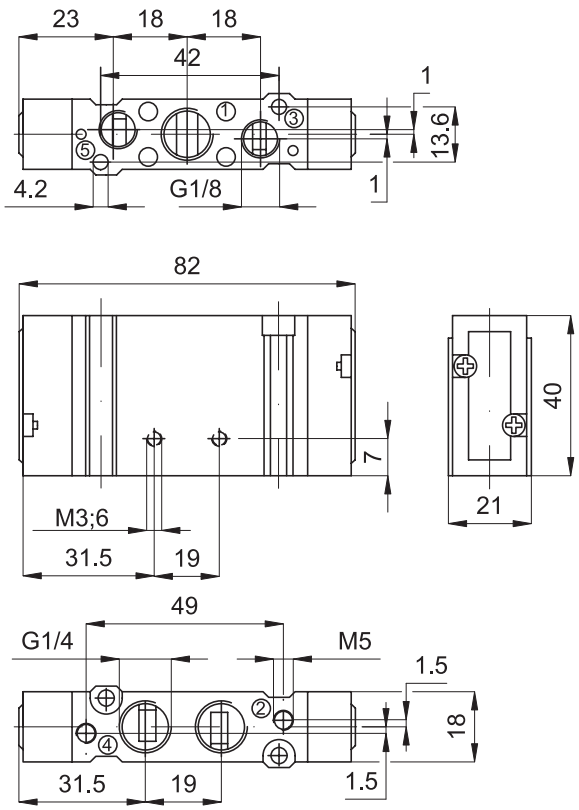

Series of spool valves with reduced dimensions.
The ports are available in various configurations for mounting on base or single use; in case of single use the relevant fixing plate must be applied.

For the fixing plate type PF 1518 see page 2.20.1.
For the sub-bases type SB18.. see page 2.40.1.

The air piloting ports are M5 threaded.

The exhausts are 1/8".

Technical data		
Fluid	Compressed filtered air with or without lubrication. Lubrication, if be used, must be continous.	
Pressure range	2 ÷ 8 bar	
Temperature range	-5 °C ÷ + 50°C	
Orifice	8 mm	
Flow	1200 Nl/min	
Mounting	In any position	
Materials	Body:	Die-cast aluminium
	Heads:	Acetal resin
	Seals:	Nitrile rubber (NBR)

Executions			
Version	Symbol	Code	Item
1/4" ports, with closed centres	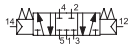	035291	AP1814253C
1/4" ports, with open centres	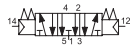	035301	AP1814253A
1/4" ports, with pressurised centres	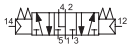	035311	AP1814253P

Note: The fixing screws for mounting on sub-base are included in the base kit.



type: **AP1814253...**

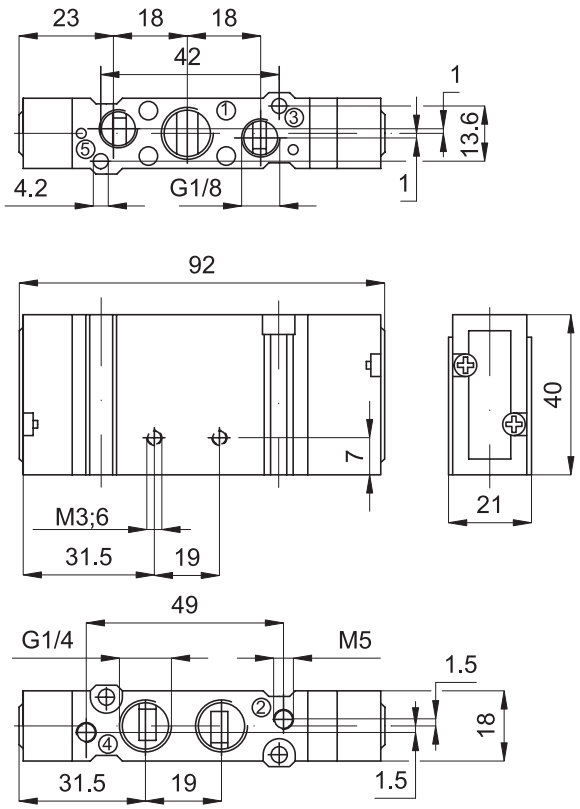

Series of spool valves with reduced dimensions.
The ports are available in various configurations for mounting on base or single use; in case of single use the relevant fixing plate must be applied.

For the fixing plate type PF 1518 see page 2.20.1.
For the sub-bases type SB18.. see page 2.40.1.

The air piloting ports are M5 threaded.

The exhausts are 1/8".

Technical data		
Fluid	Compressed filtered air with or without lubrication. Lubrication, if be used, must be continous.	
Pressure range	2 ÷ 8 bar	
Temperature range	-5 °C ÷ + 50°C	
Orifice	8 mm	
Flow	700 Nl/min	
Mounting	In any position	
Materials	Body:	Die-cast aluminium
	Heads:	Acetal resin
	Seals:	Nitrile rubber (NBR)

Executions			
Version	Symbol	Code	Item
Intermediate sub-base		035321	SB18A
Intermediate blank sub-base		035322	SB18C
End plate kit one inlet and one blank		035323	SB18CA
Ported end plates (2 off)		035324	SB18AA
Manifold blanking plate		035325	SB18T
Mounting bracket for single valve		035151	PF1518
Interface for sub-base from size 15 to 18 mm		035157	SB1518

The blank intermediate sub-base can be used to separate 2 inlets at different pressures on the same manifold.

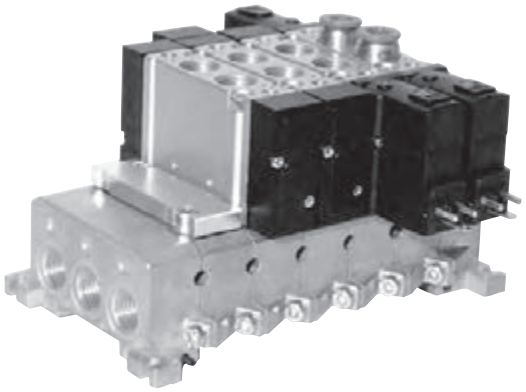

Materials:	Die-cast aluminium Seals: Nitrile rubber (NBR) Screws: Zinc plated steel

The intermediate sub-base kit includes:
2 screws and 1 seal for mounting the valve
2 screws and 1 seal for assembling the manifold.
The end plate kit includes:
2 screws and 1 seal for assembling the manifold.
The interface kit includes:
2 screws and 1 seal for assembling the manifold.

type: **SB18A**
SB18C

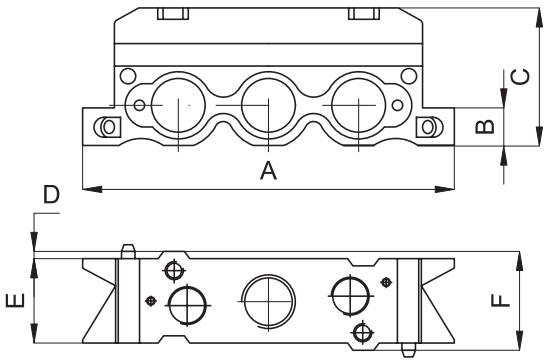

A	B	C	D	E	F
82	8,5	30	1,1	16	18,2

type: **SB1518**

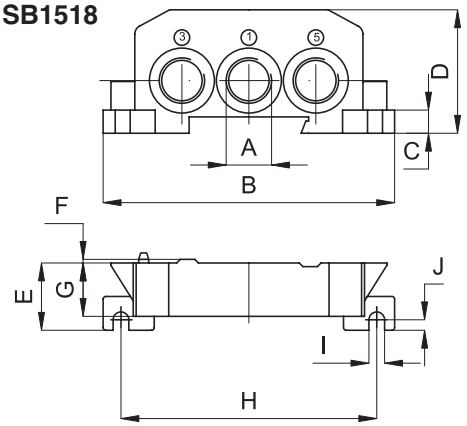

A	B	C	D	E	F	G	H	I	J
1/4"	87	7	37	20	1,1	16	75	4,5	3

type: **SB15CA**
SB15AA

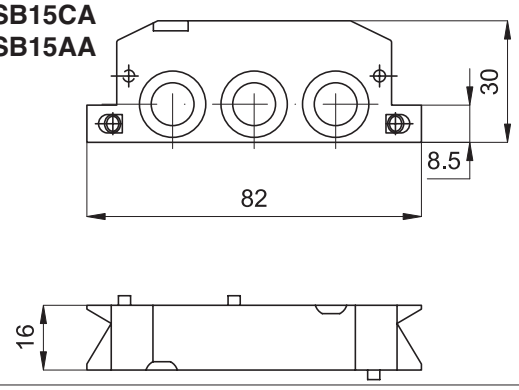

type: **PF1518**

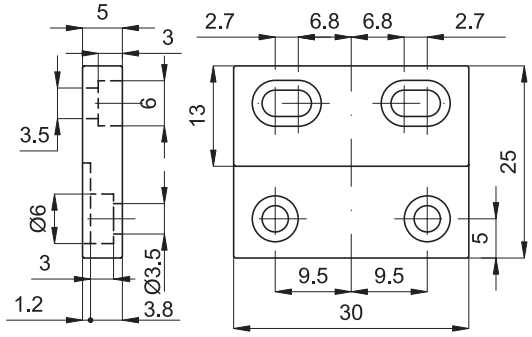

Overall dimensions for manifold with valves mounted

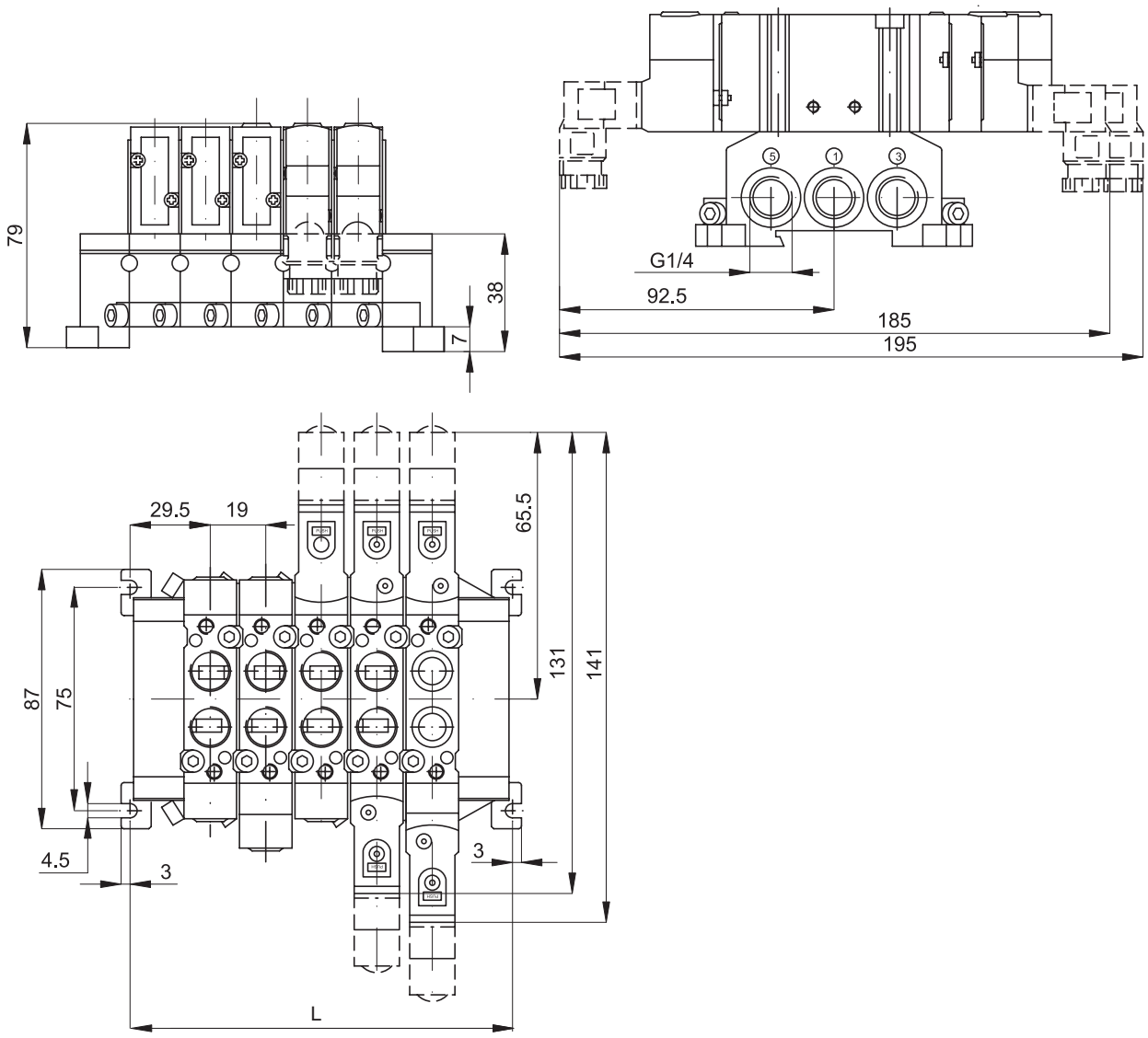

Positions	2	3	4	5	6	7	8	9	10	11	12	13	14	15	16	17	18	19	20
L	78	97	116	135	154	173	192	211	230	249	268	287	306	325	344	363	382	401	420

Executions

Version	Symbol	Code	Item
3/2 NC	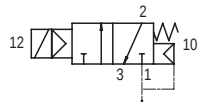	034003	A1E130
3/2 NO	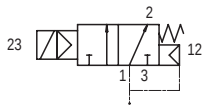	034004	A1E131
3/2 solenoid/solenoid	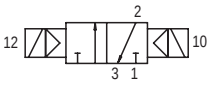	034005	A1E132
3/2 NC external air pilot	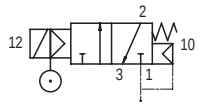	034006	A1K130
3/2 solenoid/solenoi, external air pilot	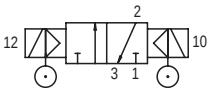	034007	A1K132

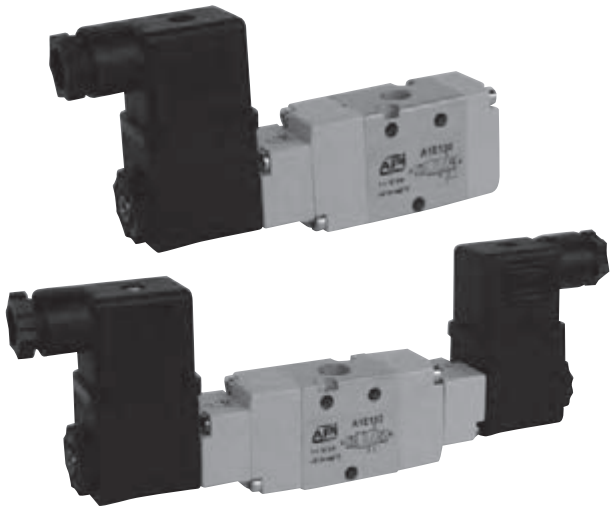

Series of spool valves, with static seals, high flow, for panel or sub-base mounting.
Coils and connectors are to be ordered separately.

For the coils type ASA12... see page 2.200.1
For the connectors type A122... see page 2.210.20
For the sub-bases type A1B1... see page 2.65.1

On request, they can be supplied according Directive 94/9/EC - **ATEX**
CE Ex II 2 GDc T5

Code key

Series	Actuation	Size	Function
A1	E = electrical K = electrical with external air pilot	1 = 1/8" 2 = 1/4	30 = 3/2 NC 31 = 3/2 NO 32 = 3/2 solenoid/solenoid 50 = 5/2 solenoid/spring 51 = 5/2 solenoid/solenoid 70 = 5/3 CC 71 = 5/3 CO 72 = 5/3 CP

Technical data

Fluid	Compressed filtered air with or without lubrication. Lubrication, if be used, must be continous.	
Pressure range	1 ÷ 10 bar	
Temperature range	-10°C ÷ +60°C	
Orifice	6,5 mm	
Flow	650 Nl/min at 6 bar with ΔP 1 bar	
Minimum piloting pressure	1,5 bar	Minimum external air pressure: 1,5 bar
Mounting	In any position	
Manual override	Two stable positions	
Response time	Energising:	De-energising:
Materials	Body: Aluminium Heads: Plastic Spool: Chemical nickel plated aluminium Distancers: Plastic Seals: Nitrile rubber (NBR)	

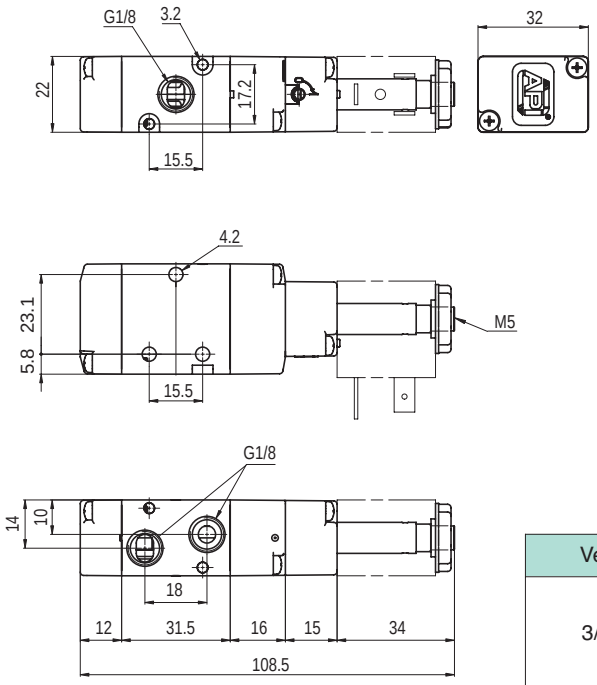

Version	Symbol	Code	Item
3/2 NC	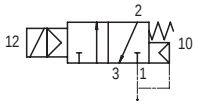	034003	A1E130
3/2 NO	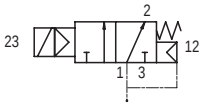	034004	A1E131

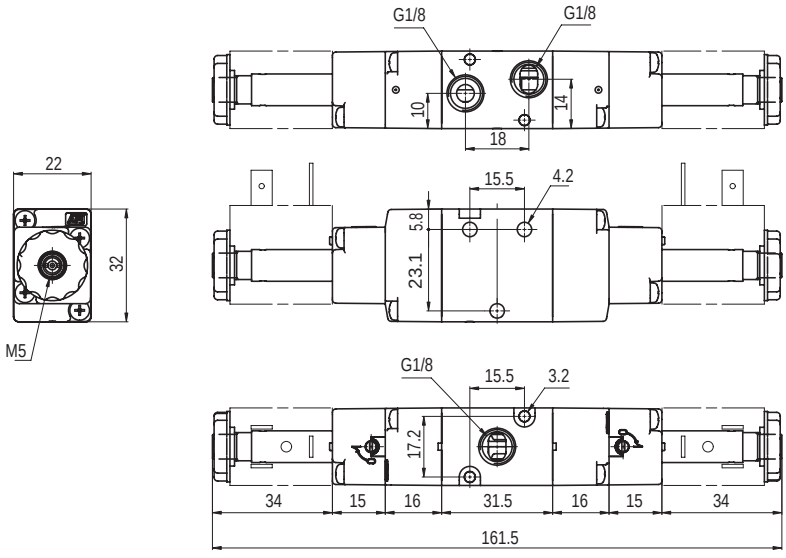

Version	Symbol	Code	Item
3/2 solenoid/solenoid	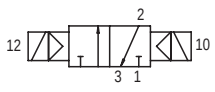	034005	A1E132

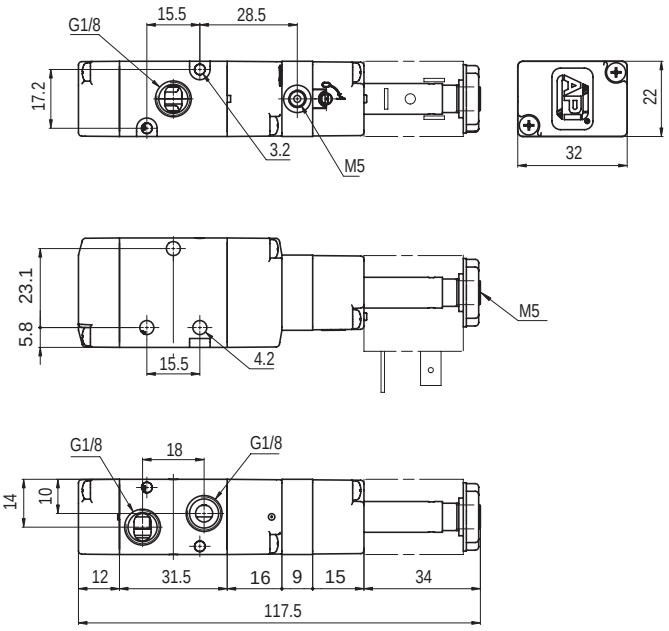

Version	Symbol	Code	Item
3/2 NC external air pilot	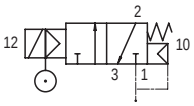	034006	A1K130

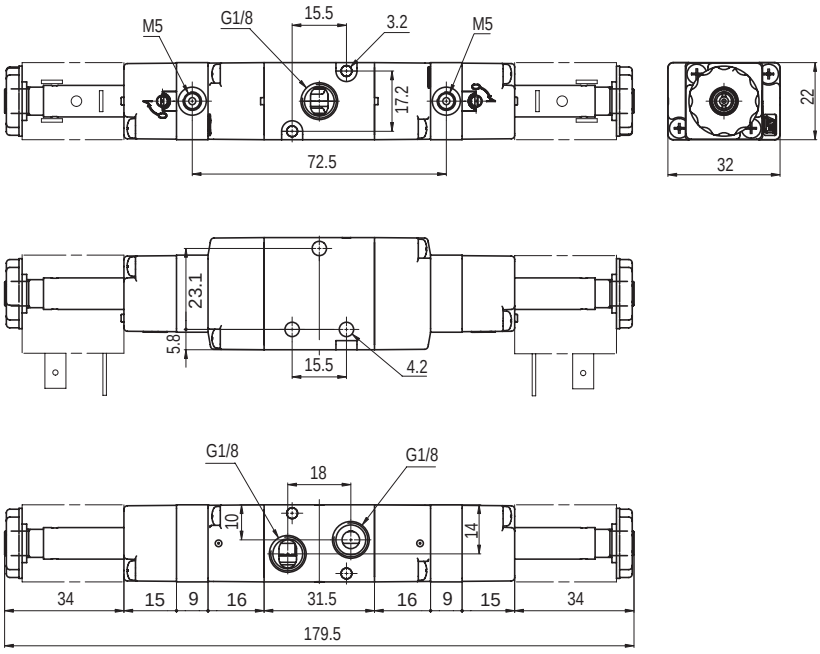

Version	Symbol	Code	Item
3/2 solenoid/solenoid, external air pilot	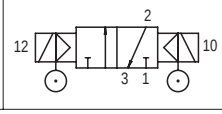	034007	A1K132

Valves series A1

1/8”, 5/2 - 5/3, electrically operated

Executions

Version	Symbol	Code	Item
5/2 solenoid/spring	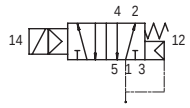	034011	A1E150
5/2 solenoid/solenoid	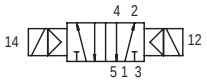	034021	A1E151
5/3 with closed centres	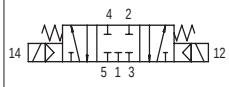	034031	A1E170
5/3 with open centres	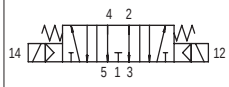	034033	A1E171
5/3 with pressurised centres		034032	A1E172
5/2 solenoid/spring, external air pilot	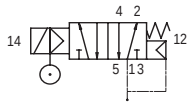	034012	A1K150
5/2 solenoid/solenoid, external air pilot	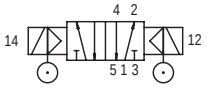	034008	A1K151
5/3 with closed centres, external air pilot	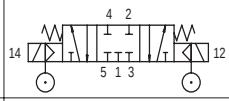	034009	A1K170
5/3 with open centres, external air pilot	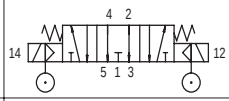	034010	A1K171
5/3 with pressurised centres, external air pilot	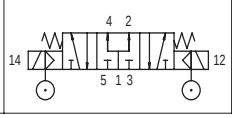	034013	A1K172

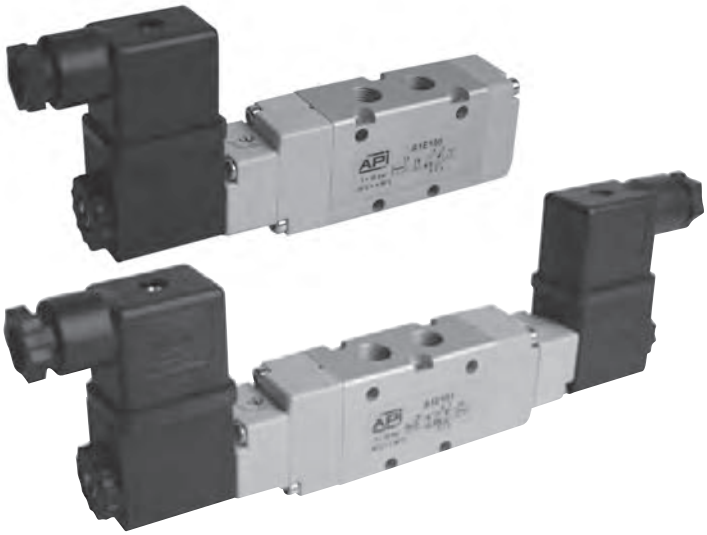

Series of spool valves, with static seals, high flow, for panel or sub-base mounting.
Coils and connectors are to be ordered separately.

For the coils type ASA12... see page 2.200.1
For the connectors type A122... see page 2.210.20
For the sub-bases type A1B1... see page 2.65.1

Code key

Series	Actuation	Size	Function
A1	E = electrical K = elettrical with external air pilot	1 = 1/8” 2 = 1/4”	30 = 3/2 NC 31 = 3/2 NO 32 = 3/2 solenoid/solenoid 50 = 5/2 solenoid/spring 51 = 5/2 solenoid/solenoid 70 = 5/3 CC 71 = 5/3 CO 72 = 5/3 CP

On request, they can be supplied according Directive 94/9/EC - **ATEX**
CE Ex II 2 GDc T5

Technical data

Fluid	Compressed filtered air with or without lubrication. Lubrication, if be used, must be continous.	
Pressure range	1 ÷ 10 bar	5/3 = 2,5 ÷ 10 bar
Temperature range	-10°C ÷ +60°C	
Orifice	6,5 mm	
Flow	650 Nl/min at 6 bar with ΔP 1 bar	
Minimum piloting pressure	1,5 bar	Minimum external air pressure: 1,5 bar
Mounting	In any position	
Manual override	Two stable positions	
Response time	Energising:	De-energising:
Materials	Body: Aluminium Heads: Plastic Spool: Chemical nickel plated aluminium Distancers: Plastic Seals: Nitrile rubber (NBR)	

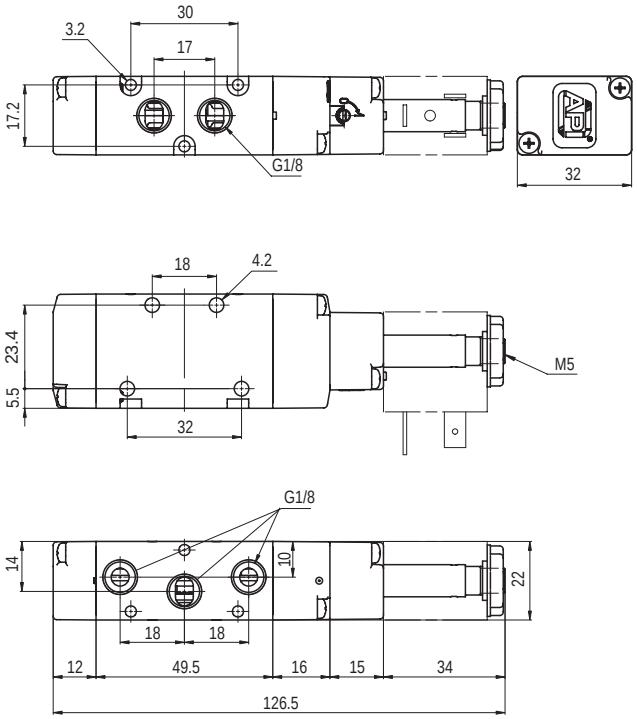

Version	Symbol	Code	Item
5/2 solenoid/spring	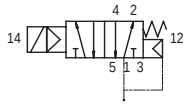	034011	A1E150

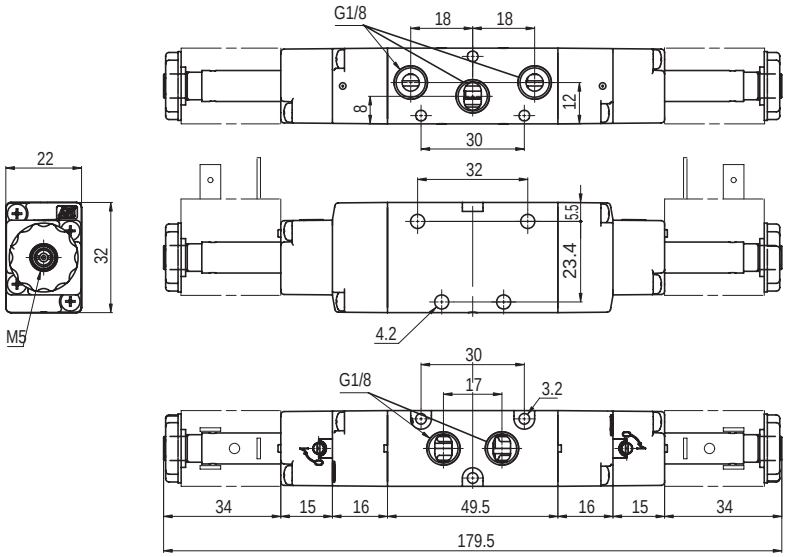

Version	Symbol	Code	Item
5/2 solenoid/solenoid	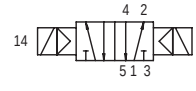	034021	A1E151

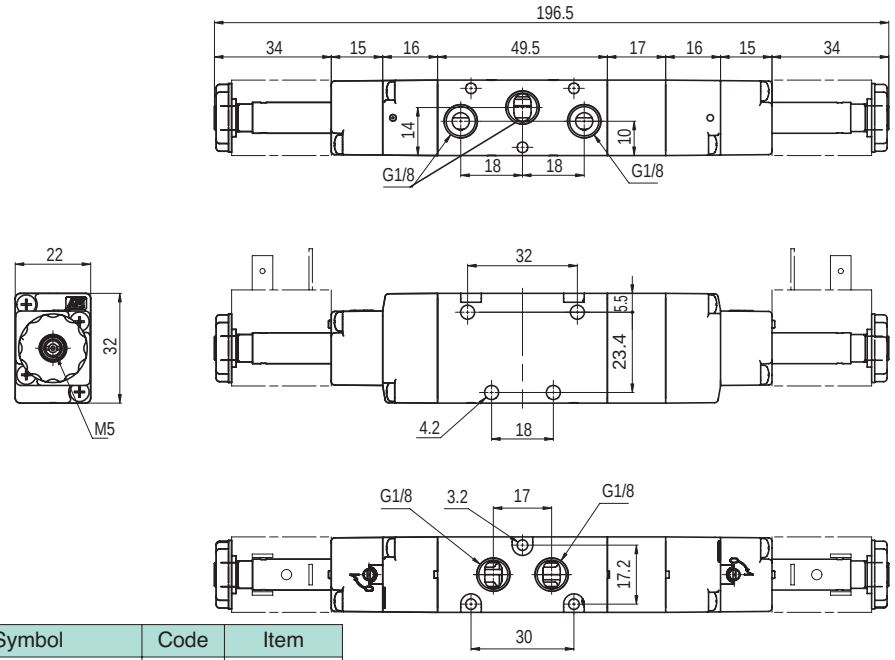

Version	Symbol	Code	Item
5/3 with closed centres	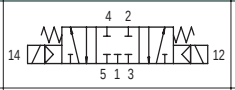	034031	A1E170
5/3 with open centres	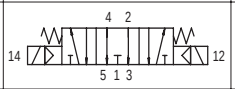	034033	A1E171
5/3 with pressurised centres	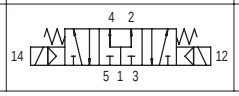	034032	A1E172

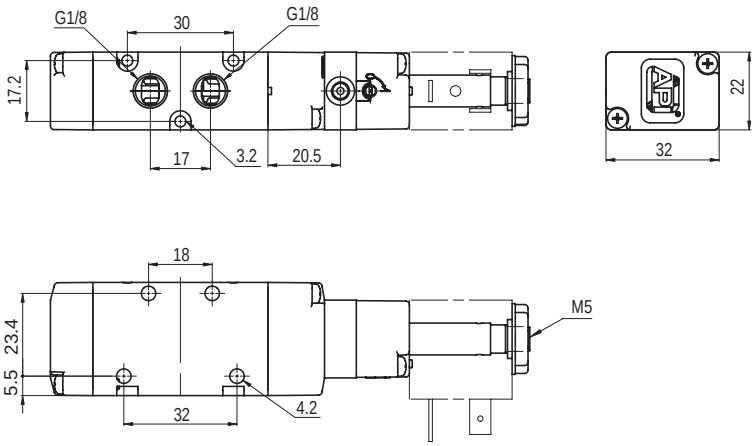

Version	Symbol	Code	Item
5/2 solenoid/spring, external air pilot	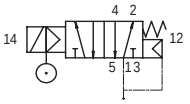	034012	A1K150

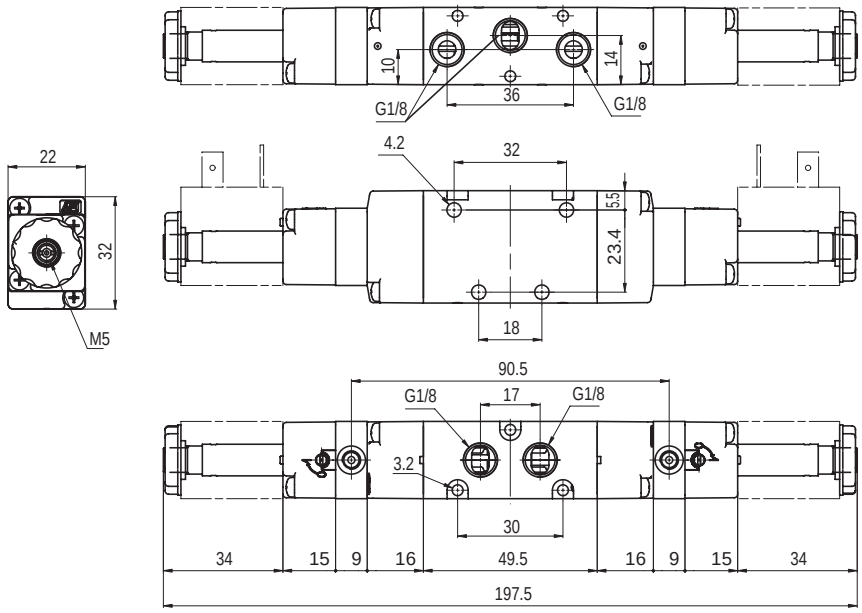

Version	Symbol	Code	Item
5/2 solenoid/solenoid, external air pilot	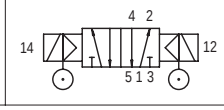	034008	A1K151

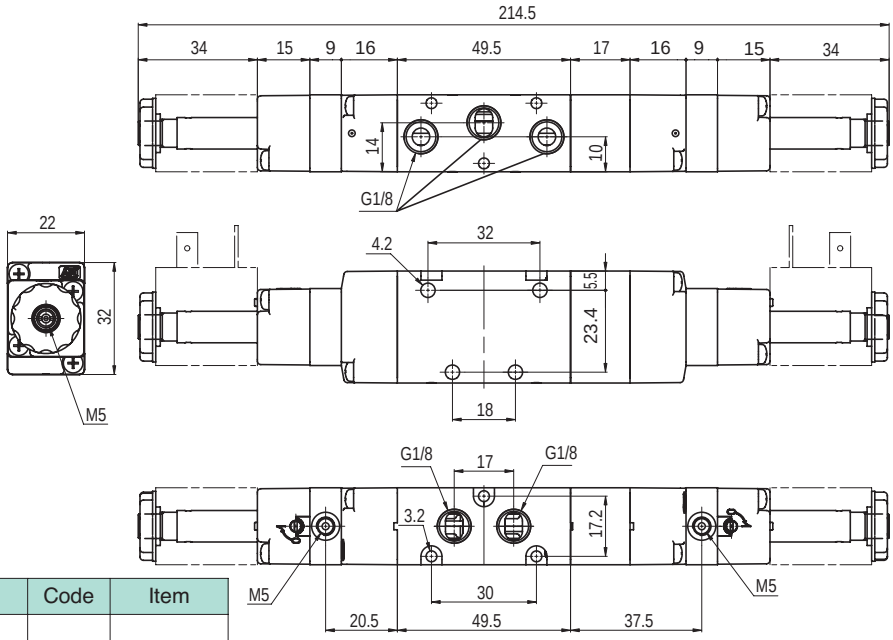

Version	Symbol	Code	Item
5/3 with closed centres, external air pilot	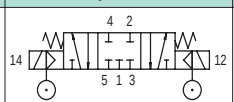	034009	A1K170
5/3 with open centres, external air pilot	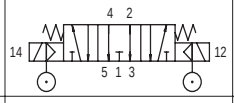	034010	A1K171
5/3 with pressurised centres, external air pilot	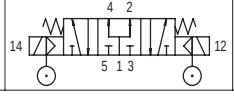	034013	A1K172

Valves series A1

1/8”, 3/2, pneumatically operated

Executions			
Version	Symbol	Code	Item
3/2 NC	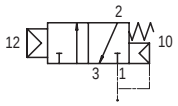	034014	A1P130
3/2 NO	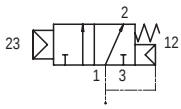	034015	A1P131
3/2 pilot/pilot	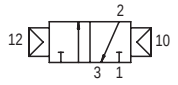	034016	A1P132
3/2 pilot/pilot, differential	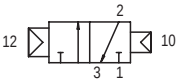	034017	A1P133



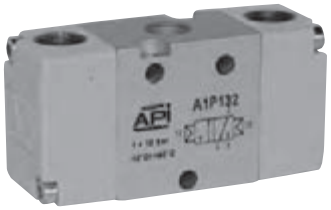

Series of spool valves, with static seals, high flow, for panel or sub-base mounting.
For the sub-bases type A1B1... see page.2.65.1

On request, they can be supplied according Directive 94/9/EC - **ATEX**
II 2 GDc T5

Code key

Series	Actuation	Size	Function
A1	P = pneumatic	1 = 1/8” 2 = 1/4”	30 = 3/2 NC 31 = 3/2 NO 32 = 3/2 pilot/pilot 33 = 3/2 pilot/pilot, differential 50 = 5/2 pilot/spring 51 = 5/2 pilot/pilot 52 = 5/2 pilot/pilot, differential 70 = 5/3 CC 71 = 5/3 CO 72 = 5/3 CP

Technical data		
Fluid	Compressed filtered air with or without lubrication. Lubrication, if be used, must be continous.	
Pressure range	1 ÷ 10 bar	
Temperature range	-10°C ÷ +60°C	
Orifice	6,5 mm	
Flow	650 Nl/min at 6 bar with ΔP 1 bar	
Minimum piloting pressure	1,5 bar	
Mounting	In any position	
Response time	Energising:	De-energising:
Materials	Body: Aluminium Heads: Plastic Spool: Chemical nickel plated aluminium Distancers: Plastic Seals: Nitrile rubber (NBR)	

GENERAL INDEX VALVES INDEX

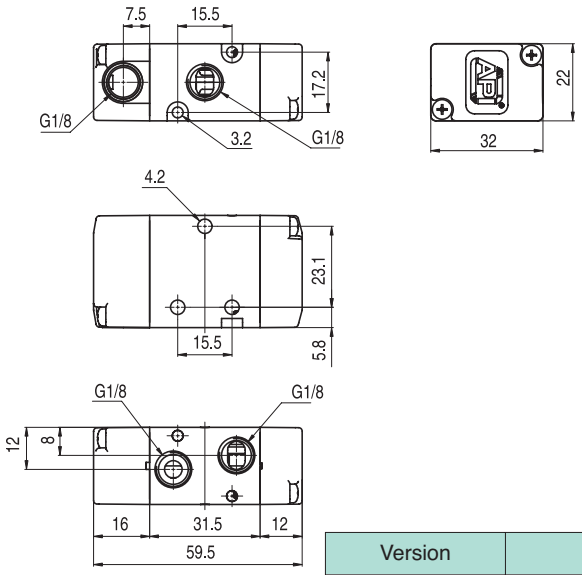

Version	Symbol	Code	Item
3/2 NC	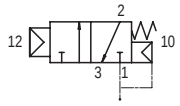	034014	A1P130
3/2 NO	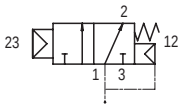	034015	A1P131

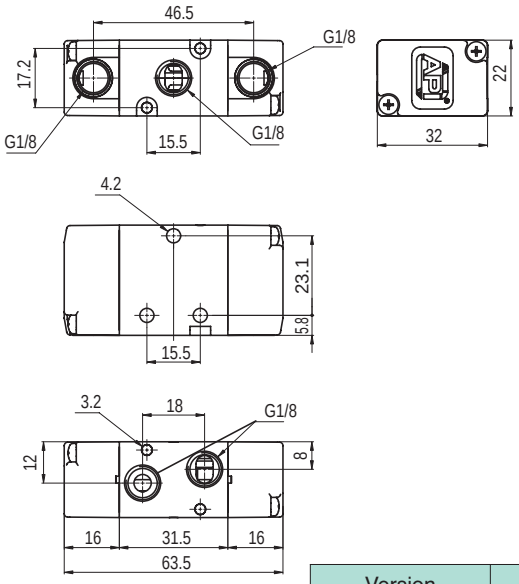

Version	Symbol	Code	Item
3/2 pilot/pilot	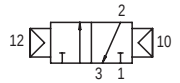	034016	A1P132
3/2 pilot/pilot, differential	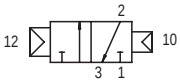	034017	A1P133

Executions			
Version	Symbol	Code	Item
5/2 pilot/spring	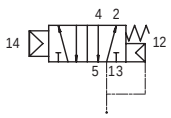	034001	A1P150
5/2 pilot/pilot	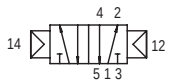	034002	A1P151
5/2 pilot/pilot, differential	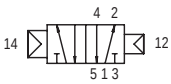	034018	A1P152
5/3 with closed centres	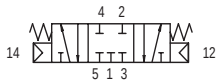	034019	A1P170
5/3 with open centres	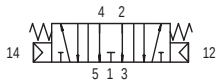	034020	A1P171
5/3 with pressurised centres	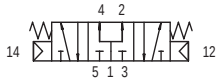	034022	A1P172



Series of spool valves, with static seals, high flow, for panel or sub-base mounting.
For the sub-bases type A1B1... see page 2.65.1

On request, they can be supplied according Directive 94/9/EC - **ATEX**
CE Ex **II 2 GDc T5**

Code key

Series	Actuation	Size	Function
A1	P = pneumatic	1 = 1/8” 2 = 1/4”	30 = 3/2 NC 31 = 3/2 NO 32 = 3/2 pilot/pilot 33 = 3/2 pilot/pilot, differential 50 = 5/2 pilot/spring 51 = 5/2 pilot/pilot 52 = 5/2 pilot/pilot, differential 70 = 5/3 CC 71 = 5/3 CO 72 = 5/3 CP

Technical data		
Fluid	Compressed filtered air with or without lubrication. Lubrication, if be used, must be continous.	
Pressure range	1 ÷ 10 bar	5/3 = 2,5 ÷ 10 bar
Temperature range	-10°C ÷ +60°C	
Orifice	6,5 mm	
Flow	650 Nl/min at 6 bar with ΔP 1 bar	
Minimum piloting pressure	1,5 bar	
Mounting	In any position	
Response time	Energising:	De-energising:
Materials	Body: Aluminium Heads: Plastic Spool: Chemical nickel plated aluminium Distancers: Plastic Seals: Nitrile rubber (NBR)	

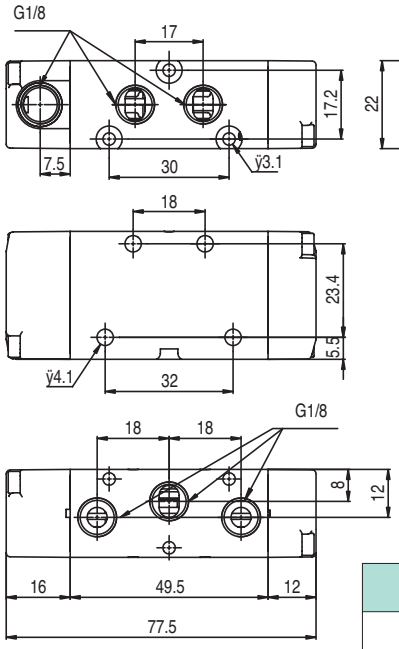

Version	Symbol	Code	Item
5/2 pilot/spring	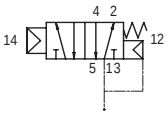	034001	A1P150

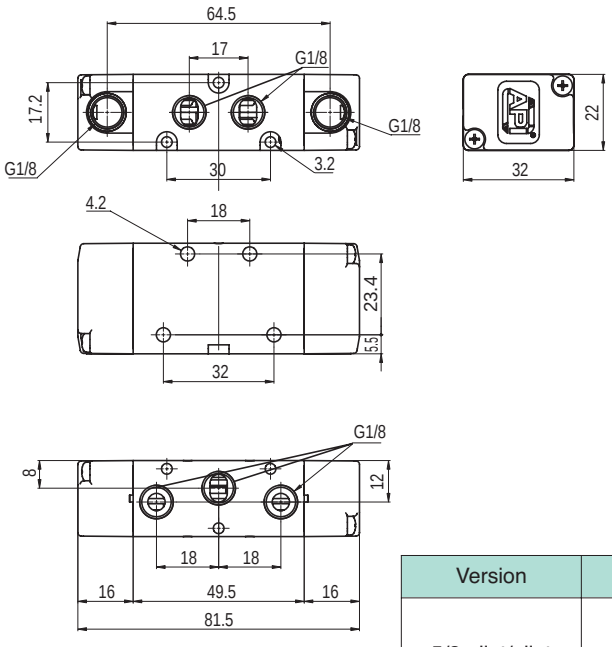

Version	Symbol	Code	Item
5/2 pilot/pilot	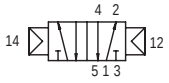	034002	A1P151
5/2 pilot/pilot, differential	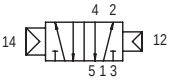	034018	A1P152

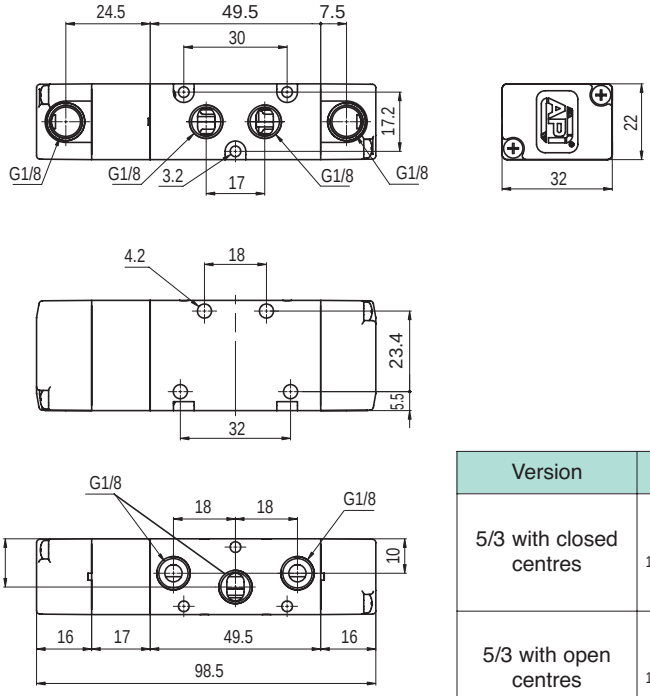

Version	Symbol	Code	Item
5/3 with closed centres	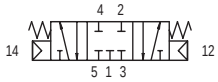	034019	A1P170
5/3 with open centres	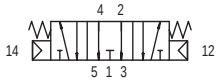	034020	A1P171
5/3 with pressurised centres	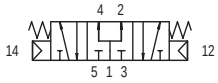	034022	A1P172

Executions		
Version	Code	Item
2 positions	034041	A1B102
3 positions	034042	A1B103
4 positions	034043	A1B104
5 positions	034044	A1B105
6 positions	034045	A1B106
7 positions	034046	A1B107
8 positions	034047	A1B108
9 positions	034048	A1B109
10 positions	034049	A1B110
blanking plate	034050	A1C1
plug	034051	A1T1

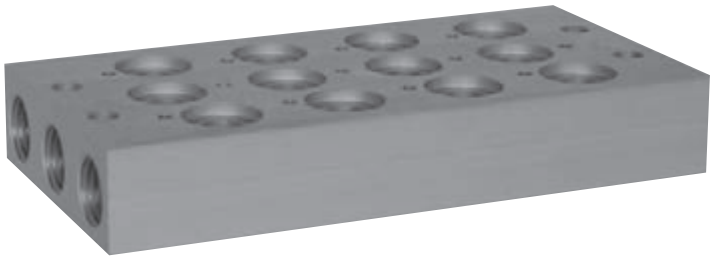

Multi-position sub-bases with fixed position, for valves series A1, 3 and 5 ways. 2 fixing screws for each position and the relevant seals are included in the base kit.
Spare positions can be blanked with plate.

Material:	Profiled anodised aluminium

On request, they can be supplied according Directive 94/9/EC - **ATEX**
CE Ex **II 2 GDc T5**

Code key

Series	Product	Size	N° positions
A1	B = base C = blanking plate T = plug	1 = 1/8" 2 = 1/4"	from 02 to 10

Plug

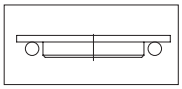

Blanking plate

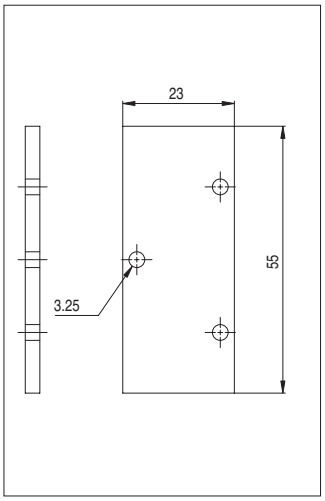

Multi-position sub-base

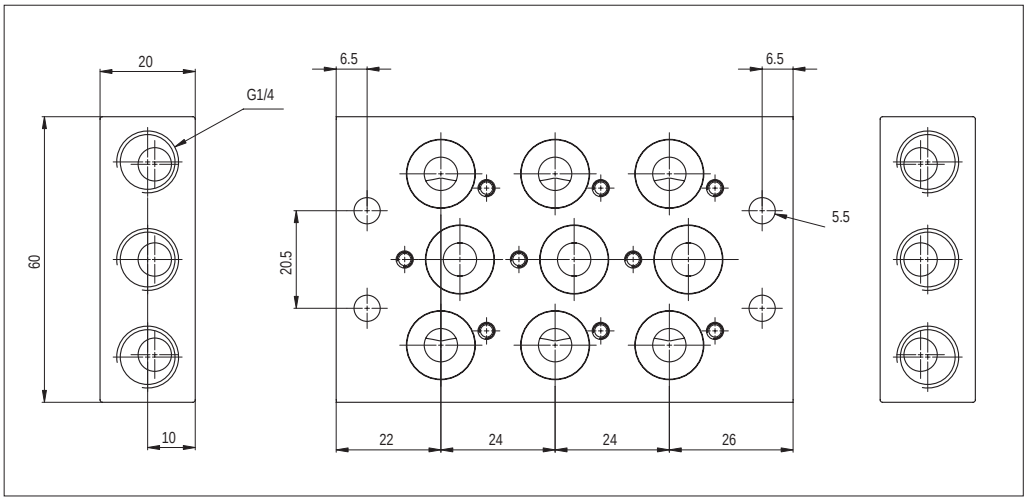

Valves series A1

1/4", 3/2, electrically operated

Executions

Version	Symbol	Code	Item
3/2 NC	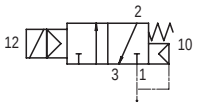	034025	A1E230
3/2 NO	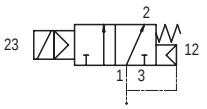	034040	A1E231
3/2 solenoid/solenoid	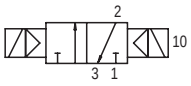	034024	A1E232
3/2 NC external air pilot	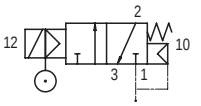	034039	A1K230
3/2 solenoid/solenoid, external air pilot	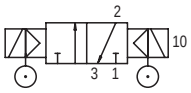	034023	A1K232

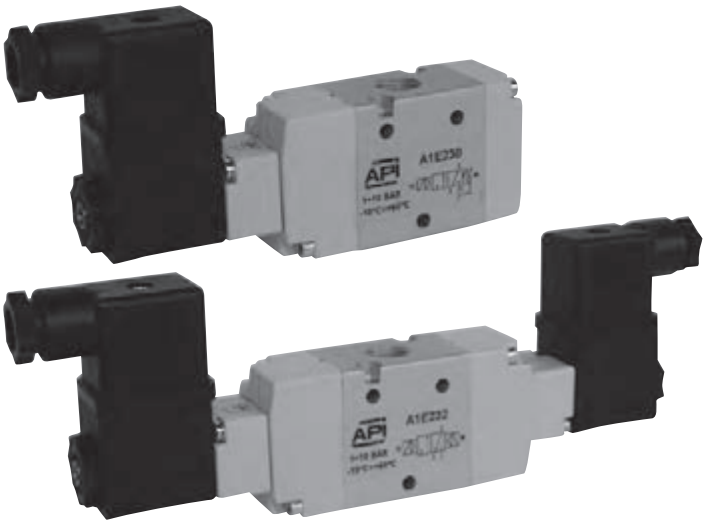

Series of spool valves, with static seals, high flow, for panel or sub-base mounting.
Coils and connectors are to be ordered separately.

For the coils type ASA12... see page 2.200.1
For the connectors type A122... see page 2.210.20
For the sub-bases type A1B2... see page 2.85.1

On request, they can be supplied according Directive 94/9/EC - **ATEX**
CE Ex **II 2 GDc T5**

Code key

Series	Actuation	Size	Function
A1	E = electrical K = electrical with external air pilot	1 = 1/8" 2 = 1/4	30 = 3/2 NC 31 = 3/2 NO 32 = 3/2 solenoid/solenoid 50 = 5/2 solenoid/spring 51 = 5/2 solenoid/solenoid 70 = 5/3 CC 71 = 5/3 CO 72 = 5/3 CP

Technical data

Fluid	Compressed filtered air with or without lubrication. Lubrication, if be used, must be continous.	
Pressure range	1 ÷ 10 bar	
Temperature range	-10°C ÷ +60°C	
Orifice	8 mm	
Flow	1.100 Nl/min at 6 bar with ΔP 1 bar	
Minimum piloting pressure	1,5 bar	Minimum external air pressure: 1,5 bar
Mounting	In any position	
Manual override	Two stable positions	
Response time	Energising:	De-energising:
Materials	Body: Aluminium Heads: Plastic Spool: Chemical nickel plated aluminium Distancers: Plastic Seals: Nitrile rubber (NBR)	

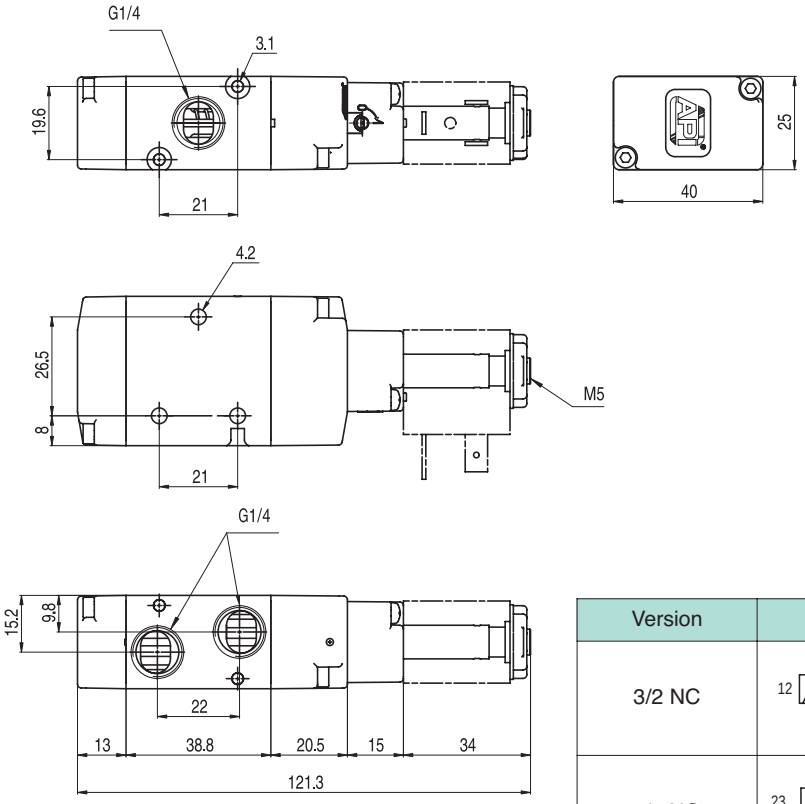

Version	Symbol	Code	Item
3/2 NC	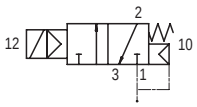	034025	A1E230
3/2 NO	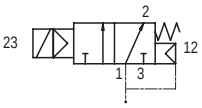	034040	A1E231

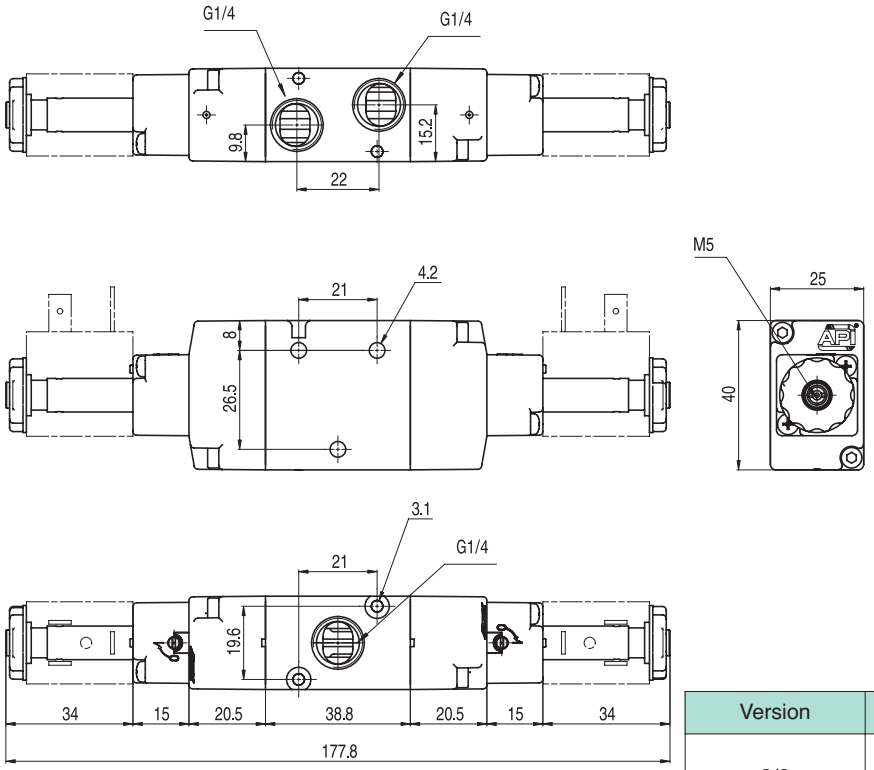

Version	Symbol	Code	Item
3/2 solenoid/solenoid	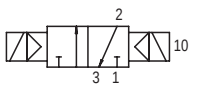	034024	A1E232

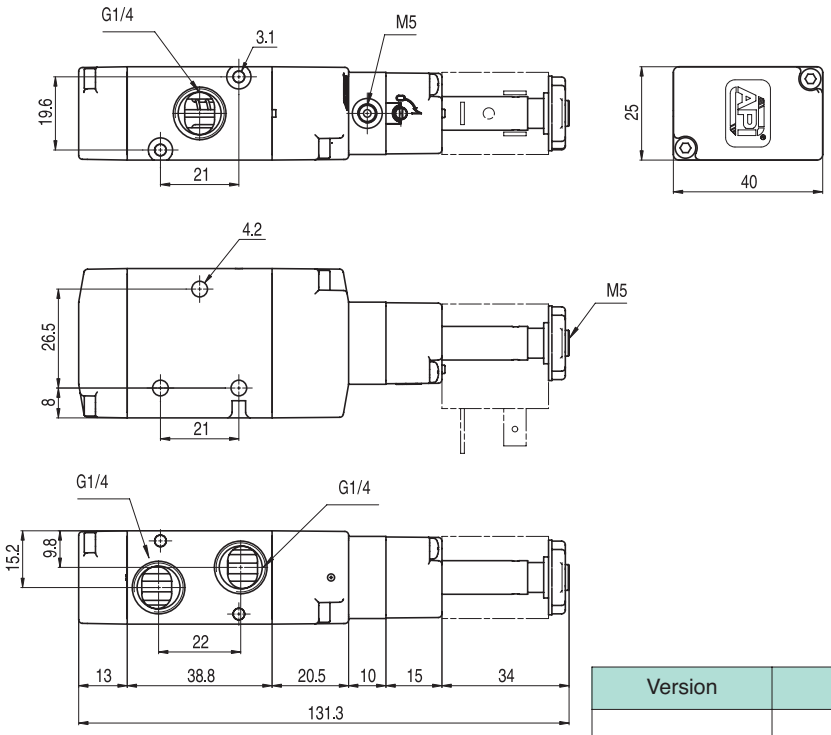

Version	Symbol	Code	Item
3/2 NC external air pilot	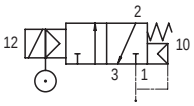	034039	A1K230

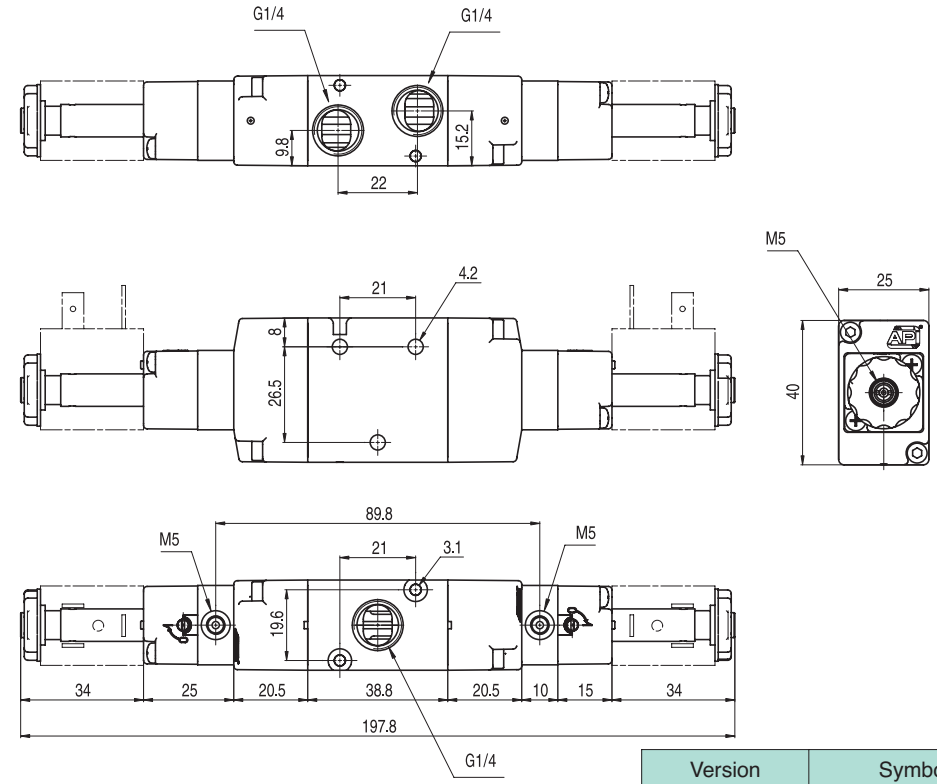

Version	Symbol	Code	Item
3/2 solenoid/solenoid, external air pilot	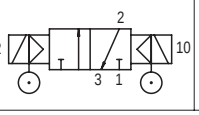	034023	A1K232

Executions

Version	Symbol	Code	Item
5/2 solenoid/spring	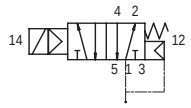	034111	A1E250
5/2 solenoid/solenoid	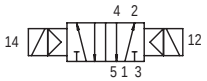	034121	A1E251
5/3 with closed centres	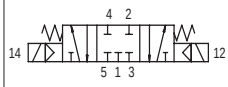	034131	A1E270
5/3 with open centres	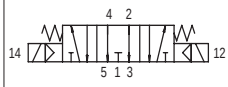	034133	A1E271
5/3 with pressurised centres		034132	A1E272
5/2 solenoid/spring, external air pilot	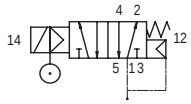	034035	A1K250
5/2 solenoid/solenoid, external air pilot	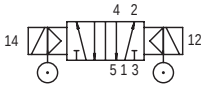	034034	A1K251
5/3 with closed centres, external air pilot	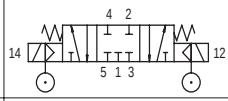	034037	A1K270
5/3 with open centres, external air pilot	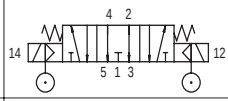	034038	A1K271
5/3 with pressurised centres, external air pilot	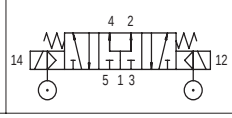	034036	A1K272



Series of spool valves, with static seals, high flow, for panel or sub-base mounting.
Coils and connectors are to be ordered separately.

For the coils type ASA12... see page 2.200.1
For the connectors type A122... see page 2.210.20
For the sub-bases type A1B2... see page 2.85.1

Code key

Series	Actuation	Size	Function
A1	E = electrical K = elettrical with external air pilot	1 = 1/8" 2 = 1/4"	30 = 3/2 NC 31 = 3/2 NO 32 = 3/2 solenoid/solenoid 50 = 5/2 solenoid/spring 51 = 5/2 solenoid/solenoid 70 = 5/3 CC 71 = 5/3 CO 72 = 5/3 CP

On request, they can be supplied according Directive 94/9/EC - **ATEX**
CE Ex **II 2 GDc T5**

Technical data

Fluid	Compressed filtered air with or without lubrication. Lubrication, if be used, must be continous.	
Pressure range	1 ÷ 10 bar	5/3 = 2,5 ÷ 10 bar
Temperature range	-10°C ÷ +60°C	
Orifice	8 mm	
Flow	1.100 Nl/min at 6 bar with ΔP 1 bar	
Minimum piloting pressure	1,5 bar	Minimum external air pressure: 1,5 bar
Mounting	In any position	
Manual override	Two stable positions	
Response time	Energising:	De-energising:
Materials	Body: Aluminium Heads: Plastic Spool: Chemical nickel plated aluminium Distancers: Plastic Seals: Nitrile rubber (NBR)	

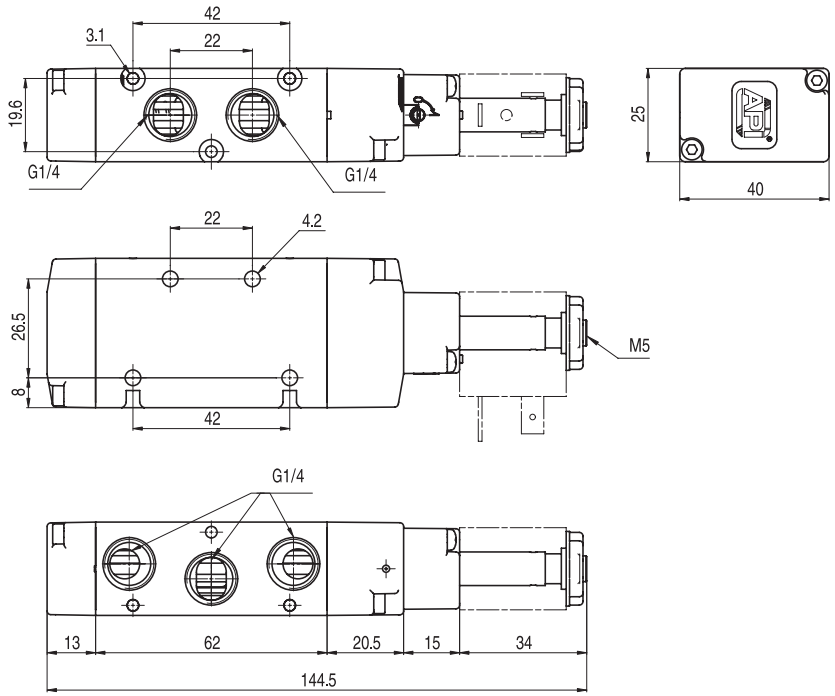

Version	Symbol	Code	Item
5/2 solenoid/spring	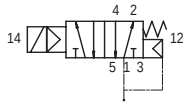	034111	A1E250

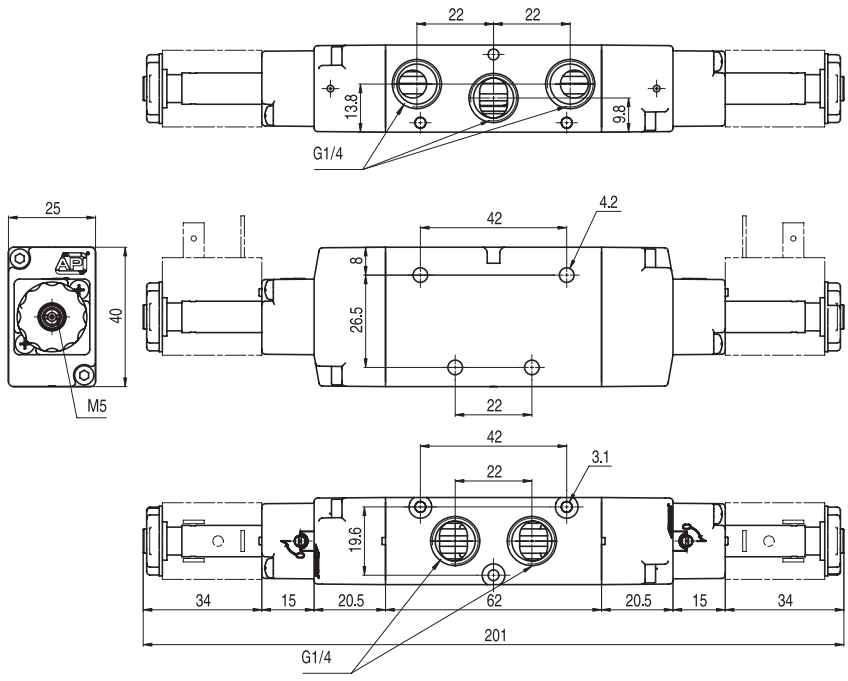

Version	Symbol	Code	Item
5/2 solenoid/solenoid	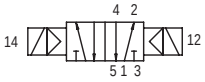	034121	A1E251

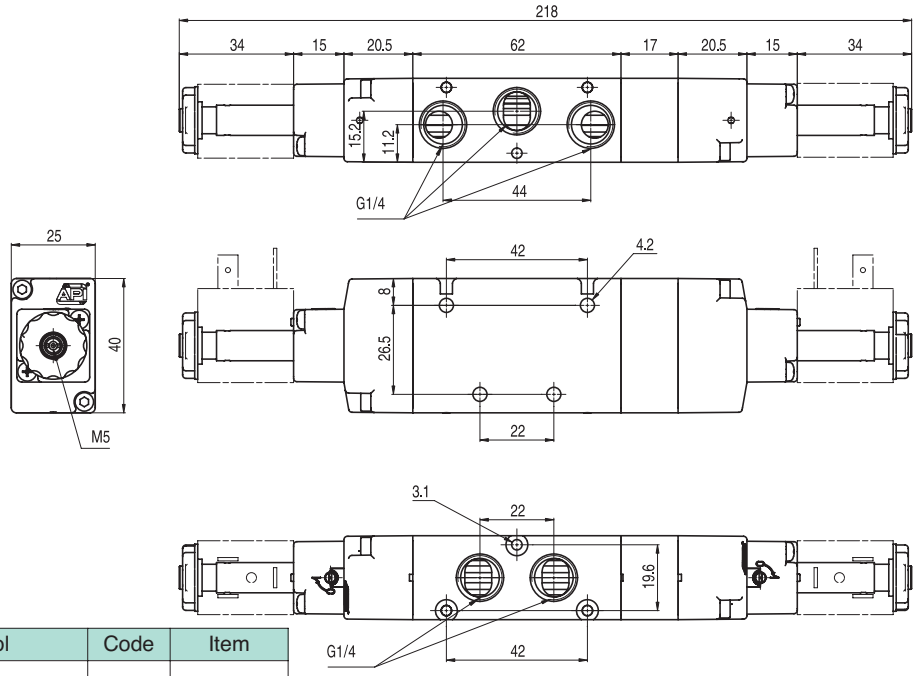

Version	Symbol	Code	Item
5/3 with closed centres	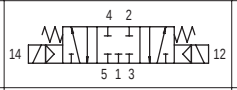	034131	A1E270
5/3 with open centres	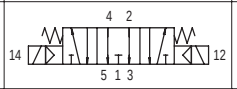	034133	A1E271
5/3 with pressurised centres	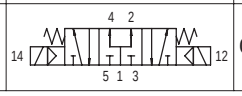	034132	A1E272

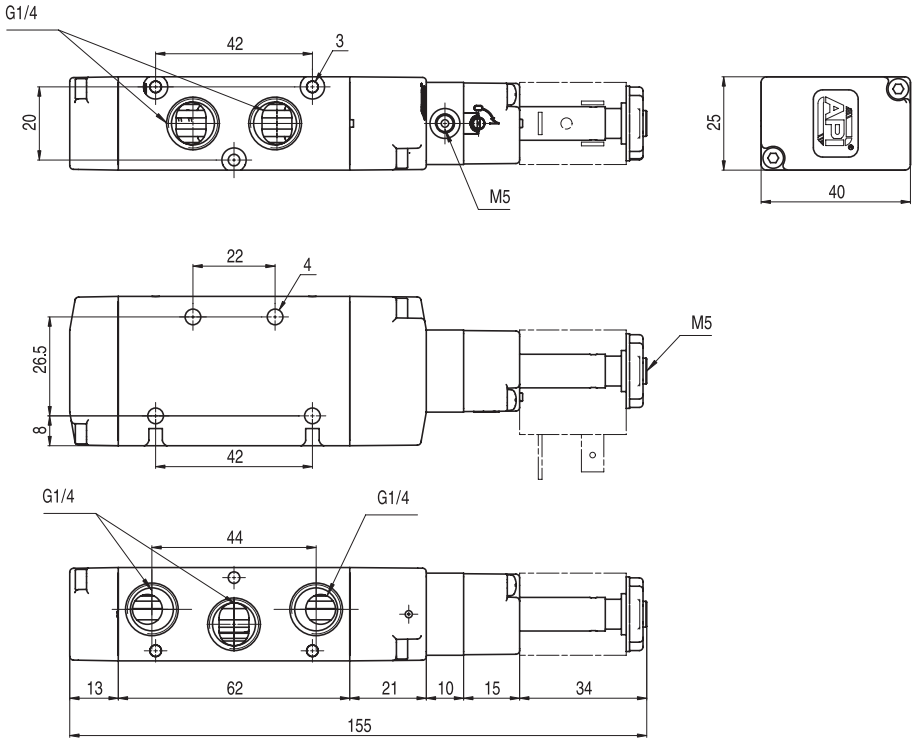

Version	Symbol	Code	Item
5/2 solenoid/spring, external air pilot	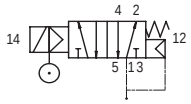	034035	A1K250

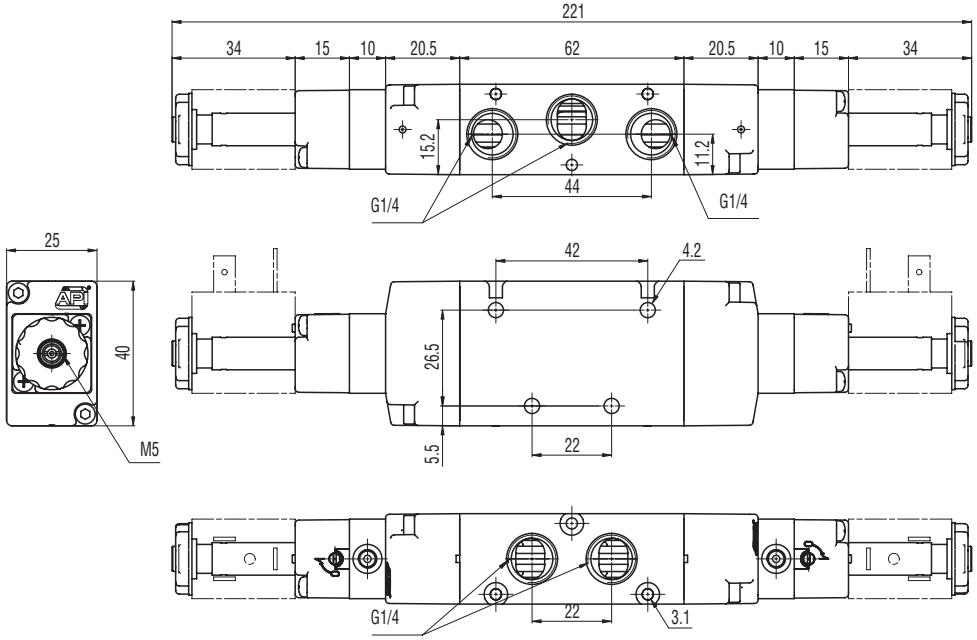

Version	Symbol	Code	Item
5/2 solenoid/solenoid, external air pilot	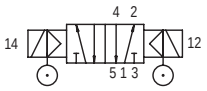	034034	A1K251

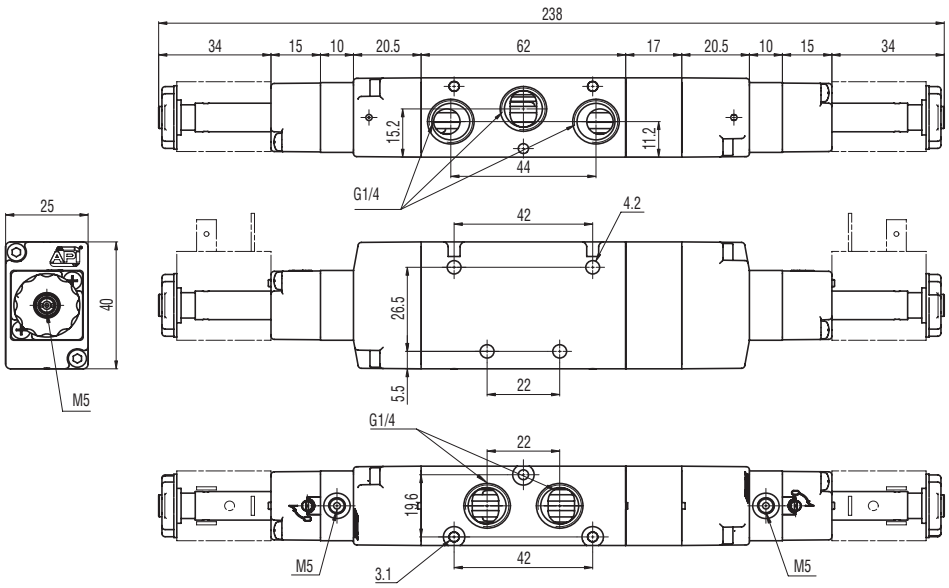

Version	Symbol	Code	Item
5/3 with closed centres, external air pilot	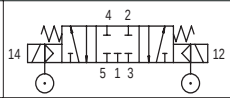	034037	A1K270
5/3 with open centres, external air pilot	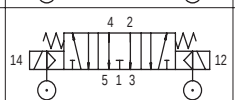	034038	A1K271
5/3 with pressurised centres, external air pilot	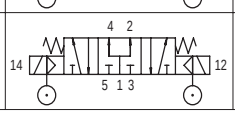	034036	A1K272

Executions

Version	Symbol	Code	Item
3/2 NC	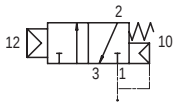	034027	A1P230
3/2 NO	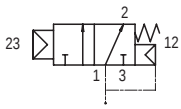	034054	A1P231
3/2 pilot/pilot	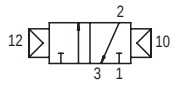	034026	A1P232
3/2 pilot/pilot, differential	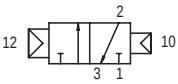	034055	A1P233



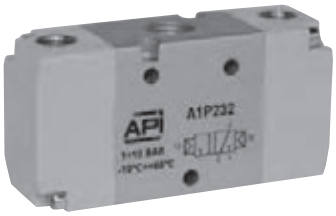

Series of spool valves, with static seals, high flow, for panel or sub-base mounting.
For the sub-bases type A1B2... see page 2.85.1

On request, they can be supplied according Directive 94/9/EC - **ATEX**
II 2 GDc T5

Code key

Series	Actuation	Size	Function
A1	P = pneumatic	1 = 1/8" 2 = 1/4"	30 = 3/2 NC 31 = 3/2 NO 32 = 3/2 pilot/pilot 33 = 3/2 pilot/pilot, differential 50 = 5/2 pilot/spring 51 = 5/2 pilot/pilot 52 = 5/2 pilot/pilot, differential 70 = 5/3 CC 71 = 5/3 CO 72 = 5/3 CP

Technical data

Fluid	Compressed filtered air with or without lubrication. Lubrication, if be used, must be continous.	
Pressure range	1 ÷ 10 bar	
Temperature range	-10°C ÷ +60°C	
Orifice	8 mm	
Flow	1.100 Nl/min at 6 bar with ΔP 1 bar	
Minimum piloting pressure	1,5 bar	
Mounting	In any position	
Response time	Energising:	De-energising:
Materials	Body: Aluminium Heads: Plastic Spool: Chemical nickel plated aluminium Distancers: Plastic Seals: Nitrile rubber (NBR)	

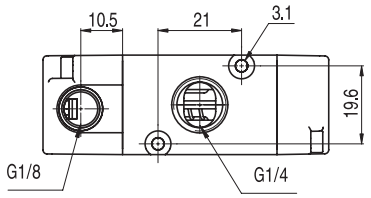

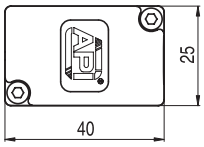

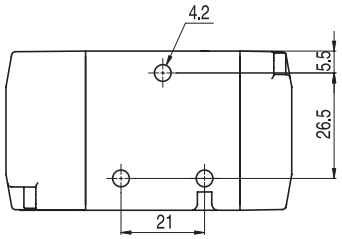

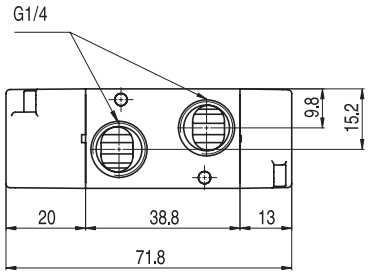

Version	Symbol	Code	Item
3/2 NC	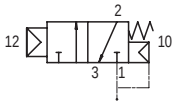	034027	A1P230
3/2 NO	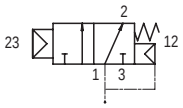	034054	A1P231

Version	Symbol	Code	Item
3/2 pilot/pilot	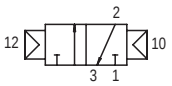	034026	A1P232
3/2 pilot/pilot, differential	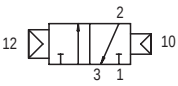	034055	A1P233

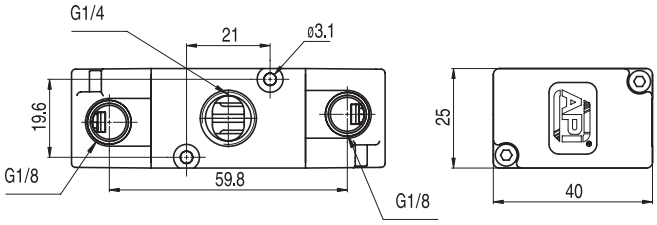

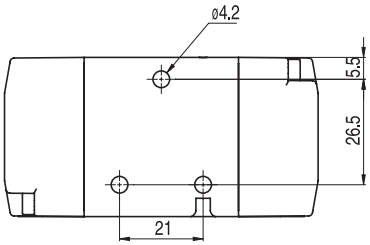

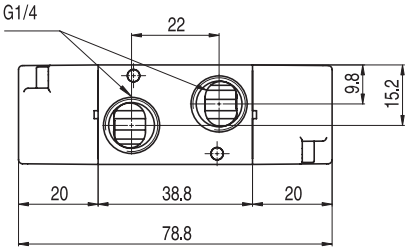

Executions

Version	Symbol	Code	Item
5/2 pilot/spring	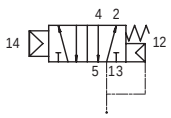	034101	A1P250
5/2 pilot/pilot	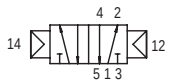	034102	A1P251
5/2 pilot/pilot, differential	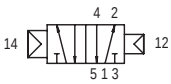	034056	A1P252
5/3 with closed centres	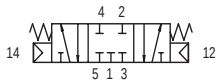	034029	A1P270
5/3 with open centres	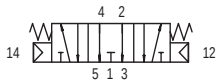	034030	A1P271
5/3 with pressurised centres	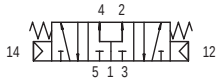	034028	A1P272

On request, they can be supplied according Directive 94/9/EC - **ATEX**
CE Ex II 2 GDc T5





Series of spool valves, with static seals, high flow, for panel or sub-base mounting.
For the sub-bases type A1B2... see page 2.85.1

Code key

Series	Actuation	Size	Function
A1	P = pneumatic	1 = 1/8" 2 = 1/4"	30 = 3/2 NC 31 = 3/2 NO 32 = 3/2 pilot/pilot 33 = 3/2 pilot/pilot, differential 50 = 5/2 pilot/spring 51 = 5/2 pilot/pilot 52 = 5/2 pilot/pilot, differential 70 = 5/3 CC 71 = 5/3 CO 72 = 5/3 CP

Technical data

Fluid	Compressed filtered air with or without lubrication. Lubrication, if be used, must be continous.	
Pressure range	1 ÷ 10 bar	5/3 = 2,5 ÷ 10 bar
Temperature range	-10°C ÷ +60°C	
Orifice	8 mm	
Flow	1.100 Nl/min at 6 bar with ΔP 1 bar	
Minimum piloting pressure	1,5 bar	
Mounting	In any position	
Response time	Energising:	De-energising:
Materials	Body: Aluminium Heads: Plastic Spool: Chemical nickel plated aluminium Distancers: Plastic Seals: Nitrile rubber (NBR)	

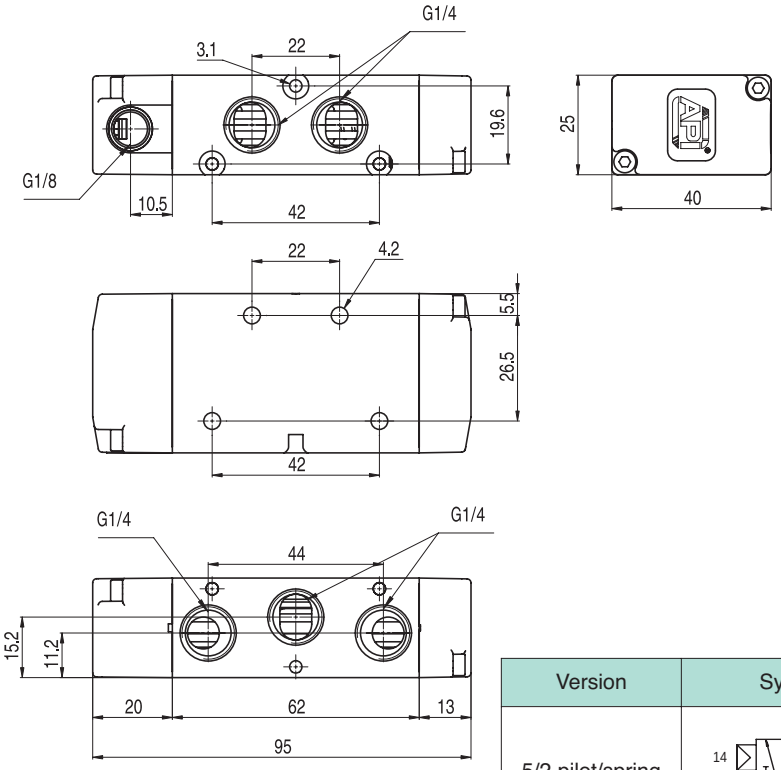

Version	Symbol	Code	Item
5/2 pilot/spring	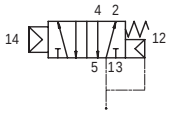	034101	A1P250

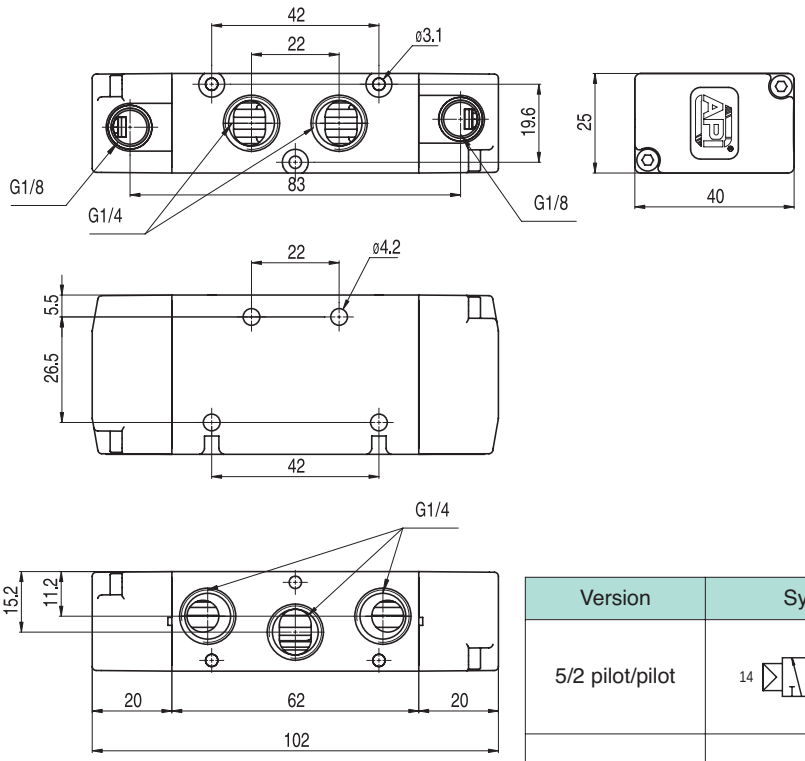

Version	Symbol	Code	Item
5/2 pilot/pilot	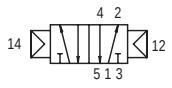	034102	A1P251
5/2 pilot/pilot, differential	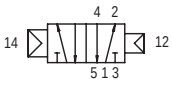	034056	A1P252

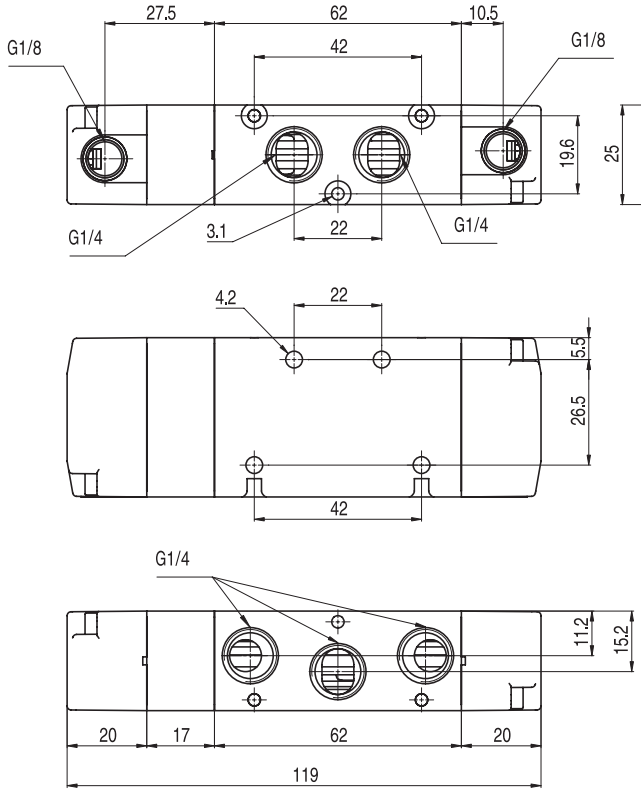

Version	Symbol	Code	Item
5/3 with closed centres	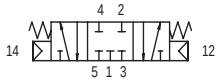	034029	A1P270
5/3 with open centres	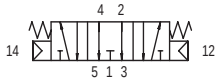	034030	A1P271
5/3 with pressurised centres	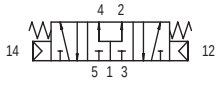	034028	A1P272

Valves series A1
1/4", sub-bases

Executions		
Version	Codie	Item
2 positions	034141	A1B202
3 positions	034142	A1B203
4 positions	034143	A1B204
5 positions	034144	A1B205
6 positions	034145	A1B206
7 positions	034146	A1B207
8 positions	034147	A1B208
9 positions	034148	A1B209
10 positions	034149	A1B210
blanking plate	034150	A1C2
plug	034151	A1T2

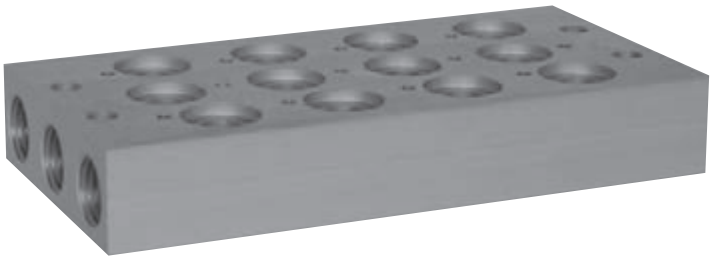

Multi-position sub-bases with fixed position, for valves series A1, 3 and 5 ways. 2 fixing screws for each position and the relevant seals are included in the base kit.
Spare positions can be blanked with plate.

Material:	Profiled anodised aluminium

On request, they can be supplied according Directive 94/9/EC - **ATEX**
CE Ex **II 2 GDc T5**

Code key

Series	Product	Size	N° positions
A1	B = base C = blanking plate T = plug	1 = 1/8" 2 = 1/4"	from 02 to 10

Plug

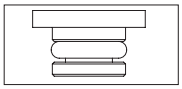

Blanking plate

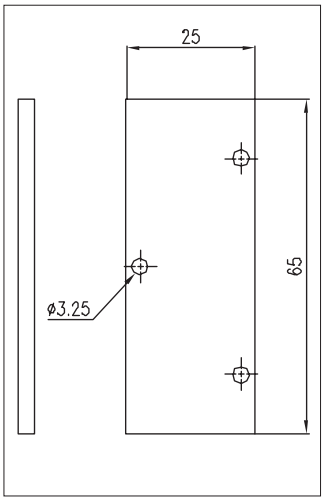

Multi-position sub-base

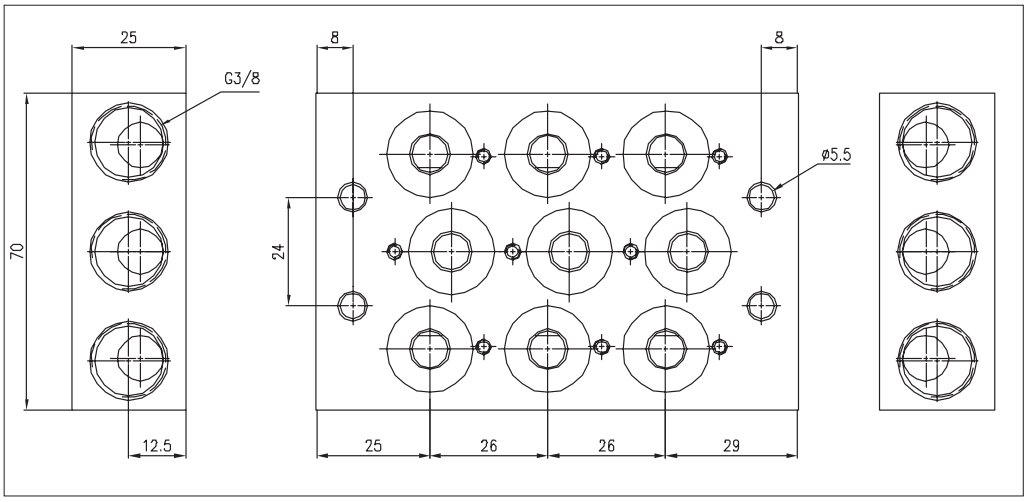

GENERAL INDEX
VALVES INDEX

Executions

Version	Symbol	Code	Item
3/2 NC solenoid/spring	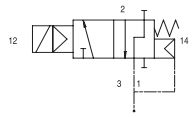	034059	A1NE230
3/2 solenoid/solenoid	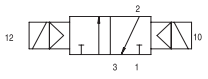	034060	A1NE232
5/2 solenoid/spring	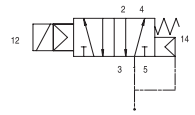	034057	A1NE250
5/2 solenoid/solenoid	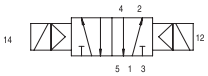	034058	A1NE251

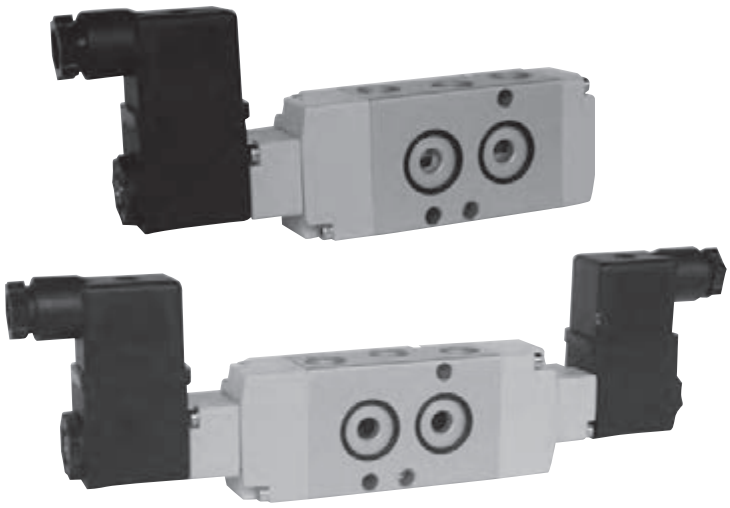

Series of spool valves, with static seals, high flow, for mounting on NAMUR interface.
Coils and connectors are to be ordered separately.
For the coils type ASA12... see page 2.200.1
For the connectors type A122... see page 2.210.20

On request, they can be supplied according Directive 94/9/EC - **ATEX**
CE Ex **II 2 GDc T5**

Code key

Series	Actuation	Size	Function
A1	NE= NAMUR electrical	2 = 1/4"	30 = 3/2 NC 32 = 3/2 solenoid/solenoid 50 = 5/2 solenoid/spring 51 = 5/2 solenoid/solenoid

Technical data

Fluid	Compressed filtered air with or without lubrication. Lubrication, if be used, must be continous.	
Pressure range	1 ÷ 10 bar	
Temperature range	-10°C ÷ +60°C	
Orifice	7 mm	
Flow	1.000 Nl/min at 6 bar with ΔP 1 bar	
Minimum piloting pressure	1,5 bar	Minimum external air pressure: 1,5 bar
Mounting	In any position	
Manual override	Two stable positions	
Response time	Energising:	De-energising:
Materials	Body: Aluminium Heads: Plastic Spool: Chemical nickel plated aluminium Distancers: Plastic Seals: Nitrile rubber (NBR)	

Version	Symbol	Code	Item
3/2 NC solenoid/spring	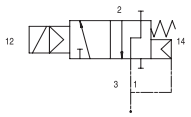	034059	A1NE230

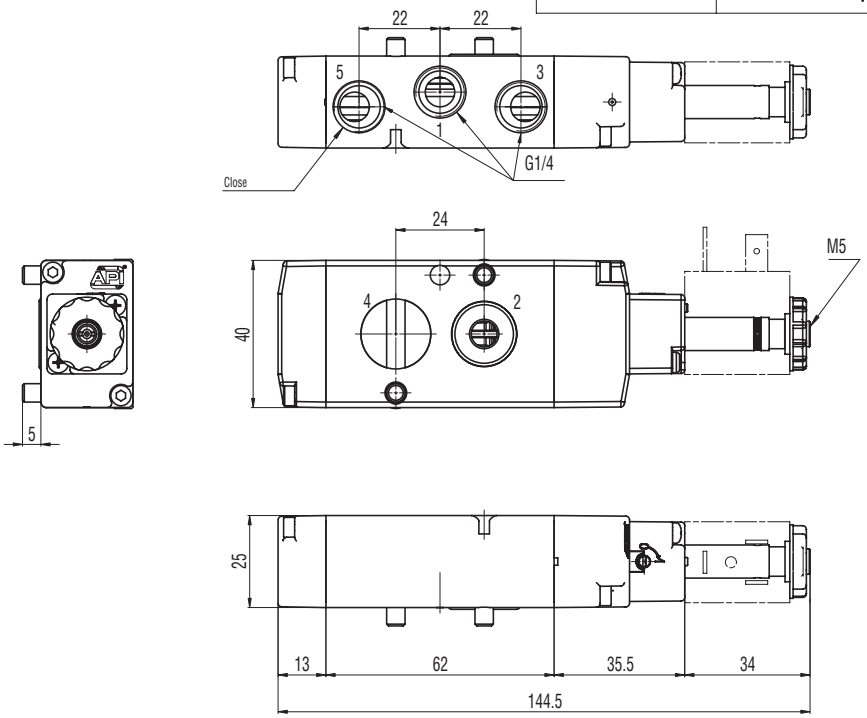

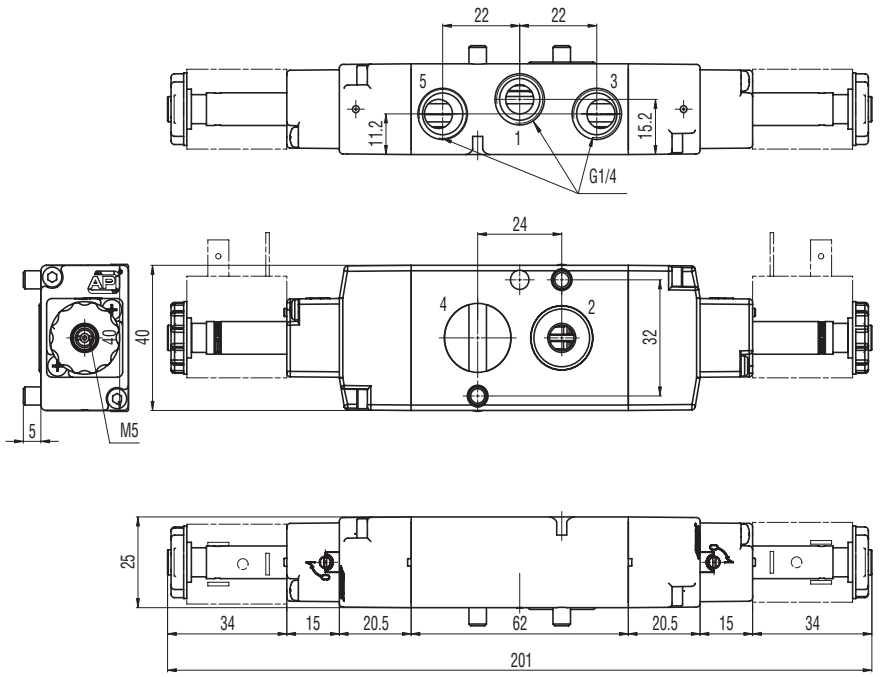

Version	Symbol	Code	Item
3/2 solenoid/solenoid	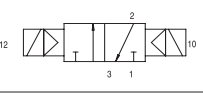	034060	A1NE232

Version	Symbol	Code	Item
5/2 solenoid/spring	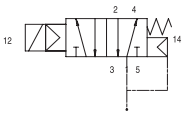	034057	A1NE250

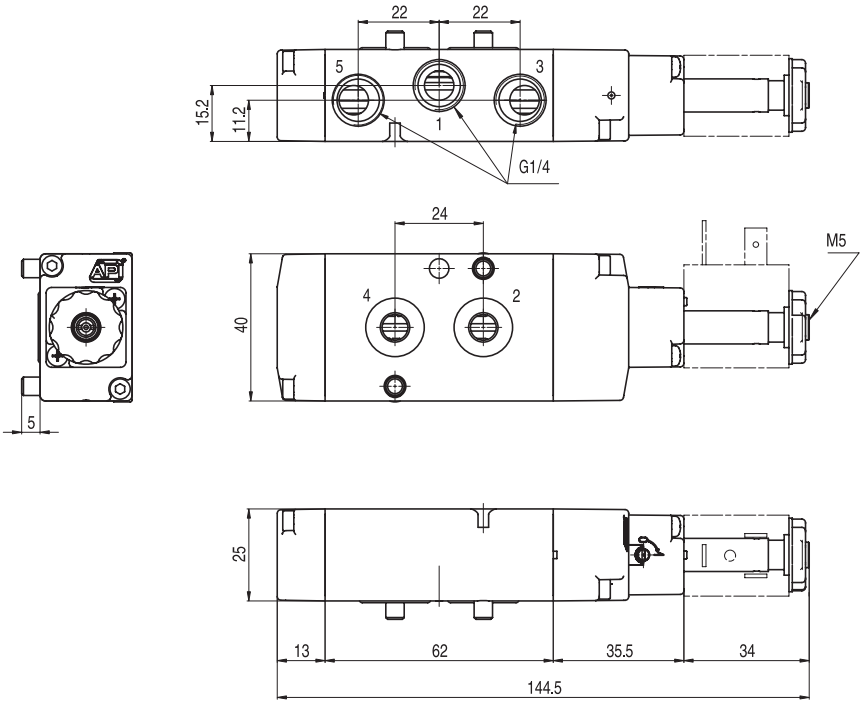

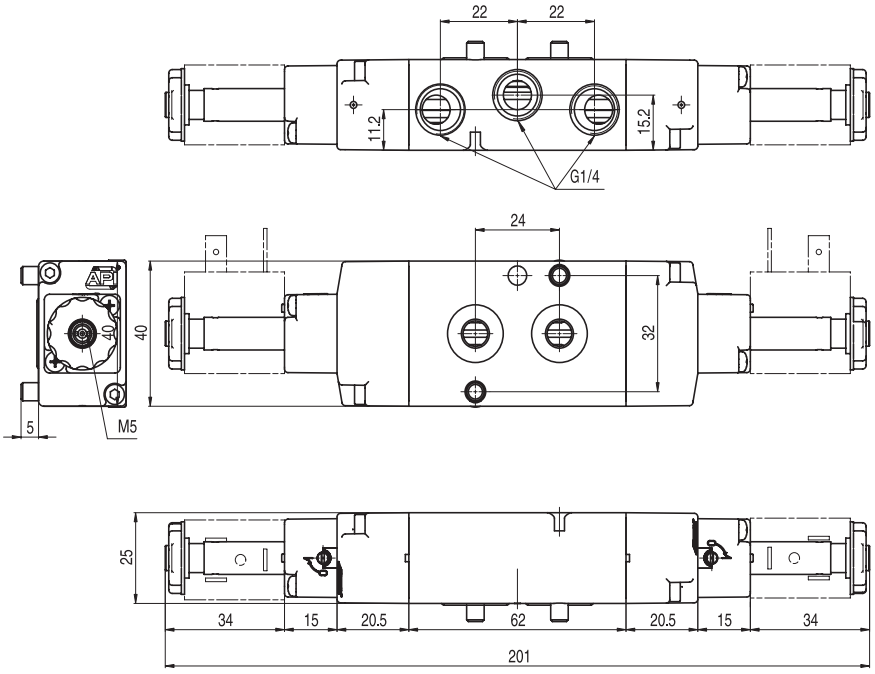

Version	Symbol	Code	Item
5/2 solenoid/solenoid	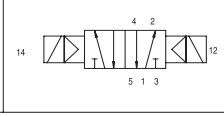	034058	A1NE251

Notes

GENERAL INDEX VALVES INDEX

Executions			
Version	Symbol	Code	Item
3/2 NC	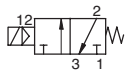	034113	A1E430
3/2 NO	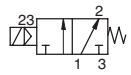	034122	A1E431
3/2 solenoid/solenoid	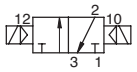	034123	A1E432
3/2 NC external air pilot	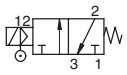	034137	A1K430
3/2 solenoid/solenoid, external air pilot	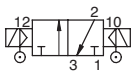	034158	A1K432



Series of spool valves, with static seals, high flow, for panel mounting.
Coils and connectors are to be ordered separately.
For the coils type ASA12.../ASA2... see page 2.200.1
For the connectors type A122... see page 2.210.20

On request, they can be supplied according Directive 94/9/EC - **ATEX**
CE Ex **II 2 GDc T5**

Code key

Series	Actuation	Size	Function
A1	E = electrical K = electrical with external air pilot	1 = 1/8" 2 = 1/4 4 = 1/2"	30 = 3/2 NC 31 = 3/2 NO 32 = 3/2 solenoid/solenoid 50 = 5/2 solenoid/spring 51 = 5/2 solenoid/solenoid 70 = 5/3 CC 71 = 5/3 CO 72 = 5/3 CP

Technical data			
Fluid	Compressed filtered air with or without lubrication. Lubrication, if be used, must be continous.		
Pressure range	0 ÷ 10 bar		
Temperature range	-10°C ÷ +60°C		
Orifice	15 mm		
Flow	2900 Nl/min at 6 bar with ΔP 1 bar		
Minimum piloting pressure	Monostable: 2.5 bar	Bistable: 1 bar	3 positions: 2.5 bar
Mounting	In any position		
Manual override	Bistable on solenoid pilot - Monostable on valve body		
Materials	Body: Aluminium Heads: Aluminium Spool: Aluminium Distancers: Aluminium Seals: NBR		

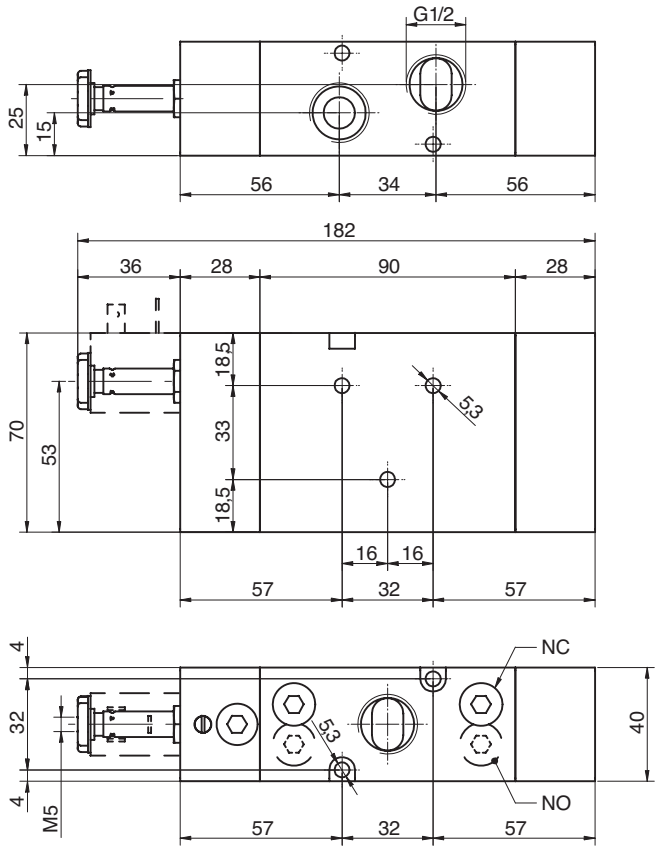

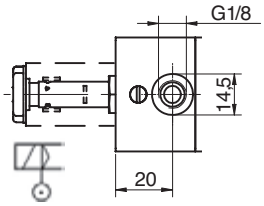

Version	Symbol	Code	Item
3/2 NC	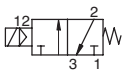	034113	A1E430
3/2 NA	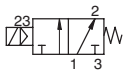	034122	A1E431
3/2 NC external air pilot	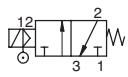	034137	A1K430

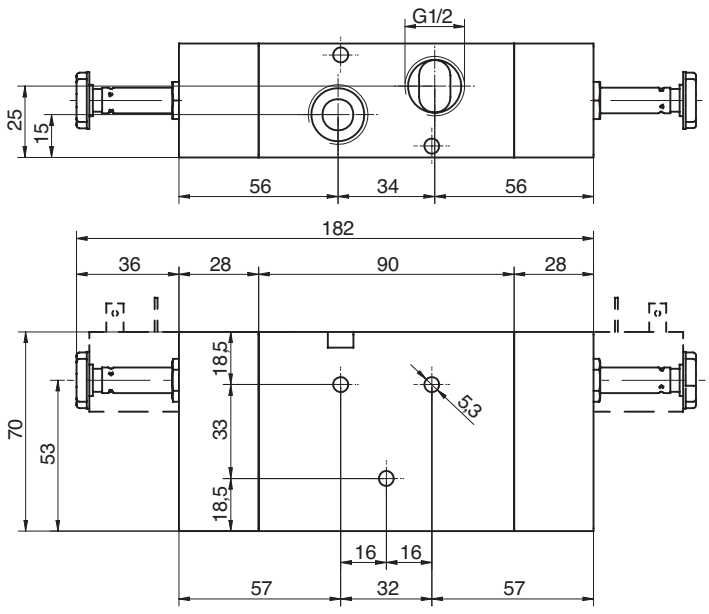

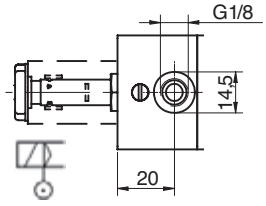

Version	Symbol	Code	Item
3/2 solenoid/solenoid	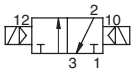	034123	A1E432
3/2 solenoid/solenoid, external air pilot	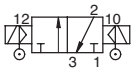	034158	A1K432

Executions

Version	Symbol	Code	Item
5/2 solenoid/spring	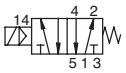	034114	A1E450
5/2 solenoid/solenoid	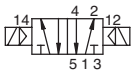	034115	A1E451
5/2 solenoid/solenoid differential	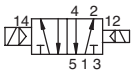	034139	A1E452
5/3 with closed centres	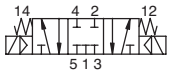	034124	A1E470
5/3 with open centres	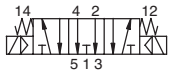	034125	A1E471
5/3 with pressurised centres	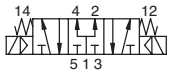	034126	A1E472
5/2 solenoid/spring external air pilot	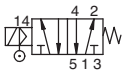	034138	A1K450
5/2 solenoid/solenoid external air pilot	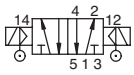	034140	A1K451
5/3 with closed centres, external air pilot	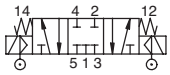	034159	A1K470
5/3 with open centres, external air pilot	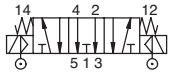	034160	A1K471
5/3 with presurised centres, external air pilot	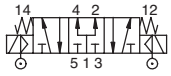	034161	A1K472



Series of spool valves, with static seals, high flow, for panel mounting.
Coils and connectors are to be ordered separately.
For the coils type ASA12.../ASA2... see page 2.200.1
For the connectors type A122... see page 2.210.20

Code key

Series	Actuation	Size	Function
A1	E = electrical K = elettrical with external air pilot	1 = 1/8" 2 = 1/4" 4 = 1/2"	30 = 3/2 NC 31 = 3/2 NO 32 = 3/2 solenoid/solenoid 50 = 5/2 solenoid/spring 51 = 5/2 solenoid/solenoid 52 = 5/2 solenoid/solenoid differential 70 = 5/3 CC 71 = 5/3 CO 72 = 5/3 CP

On request, they can be supplied according Directive 94/9/EC - **ATEX**
CE Ex **II 2 GDc T5**

Technical data

Fluid	Compressed filtered air with or without lubrication. Lubrication, if be used, must be continous.		
Pressure range	0 ÷ 10 bar		
Temperature range	-10°C ÷ +60°C		
Orifice	15 mm		
Flow	2900 Nl/min at 6 bar with ΔP 1 bar		
Minimum piloting pressure	Monostable: 2.5 bar	Bistable: 1 bar	3 positions: 2.5 bar
Mounting	In any position		
Pilot	Pilot in line		
Manual override	Bistable on solenoid pilot - Monostable on valve body		
Materials	Body: Aluminium Heads: Aluminium Spool: Aluminium Distancers: Aluminium Seals: NBR		

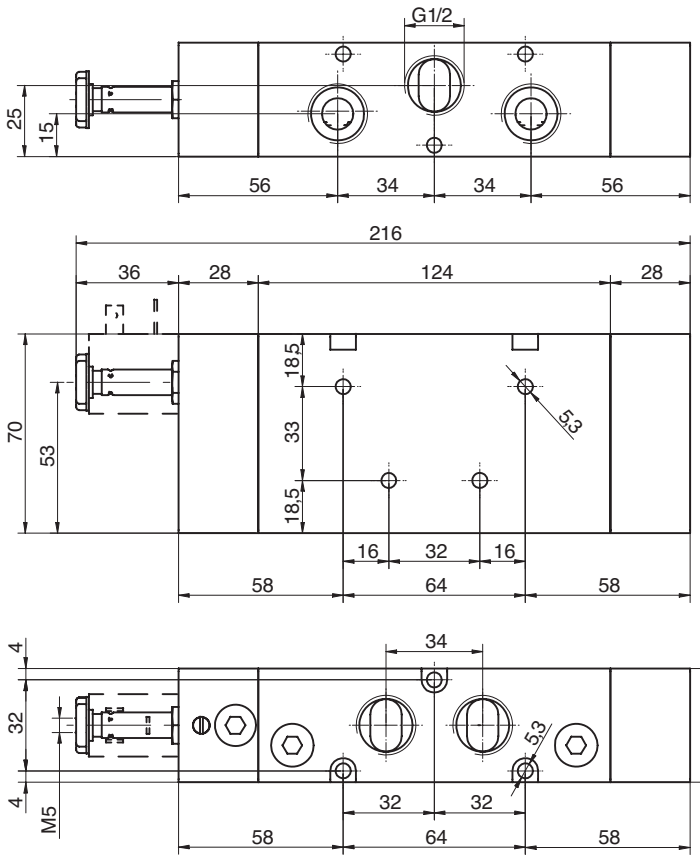

Version	Symbol	Code	Item
5/2 solenoid/spring	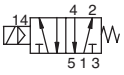	034114	A1E450
5/2 solenoid/spring external air pilot	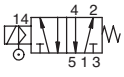	034138	A1K450

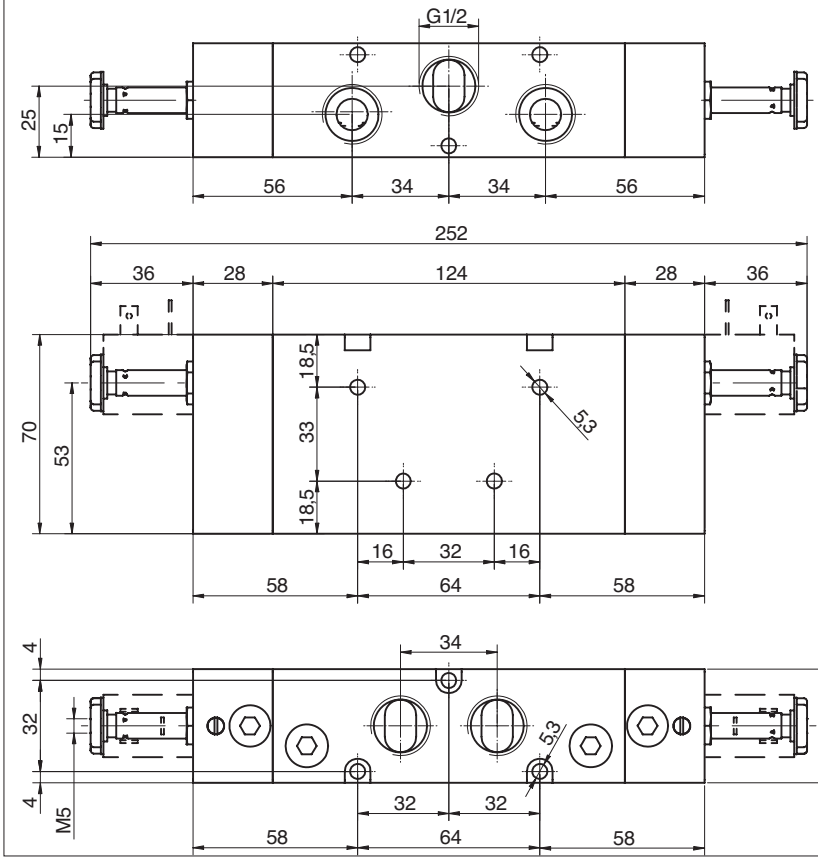

Versione	Simbolo	Codice	Articolo
5/2 solenoid/solenoid	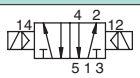	034115	A1E451
5/2 solenoid/solenoid differential	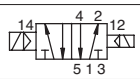	034139	A1E452
5/3 with closed centres	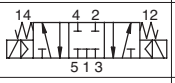	034124	A1E470
5/3 with open centres	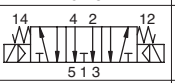	034125	A1E471
5/3 with pressurised centres	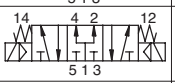	034126	A1E472
5/2 solenoid/solenoid external air pilot	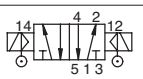	034140	A1K451
5/3 closed centres external air pilot	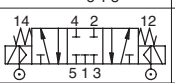	034159	A1K470
5/3 open centres external air pilot	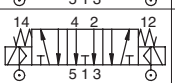	034160	A1K471
5/3 with pressurised centres external air pilot	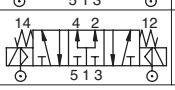	034161	A1K472

Esecuzioni			
Version	Symbol	Code	Item
3/2 NC	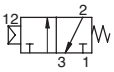	034116	A1P430
3/2 NO	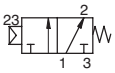	034127	A1P431
3/2 pilot/pilot	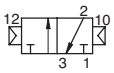	034128	A1P432



Series of spool valves, with static seals, high flow, for panel mounting.

On request, they can be supplied according Directive 94/9/EC - **ATEX**
CE Ex II 2 GDc T5

Code key

Series	Actuation	Size	Function
A1	P = pneumatic	1 = 1/8" 2 = 1/4" 4 = 1/2"	30 = 3/2 NC 31 = 3/2 NO 32 = 3/2 pilot/pilot 33 = 3/2 pilot/pilot differential 50 = 5/2 pilot/spring 51 = 5/2 pilot/pilot 52 = 5/2 pilot/pilot differential 70 = 5/3 CC 71 = 5/3 CO 72 = 5/3 CP

Technical data			
Fluid	Compressed filtered air with or without lubrication. Lubrication, if be used, must be continous.		
Pressure range	0 ÷ 10 bar		
Temperature range	-10°C ÷ +60°C		
Orifice	15 mm		
Flow	2900 Nl/min at 6 bar with ΔP 1 bar		
Minimum piloting pressure	Monostable: 2.5 bar	Bistable: 1 bar	3 positions: 2.5 bar
Mounting	In any position		
Manual override	Bistable on solenoid pilot - Monostable on valve body		
Materials	Body: Aluminium Heads: Aluminium Spool: Aluminium Distancers: Aluminium Seals: NBR		

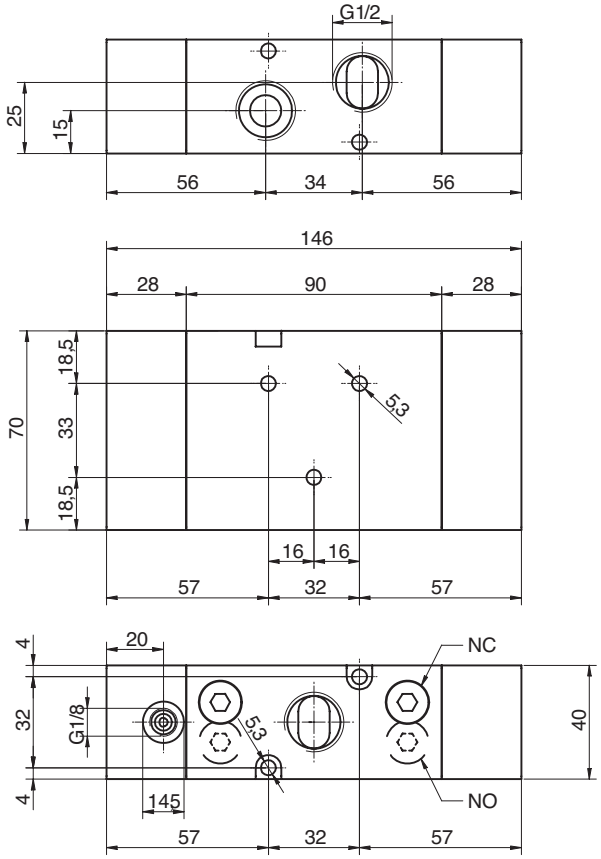

Version	Symbol	Code	Item
3/2 NC	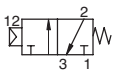	034116	A1P430
3/2 NO	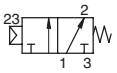	034127	A1P431

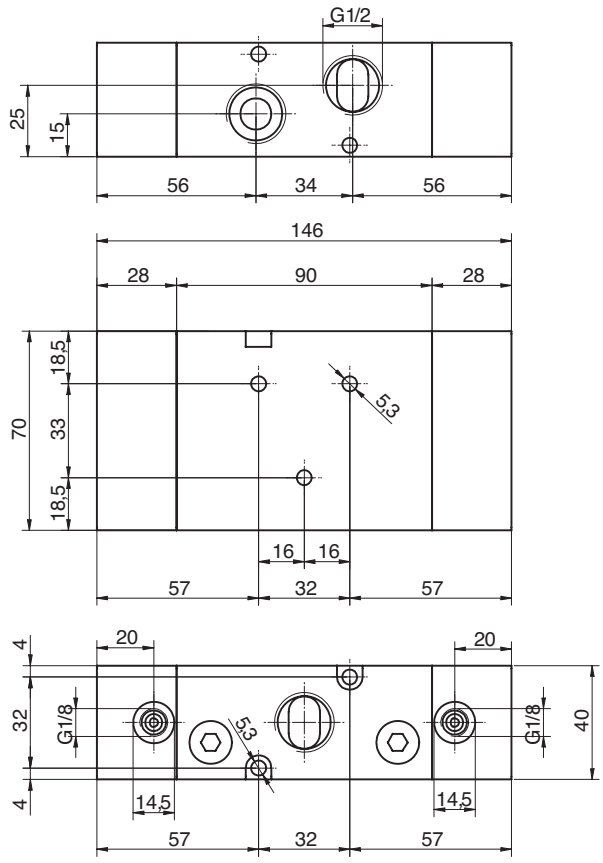

Version	Symbol	Code	Item
3/2 pilot/pilot	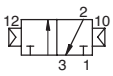	034128	A1P432

Executions

Version	Symbol	Code	Item
5/2 pilot/spring	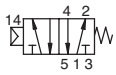	034117	A1P450
5/2 pilot/pilot	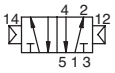	034118	A1P451
5/2 pilot/pilot differential	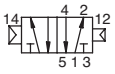	034136	A1P452
5/3 with closed centres	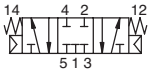	034129	A1P470
5/3 with open centres	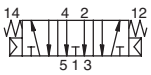	034130	A1P471
5/3 with pressurised centres	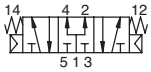	034135	A1P472

On request, they can be supplied according Directive 94/9/EC - **ATEX**
CE Ex **II 2 GDc T5**



Series of spool valves, with static seals, high flow, for panel mounting.

Code key

Series	Actuation	Size	Function
A1	P = pneumatic	1 = 1/8" 2 = 1/4" 4 = 1/2"	30 = 3/2 NC 31 = 3/2 NO 32 = 3/2 pilot/pilot 33 = 3/2 pilot/pilot differential 50 = 5/2 pilot/spring 51 = 5/2 pilot/pilot 52 = 5/2 pilot/pilot differential 70 = 5/3 CC 71 = 5/3 CO 72 = 5/3 CP

Technical data

Fluid	Compressed filtered air with or without lubrication. Lubrication, if be used, must be continous.		
Pressure range	0 ÷ 10 bar		
Temperature range	-10°C ÷ +60°C		
Orifice	15 mm		
Flow	2900 Nl/min at 6 bar with ΔP 1 bar		
Minimum piloting pressure	Monostable: 2.5 bar	Bistable: 1 bar	3 positions: 2.5 bar
Mounting	In any position		
Manual override	Bistable on solenoid pilot - Monostable on valve body		
Materials	Body: Aluminium Heads: Aluminium Spool: Aluminium Distancers: Aluminium Seals: NBR		

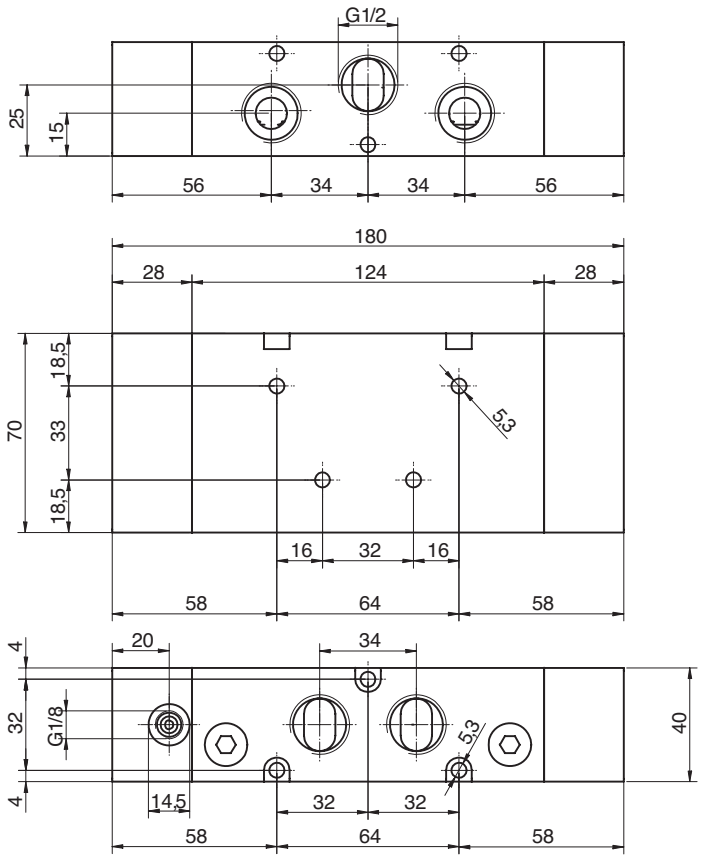

Version	Symbol	Code	Item
5/2 pilot/spring	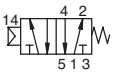	034117	A1P450

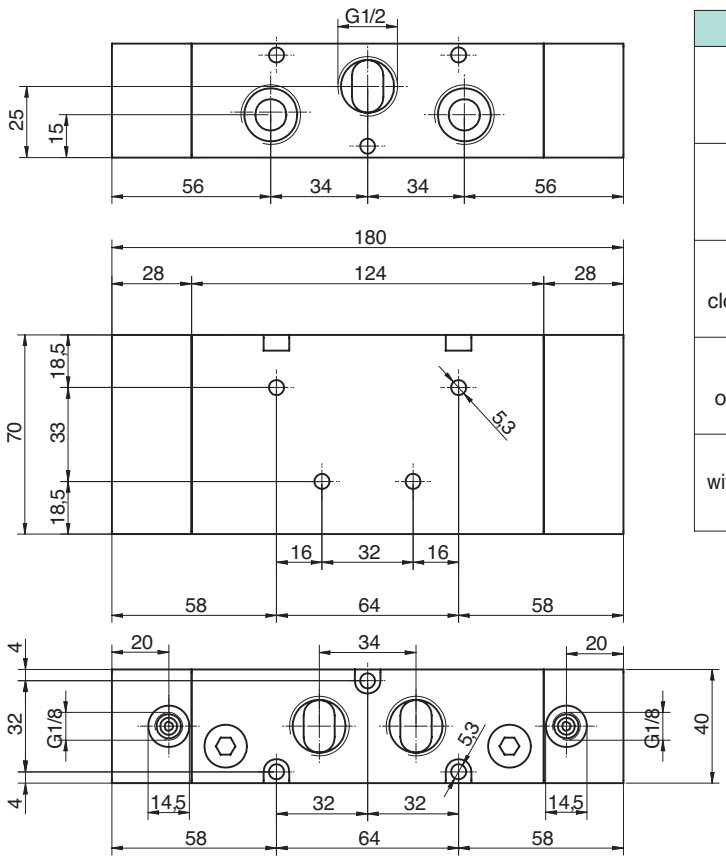

Version	Symbol	Code	Item
5/2 pilot/pilot	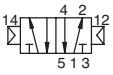	034118	A1P451
5/2 pilot/pilot differential	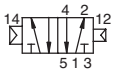	034136	A1P452
5/3 closed centres	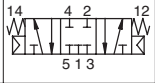	034129	A1P470
5/3 open centres	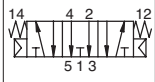	034130	A1P471
5/3 with pressurised centres	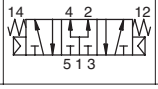	034135	A1P472

Executions

Version	Symbol	Code	Item
5/2 solenoid/spring	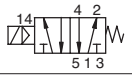	032020	ISO1E50
5/2 solenoid/solenoid	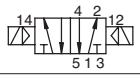	032030	ISO1E51
5/2 solenoid/solenoid differential	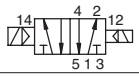	032037	ISO1E52
5/3 with closed centres	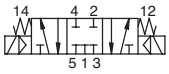	032031	ISO1E70
5/3 with open centres	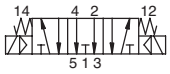	032032	ISO1E71
5/3 with pressurised centres	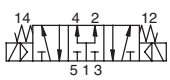	032043	ISO1E72
5/2 solenoid/spring external air pilot	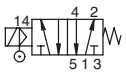	032021	ISO1K50
5/2 solenoid/solenoid external air pilot	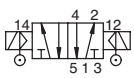	032044	ISO1K51
5/2 solenoid/solenoid differential external air pilot	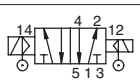	032048	ISO1K52
5/3 with closed centres external air pilot	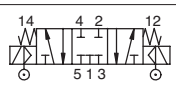	032049	ISO1K70
5/3 with open centres external air pilot	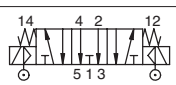	032053	ISO1K71
5/3 with pressurised centres external air pilot	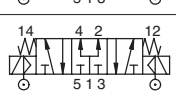	032054	ISO1K72

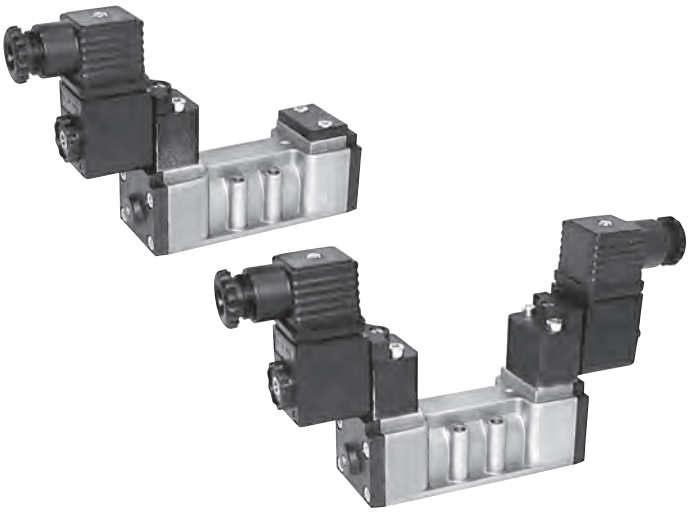

Series of spool valves, conforming to ISO 5599/1 standards for the mounting only on sub-base, with CNOMO pilot.
Coils and connectors are to be ordered separately.

For the coils type ASA12.../ASA2... see page 2.200.1
For the connectors type A122... /A182... see page 2.210.20
For the sub-bases type SBA1... see page 2.120.1

Code key

Series	Size	Actuation	Function
ISO	1 2	E = electrical K = elettrical with external air pilot	50 = 5/2 solenoid/spring 51 = 5/2 solenoid/solenoid 52 = 5/2 solenoid/solenoid differential 70 = 5/3 CC 71 = 5/3 CO 72 = 5/3 CP

NOTE: FOR VALVES WITH PILOT IN LINE SEE PAGE 2.111.1

On request, they can be supplied according Directive 94/9/EC - **ATEX**
CE Ex **II 2 GDc T5**

Technical data

Fluid	Compressed filtered air with or without lubrication. Lubrication, if be used, must be continous.		
Pressure range	0 ÷ 10 bar		
Temperature range	-10°C ÷ +60°C		
Orifice	8,5 mm		
Flow	1100 Nl/min at 6 bar with ΔP 1 bar		
Minimum piloting pressure	Monostable: 2 bar	Bistable: 1 bar	3 positions: 2 bar
Mounting	In any position		
Electropilot	Conforming to CNOMO		
Manual override	Bistable on solenoid pilot - Monostable on valve body		
Materials	Body: Aluminium Heads: Plastic Spool: Aluminium Distancers: Plastic Seals: NBR		

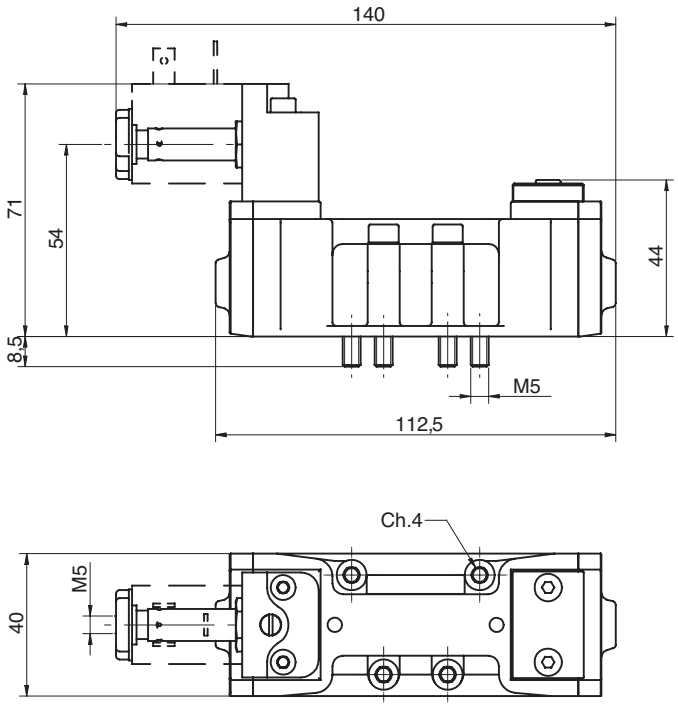

Version	Symbol	Code	Item
5/2 solenoid/spring	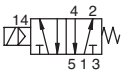	032020	ISO1E50
5/2 solenoid/spring external air pilot	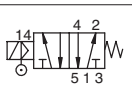	032021	ISO1K50

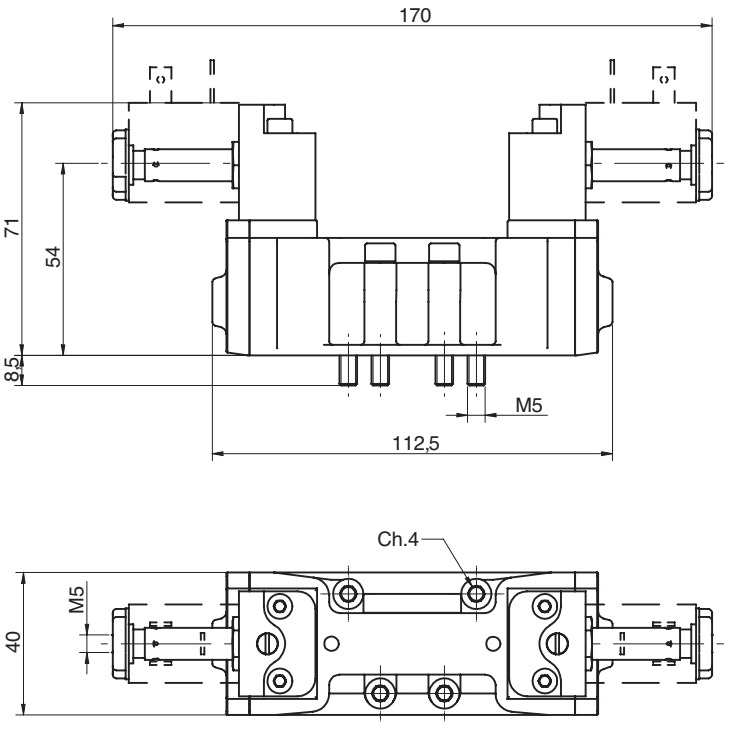

Version	Symbol	Code	Item
5/2 solenoid/solenoid	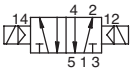	032030	ISO1E51
5/2 solenoid/solenoid differential	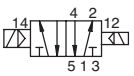	032037	ISO1E52
5/3 with closed centres	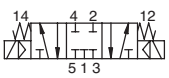	032031	ISO1E70
5/3 with open centres	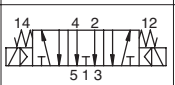	032032	ISO1E71
5/3 with pressurised centres	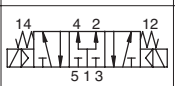	032043	ISO1E72
5/2 solenoid/solenoid external air pilot	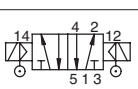	032044	ISO1K51
5/2 solenoid/ solenoid external air pilot differential	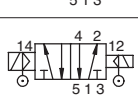	032048	ISO1K52
5/3 with closed centres external air pilot	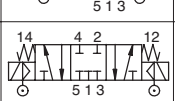	032049	ISO1K70
5/3 with open centres external air pilot	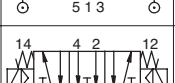	032053	ISO1K71
5/3 with pressuri-sed centres external air pilot	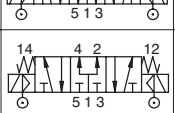	032054	ISO1K72

Execution

Version	Symbol	Code	Item
5/2 solenoid/spring	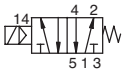	032060	ISO1EL50
5/2 solenoid/solenoid	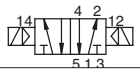	032070	ISO1EL51
5/2 solenoid/solenoid differential	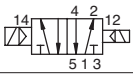	032061	ISO1EL52
5/3 with closed centres	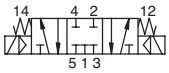	032071	ISO1EL70
5/3 with open centres	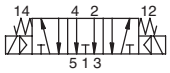	032072	ISO1EL71
5/3 with pressurised centres	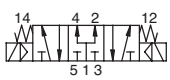	032066	ISO1EL72
5/2 solenoid/spring external air pilot	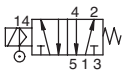	032063	ISO1KL50
5/2 solenoid/solenoid external air pilot	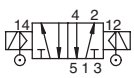	032064	ISO1KL51
5/2 solenoid/solenoid differential external air pilot	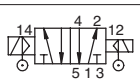	032065	ISO1KL52
5/3 with closed centres external air pilot	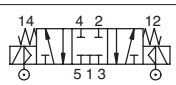	032067	ISO1KL70
5/3 with open centres external air pilot	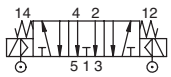	032068	ISO1KL71
5/3 with pressurised centres external air pilot	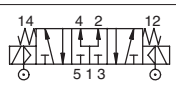	032069	ISO1KL72

Series of spool valves, conforming to ISO 5599/1 standards for the mounting only on sub-base, with IN LINE pilot.
Coils and connectors are to be ordered separately.
For the coils type ASA12.../ASA2... see page 2.200.1
For the connectors type A122... /A182... see page 2.210.20
For the sub-bases type SBA1... see page 2.120.1

Code key

Series	Size	Actuation	Function
ISO	1 2	EL = electrical KL = elettrical with external air pilot	50 = 5/2 solenoid/spring 51 = 5/2 solenoid/solenoid 52 = 5/2 solenoid/solenoid differential 70 = 5/3 CC 71 = 5/3 CO 72 = 5/3 CP

NOTE: FOR VALVES WITH CNOMO PILOT SEE PAGE 2.110.1

On request, they can be supplied according Directive 94/9/EC - **ATEX**
CE Ex II 2 GDc T5

Technical data

Fluid	Compressed filtered air with or without lubrication. Lubrication, if be used, must be continous.		
Pressure range	0 ÷ 10 bar		
Temperature range	-10°C ÷ +60°C		
Orifice	8,5 mm		
Flow	1100 Nl/min at 6 bar with ΔP 1 bar		
Minimum piloting pressure	Monostable: 2 bar	Bistable: 1 bar	3 positions: 2 bar
Mounting	In any position		
Electropilot	IN LINE		
Manual override	Bistable on solenoid pilot - Monostable on valve body		
Materials	Body: Aluminium Heads: Plastic Spool: Aluminium Distancers: Plastic Seals: NBR		

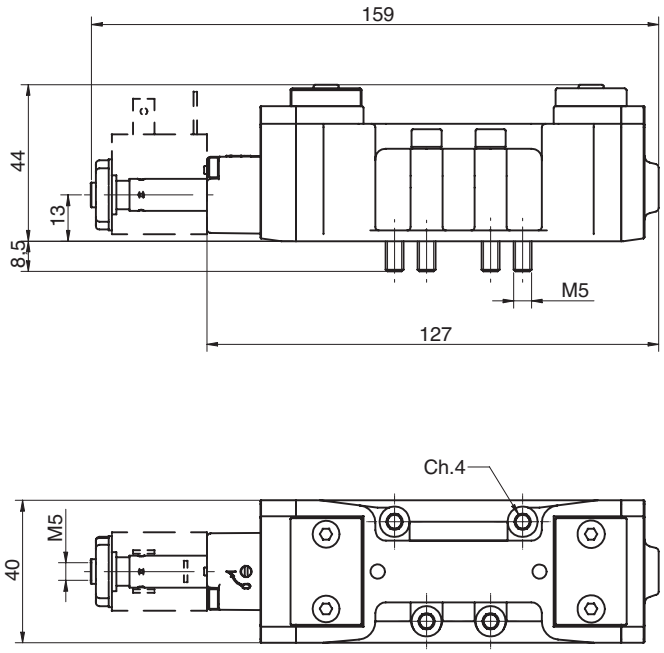

Version	Symbol	Code	Item
5/2 solenoid/spring	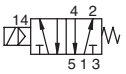	032060	ISO1EL50
5/2 solenoid/spring external air pilot	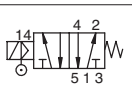	032063	ISO1KL50

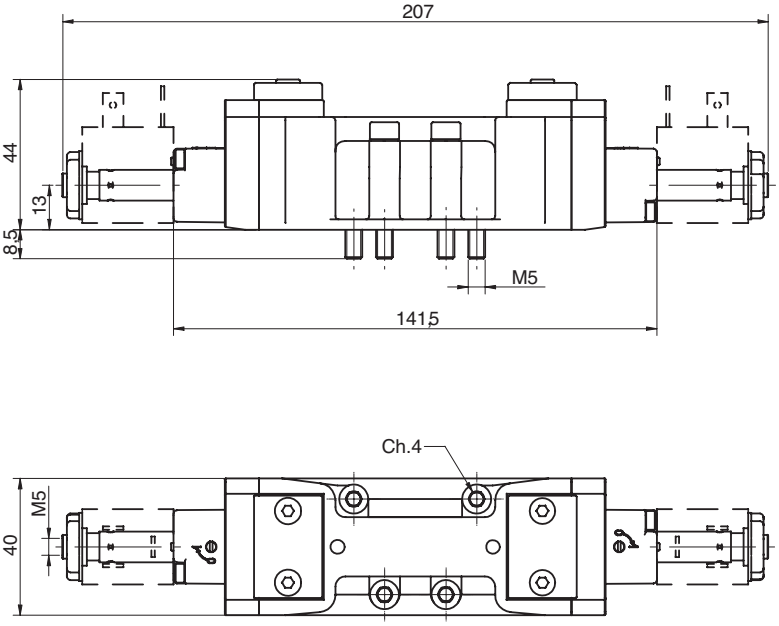

Version	Symbol	Code	Item
5/2 solenoid/solenoid	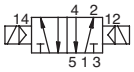	032070	ISO1EL51
5/2 solenoid/solenoid differential	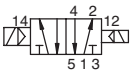	032061	ISO1EL52
5/3 with closed centres	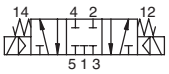	032071	ISO1EL70
5/3 with open centres	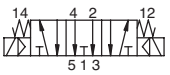	032072	ISO1EL71
5/3 with pressurised centres	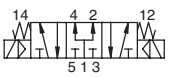	032066	ISO1EL72
5/2 solenoid/solenoid external air pilot	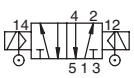	032064	ISO1KL51
5/2 solenoid/ solenoid external air pilot differential	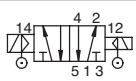	032065	ISO1KL52
5/3 with closed centres external air pilot	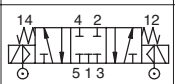	032067	ISO1KL70
5/3 with open centres external air pilot	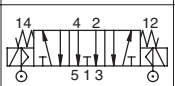	032068	ISO1KL71
5/3 with pressuri-sed centres external air pilot	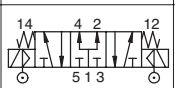	032069	ISO1KL72

Executions

Version	Symbol	Code	Item
5/2 pilot/spring	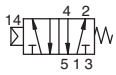	032000	ISO1P50
5/2 pilot/pilot	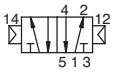	032001	ISO1P51
5/2 pilot/pilot differential	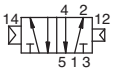	032002	ISO1P52
5/3 with closed centres	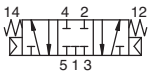	032003	ISO1P70
5/3 with open centres	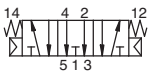	032004	ISO1P71
5/3 with pressurised centres	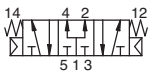	032019	ISO1P72

On request, they can be supplied according Directive 94/9/EC - **ATEX**
CE Ex II 2 GDc T5



Series of spool valves, conforming to ISO 5599/1 standards for the mounting only on sub-base.
For the sub-bases type SBA1... see page 2.120.1

Code key

Series	Actuation	Size	Function
ISO	1 2	P = pneumatic	50 = 5/2 pilot/spring 51 = 5/2 pilot/pilot 52 = 5/2 pilot/pilot differential 70 = 5/3 CC 71 = 5/3 CO 72 = 5/3 CP

Technical data

Fluid	Compressed filtered air with or without lubrication. Lubrication, if be used, must be continous.		
Pressure range	0 ÷ 10 bar		
Temperature range	-10°C ÷ +60°C		
Orifice	8,5 mm		
Flow	1100 Nl/min at 6 bar with ΔP 1 bar		
Minimum piloting pressure	Monostable: 2 bar	Bistable: 1 bar	3 positions: 2 bar
Mounting	In any position		
Manual override	Monostable on valve body		
Materials	Body: Aluminium Heads: Plastic Spool: Aluminium Distancers: Plastic Seals: NBR		

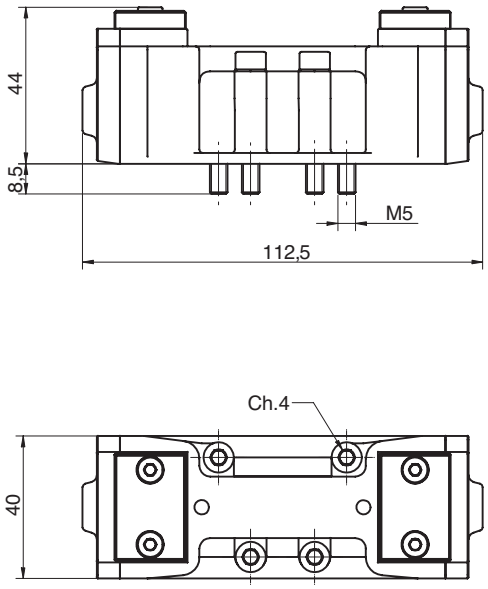

Version	Symbol	Code	Item
5/2 pilot/spring	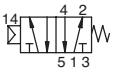	032000	ISO1P50
5/2 pilot/pilot		032001	ISO1P51
5/2 pilot/pilot differential		032002	ISO1P52
5/3 with closed centres	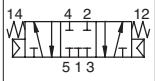	032003	ISO1P70
5/3 with open centres	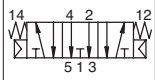	032004	ISO1P71
5/3 with pressurised centres	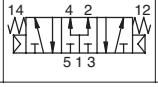	032019	ISO1P72

Executions			
Version	Symbol	Code	Item
Single sub-base		032190	SBA1S
Manifold sub-base		032120	SBA1M
Blank manifold end plate		032140	SBA1C
Ported manifold end plate		032141	SBA1A
Manifold blanking plate		032170	SBA1T
Interface for sub-base from size ISO1 to ISO2		032160	SBA1A2

The blank manifold end plate can be used to separate 2 supplies with different pressures on the same manifold.

On request, they can be supplied according Directive 94/9/EC - **ATEX**
CE II 2 GDc T5





Series of single and manifold sub-bases for valves ISO5599/1 size 1.

Materials:	Die-cast aluminium
	Seals: Nitrile rubber (NBR)
	Screws: Zinc plated steel

The kit SBA1M includes: 2 screws and 3 seals
The kit SBA1C/A includes: 2 screws and 3 seals
The kit SBA1T includes: 4 screws and 1 seal
The kit SBA1A2 includes: 4 screws and 6 seals

type: **SBA1S**

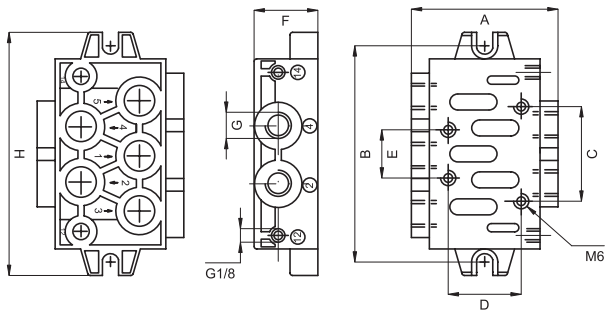

A	B	C	D	E	F	G	H
56	82,5	36	28	18	24	1/4”	92,5

type: **SBA1M**

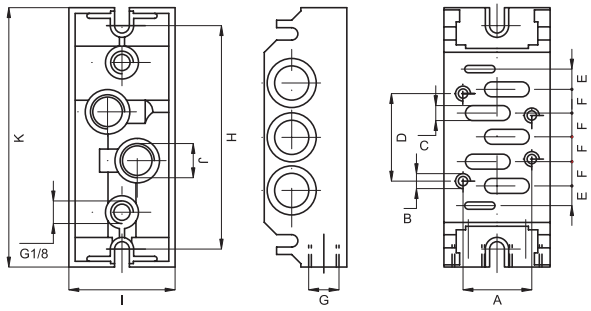

A	B	C	D	E	F	G	H	I	J	K
28	M5	4,5	36	8,5	9	1/4”	92	43	1/4”	106

type: **SBA1A2**

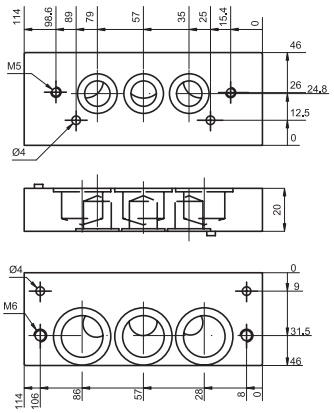

type: **SBA1C**
SBA1A

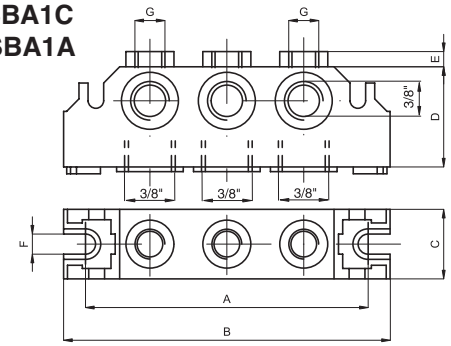

A	B	C	D	E	F	G
92	106	22	36	8	5,5	1/4”

Execution

Version	Symbol	Code	Item
5/2 solenoid/spring	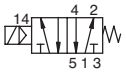	032040	ISO2E50
5/2 solenoid/solenoid	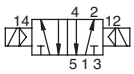	032050	ISO2E51
5/2 solenoid/solenoid differential	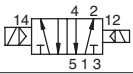	032042	ISO2E52
5/3 with closed centres	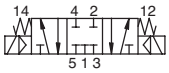	032051	ISO2E70
5/3 with open centres	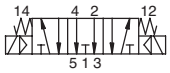	032052	ISO2E71
5/3 with pressurised centres	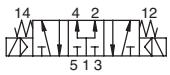	032055	ISO2E72
5/2 solenoid/spring external air pilot	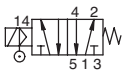	032039	ISO2K50
5/2 solenoid/solenoid external air pilot	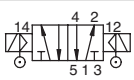	032056	ISO2K51
5/2 solenoid/solenoid differential external air pilot	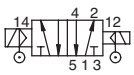	032057	ISO2K52
5/3 with closed centres external air pilot	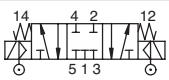	032058	ISO2K70
5/3 with open centres external air pilot	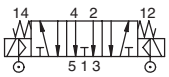	032059	ISO2K71
5/3 with pressurised centres external air pilot	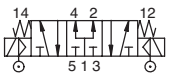	032062	ISO2K72

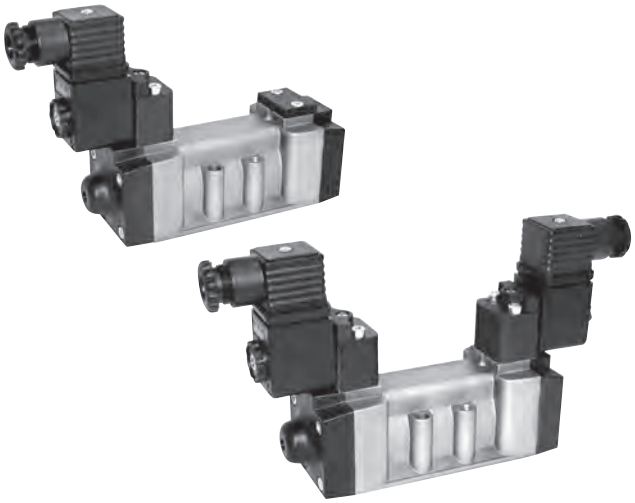

Series of spool valves, conforming to ISO 5599/1 standards for the mounting only on sub-base, with CNOMO pilot.
Coils and connectors are to be ordered separately.

For the coils type ASA12.../ASA2... see page 2.200.1
For the connectors type A122... /A182... see page 2.210.20
For the sub-bases type SBA2... see page 2.137.1

Code key

Series	Size	Actuation	Function
ISO	1 2	E = electrical K = elettrical with external air pilot	50 = 5/2 solenoid/spring 51 = 5/2 solenoid/solenoid 52 = 5/2 solenoid/solenoid differential 70 = 5/3 CC 71 = 5/3 CO 72 = 5/3 CP

On request, they can be supplied according Directive 94/9/EC - **ATEX**
CE Ex **II 2 GDc T5**

Technical data

Fluid	Compressed filtered air with or without lubrication. Lubrication, if be used, must be continous.		
Pressure range	0 ÷ 10 bar		
Temperature range	-10°C ÷ +60°C		
Orifice	15 mm		
Flow	2900 Nl/min at 6 bar with ΔP 1 bar		
Minimum piloting pressure	Monostable: 2.5 bar	Bistable: 1 bar	3 positions: 2.5 bar
Mounting	In any position		
Electropilot	Conforming to CNOMO		
Manual override	Bistable on solenoid pilot - Monostable on valve body		
Materials	Body: Aluminium Heads: Plastic Spool: Aluminium Distancers: Aluminium Seals: NBR		

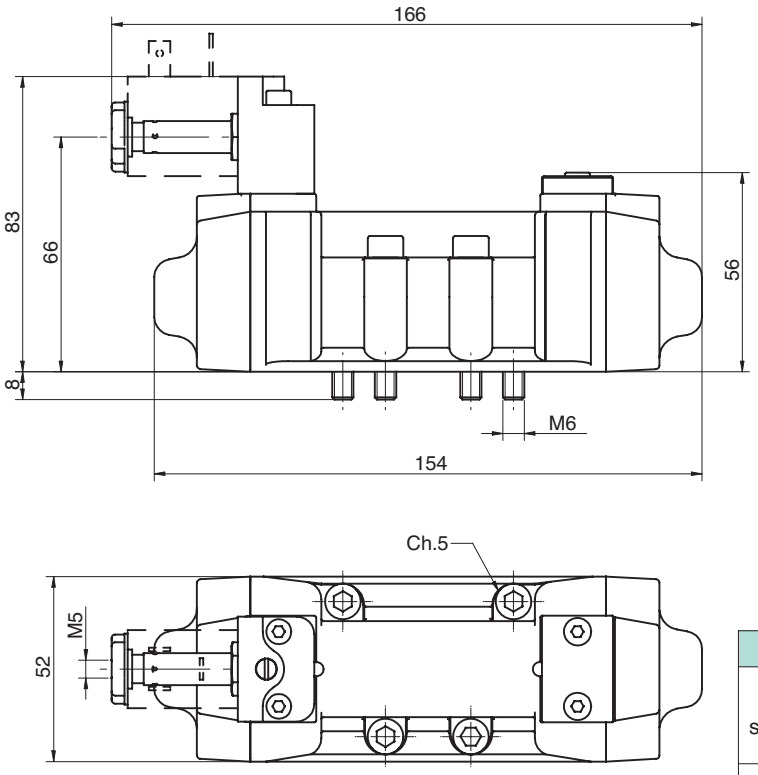

Version	Symbol	Code	Item
5/2 solenoid/spring	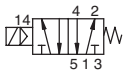	032040	ISO2E50
5/2 solenoid/spring external air pilot	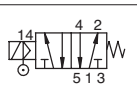	032039	ISO2K50

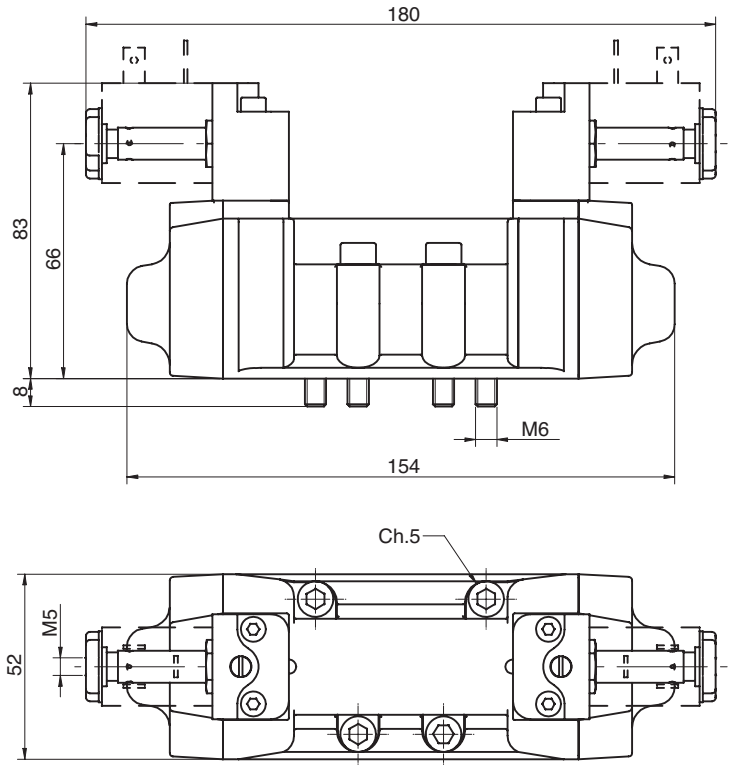

Version	Symbol	Code	Item
5/2 solenoid/solenoid	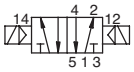	032050	ISO2E51
5/2 solenoid/solenoid differential	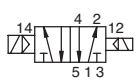	032042	ISO2E52
5/3 with closed centres	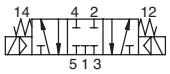	032051	ISO2E70
5/3 with open centres	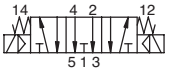	032052	ISO2E71
5/3 with pressurised centres	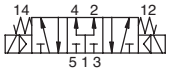	032055	ISO2E72
5/2 solenoid/solenoid external air pilot		032056	ISO2K51
5/2 solenoid/solenoid differential external air pilot	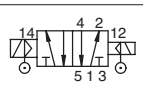	032057	ISO2K52
5/3 with closed centres external air pilot	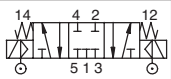	032058	ISO2K70
5/3 with open centres external air pilot	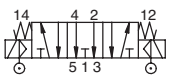	032059	ISO2K71
5/3 with pressurised centres external air pilot	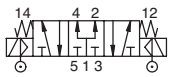	032062	ISO2K72

Executions

Version	Symbol	Code	Item
5/2 pilot/spring	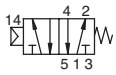	032005	ISO2P50
5/2 pilot/pilot	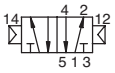	032011	ISO2P51
5/2 pilot/pilot differential	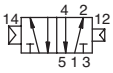	032012	ISO2P52
5/3 with closed centres	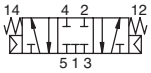	032013	ISO2P70
5/3 with open centres	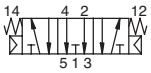	032014	ISO2P71
5/3 with pressurised centres	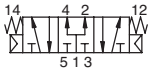	032038	ISO2P72

On request, they can be supplied according Directive 94/9/EC - **ATEX**
II 2 GDc T5

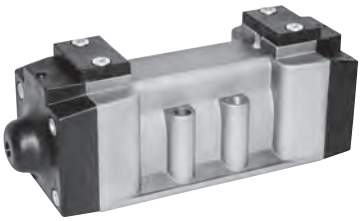

Series of spool valves, conforming to ISO 5599/1 standards for the mounting only on sub-base.
For the sub-bases type SBA2... see page 2.137.1

Code key

Series	Size	Actuation	Function
ISO	1 2	P = pneumatic	50 = 5/2 pilot/spring 51 = 5/2 pilot/pilot 52 = 5/2 pilot/pilot differential 70 = 5/3 CC 71 = 5/3 CO 72 = 5/3 CP

Technical data

Fluid	Compressed filtered air with or without lubrication. Lubrication, if be used, must be continous.		
Pressure range	0 ÷ 10 bar		
Temperature range	-10°C ÷ +60°C		
Orifice	15 mm		
Flow	2900 Nl/min at 6 bar with ΔP 1 bar		
Minimum piloting pressure	Monostable: 2.5 bar	Bistable: 1 bar	3 positions: 2.5 bar
Mounting	In any position		
Manual override	Monostable on valve body		
Materials	Body: Aluminium Heads: Plastic Spool: Aluminium Distancers: Aluminium Seals: NBR		

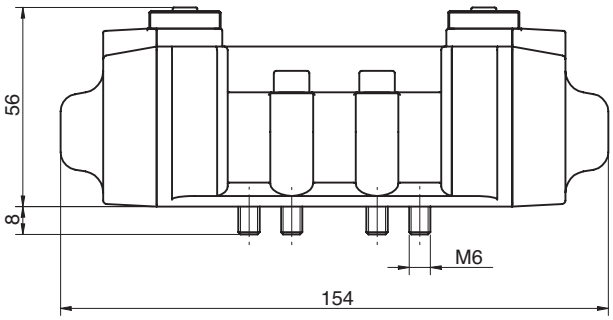

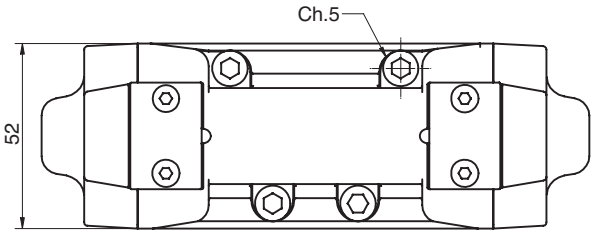

Version	Symbol	Code	Item
5/2 pilot/spring	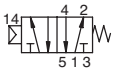	032005	ISO2P50
5/2 pilot/pilot		032011	ISO2P51
5/2 pilot/pilot differential	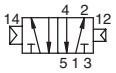	032012	ISO2P52
5/3 with closed centres	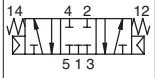	032013	ISO2P70
5/3 with open centres	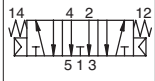	032014	ISO2P71
5/3 with pressurised centres	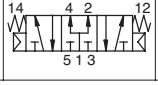	032038	ISO2P72

Executions			
Version	Symbol	Code	Item
Single sub-base		032200	SBA2S
Manifold sub-base		032130	SBA2M
Blank manifold end plate		032150	SBA2C
Ported manifold end plate		032151	SBA2A
Manifold blanking plate		032180	SBA2T
Interface for sub-base from size ISO1 to ISO2		032160	SBA1A2

The blank manifold end plate can be used to separate 2 supplies with different pressures on the same manifold.

On request, they can be supplied according Directive 94/9/EC - **ATEX**
CE Ex **II 2 GDc T5**





Series of single and manifold sub-bases for valves ISO5599/1 size 2.

Materials:	Die-cast aluminium Seals: Nitrile rubber (NBR) Screws: Zinc plated steel

The kit SBA2M includes: 2 screws and 3 seals
The kit SBA2C/A includes: 2 screws and 3 seals
The kit SBA2T includes: 4 screws and 1 seal
The kit SBA1A2 includes: 4 screws and 6 seals

type: **SBA2S**

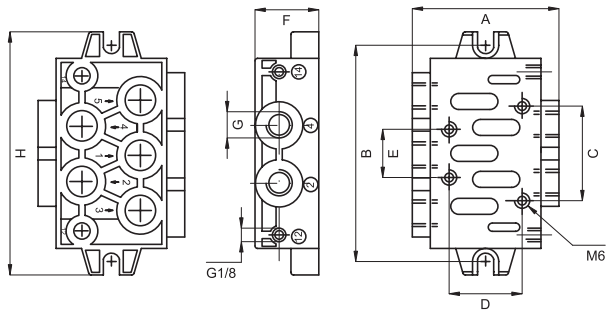

A	B	C	D	E	F	G	H
65	100,5	48	38	24	30	3/8”	112,5

type: **SBA2M**

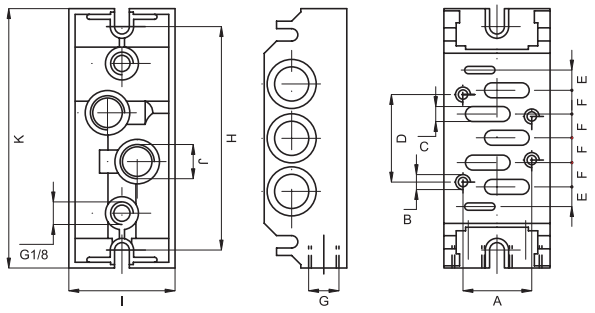

A	B	C	D	E	F	G	H	I	J	K
38	M6	7	48	10	12	3/8”	102	56	3/8”	120

type: **SBA1A2**

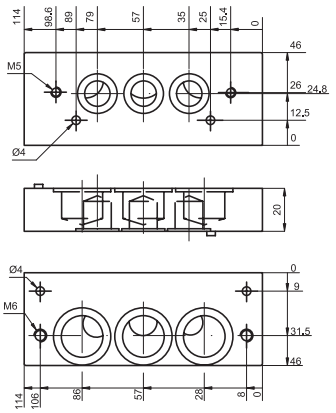

type: **SBA2C**
SBA2A

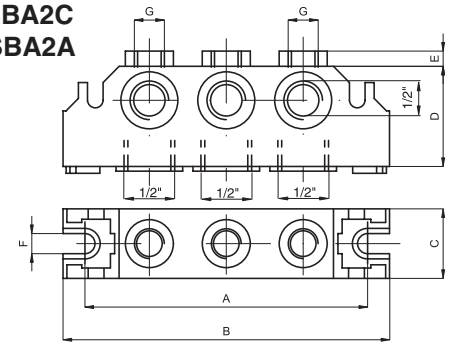

A	B	C	D	E	F	G
102	120	29	43	7	6,5	1/4”

GENERAL INDEX VALVES INDEX

Indirectly operated solenoid valves for water and steam

2/2, normally closed from 1/4” to 2”

Standard executions		
Version	Symbol	Type
With NBR seals (-10 °C ÷ + 90 °C)	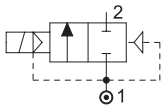	AEN22
With FKM seals (-10 °C ÷ + 130 °C)		AEV22
With EPDM seals EPDM (+ 140 °C)		AEP22

Ports			
1/4”	= 014	1”	= 100
3/8”	= 038	1 1/4”	= 114
1/2”	= 012	1 1/2”	= 112
3/4”	= 034	2”	= 200



Series of indirectly operated valves for fluids and compressed air, servoassisted with diaphragm.
Coils and connectors are to be ordered separately.

For the coils type ASA33/ASA32 see from page 2.200.20.
For the connectors type A122/A182 see page 2.210.20/2.210.30.

How to order: AEN22100

AEN22	100
Type	Port

For order codes see the table below.

Technical data	
Fluid	Compressed filtered air with or without lubrication, water and steam
Pressure range	25 bar
Fluid maximum viscosity	25 cSt (mm^2/s)
Orifice	See the table below
Flow	See the table below
Manual override	Two stable position, flat
Mounting	Better with the coil high
Materials	Body: Brass Seals: NBR - FKM - EPDM Internal parts: Stainless steel

Ports	Orifice mm	Flow m^3/h	Differential pressure bar			Power			Coil type	Order codes		
			Min	Max		AC (VA)		DC		NBR	FKM	EPDM
				AC	DC	Inrush	Rating	(Watt)				
1/4”	10	1,5	0,15	15	15	12	8	6,5	ASA33	035501	035511	035521
3/8”	12	2	0,15	15	15	12	8	6,5	ASA33	035502	035512	035522
1/2”	12	2,2	0,15	15	15	12	8	6,5	ASA33	035503	035513	035523
3/4”	18	5,2	0,15	13	13	12	8	6,5	ASA33	035504	035514	035524
1”	24	10,2	0,15	10	10	12	8	6,5	ASA33	035505	035515	035525
1 1/4”	38	18	0,15	10	10	20	15	10	ASA32	035506	035516	035526
1 1/2”	38	21	0,15	10	10	20	15	10	ASA32	035507	035517	035527
2”	50	36	0,15	10	10	20	15	10	ASA32	035508	035518	035528

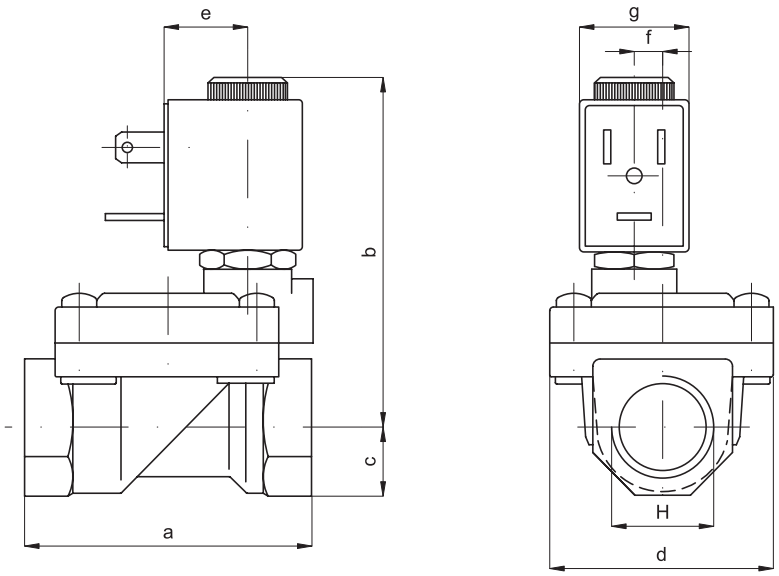

H	a	b	c	d	e	f	g	Weight kg.
1/4”	47	64	11	32	16	-	22	0,25
3/8”	60	73	14	45	16	6	22	0,45
1/2”	60	73	14	45	16	6	22	0,40
3/4”	75	75	18	55	20	8,5	22	0,66
1”	96	85	20	72	32	-	22	1,20
1” 1/4	144	95	28	102	45	-	30	3,20
1” 1/2	144	95	28	102	45	-	30	2,90
2”	152	119	35	119	48	-	30	4,50

Executions			
Version	Symbol	Code	Item
Electric flip-flop	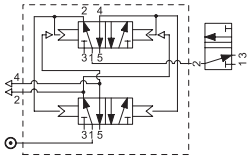	033170	AEF1520
Pneumatic flip-flop		033160	APF1520
Electric continuous cycling	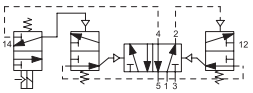	033172	AEC1520
Pneumatic continuous cycling		033171	APC1520

On request, they can be supplied according Directive 94/9/EC - **ATEX**
CE Ex II 2 GDc T5

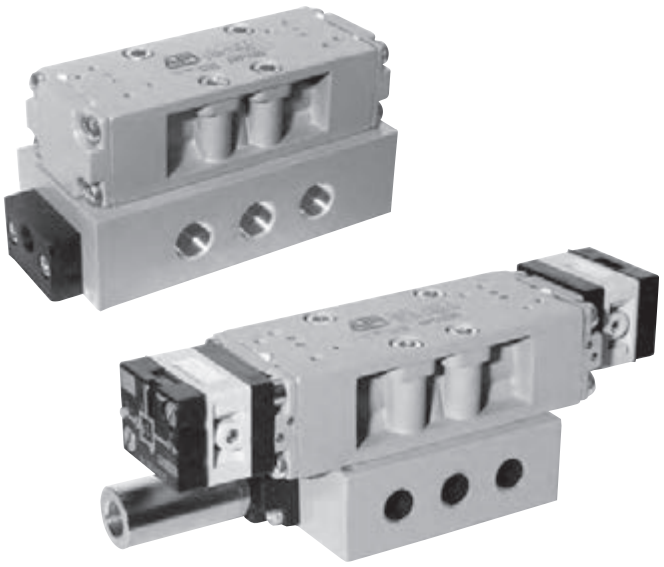

Series of integrated circuits, electrically or pneumatically operated.

Flip-flop: Circuit composed by a 1/4” power valve 5/2 two stable position. With the same signal applied twice at different times the cylinder carries out a complete cycle.

Continuous cycling: Circuit composed by a 1/8” power valve 5/2 single stable position. Keeping the signal the cylinder carries out continuous cycling till the signal is not interrupted.

Coils and connectors are to be ordered separately.
For the coils type ASA12.. see page 2.200.1.
For the connectors type A12209.. see page 2.210.20.

Technical data		
Fluid	Compressed filtered air with or without lubrication. Lubrication, if be used, must be continous.	
Pressure range	2,5 ÷ 10 bar	
Temperature range	-5 °C ÷ + 80°C	
Orifice	6 mm	8 mm
Flow	800 Nl/min	1200 Nl/min
Manual override	Two stable position, flat	
Response time	Energising: 20 ms	De-energising: 38 ms
Mounting	In any position	
Materials	Body: Painted die-cast aluminium Base: Profiled anodised aluminium Seals: Nitrile rubber (NBR)	

type: **APF1520**

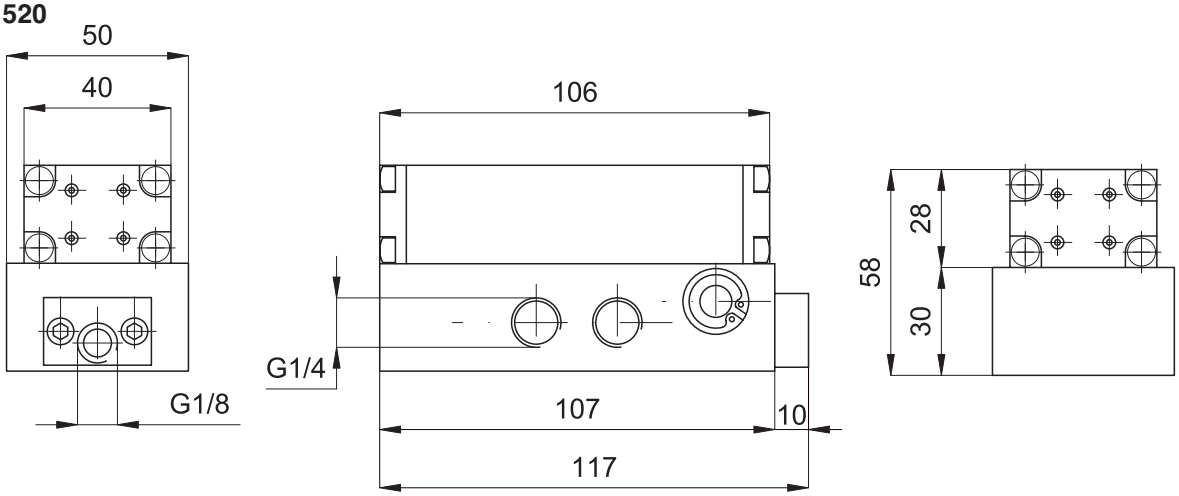

type: **AEF1520**

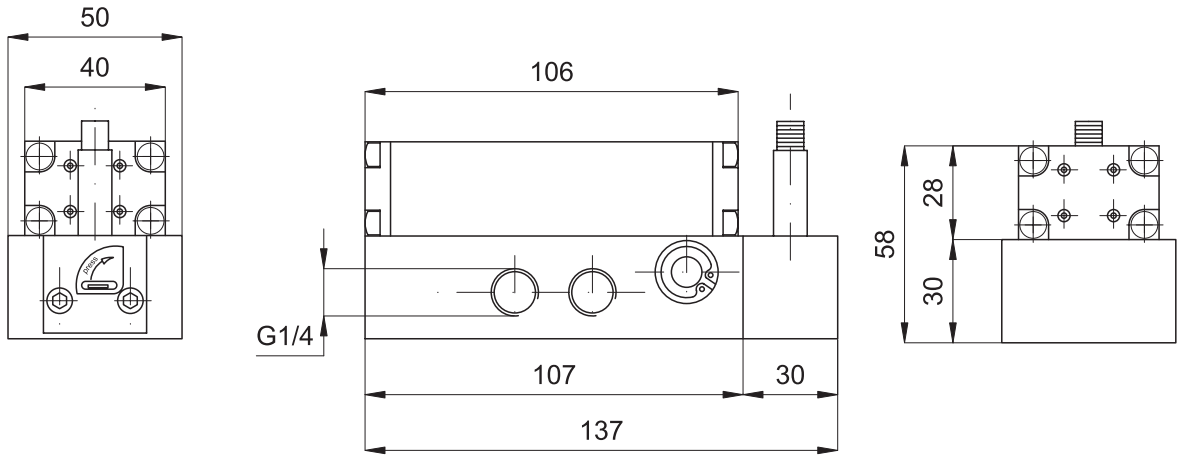

type: **APC1520**

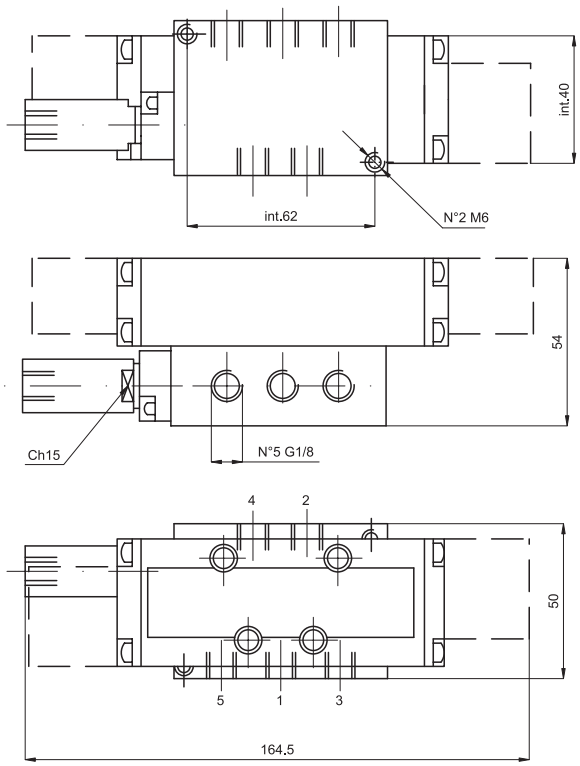

type: **AEC1520**

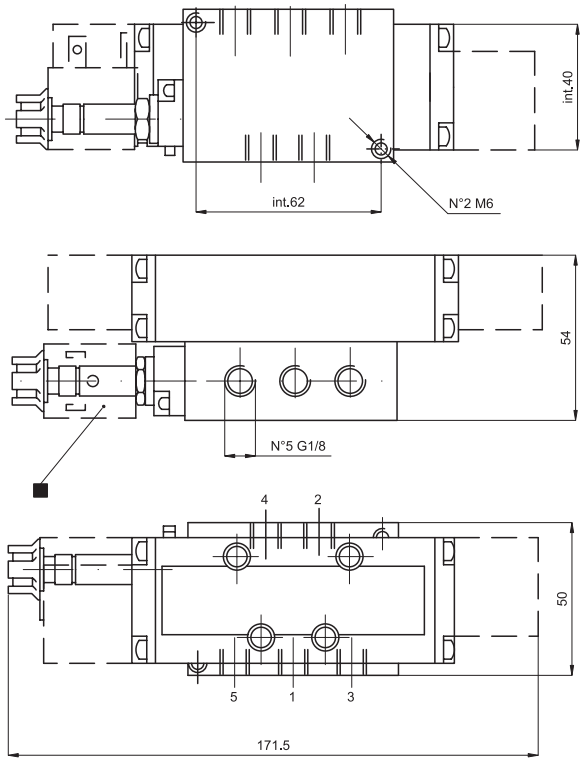

GENERAL INDEX
VALVES INDEX

Type **ASA12**

Series of coils with low electrical consumption conforming to EN 60204.1 and VDE 0580 standards, class F.
They can be mounted on the following valves: APA.. , AE14.. , AEF.. , AEC...
For the connectors type A122.. see page 2.210.20.

On request, they can be supplied according Directive 94/9/EC - **ATEX**
CE Ex II 3 GD

Voltage		Code	Item
12V	DC	032100	ASA1201200
12V	AC	032101	ASA1201250
24V	DC	032102	ASA1202400
24V	AC	032103	ASA1202450
48V	AC	032104	ASA1204850
110V	AC	032105	ASA1211050
230V	AC	032106	ASA1222050



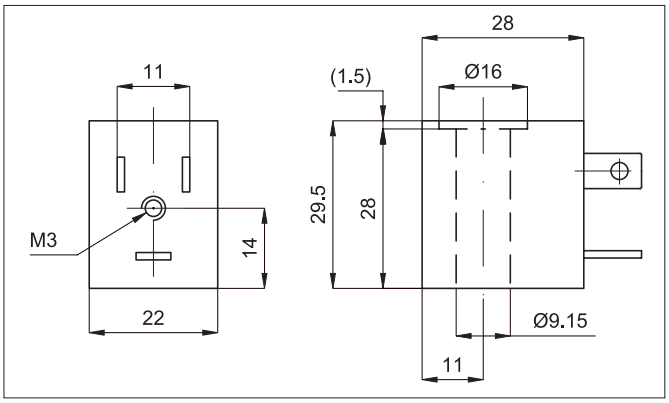

Technical data	Direct current	Alternating current
Voltage tolerance	± 10%	± 10%
Frequency tolerance	-	± 5%
Electrical consumption	3 W	4,2 VA
Voltage	12 e 24 V	12, 24, 48,110, 230 V 50/60HZ
Duty cycle	100% ED	
Class protection	IP 65 (with connector already mounted	
Temperature range	-20 °C ÷ + 50 °C	
Response time	10 ms	

Type **ASA18**

Series of coils with low electrical consumption and conforming to EN 60335.1 standards, class F.
They can be mounted on the following valves: AE15.. , AE18...

For the connectors type A052.. see page 2.210.1.

Voltage		Code	Item
12V	DC	034331	ASA1801200
12V	AC	034332	ASA1801250
24V	DC	034333	ASA1802400
24V	AC	034334	ASA1802450
48V	AC	034335	ASA1804850
110V	AC	034336	ASA1811050
230V	AC	034337	ASA1823050



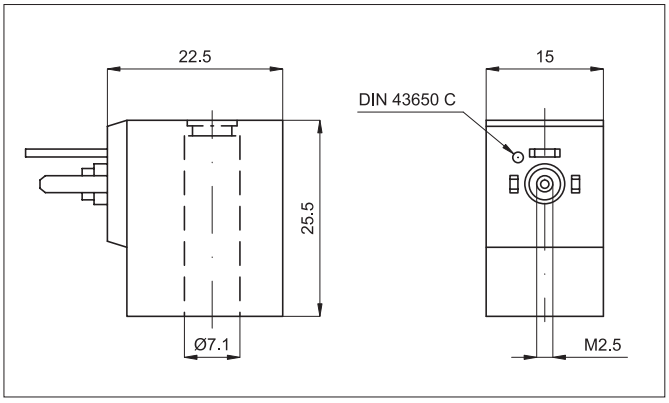

Technical data	Direct current	Alternating current
Voltage tolerance	± 10%	± 10%
Frequency tolerance	-	± 5%
Electrical consumption	1 W	2 / 1,7 VA (50/60HZ)
Voltage	12 e 24 V	12, 24, 48,110, 230 V 50/60HZ
Duty cycle	100% ED	
Class protection	IP 65 (with connector already mounted)	
Temperature range	-20 °C ÷ + 50 °C	
Response time	10 ms	

Type **ASA19**

Series of coils with low electrical consumption and conforming to EN 60204.1 and VDE 0580 standards, class F.
They can be mounted on the following valves: (AE18... out production).
For the connectors type A192.. see page 2.210.10.

Voltage		Code	Item
12V	DC	034281	ASA1901200
12V	AC	034282	ASA1901250
24V	DC	034283	ASA1902400
24V	AC	034284	ASA1902450
48V	AC	034285	ASA1904850
110V	AC	034286	ASA1911050
230V	AC	034287	ASA1922050



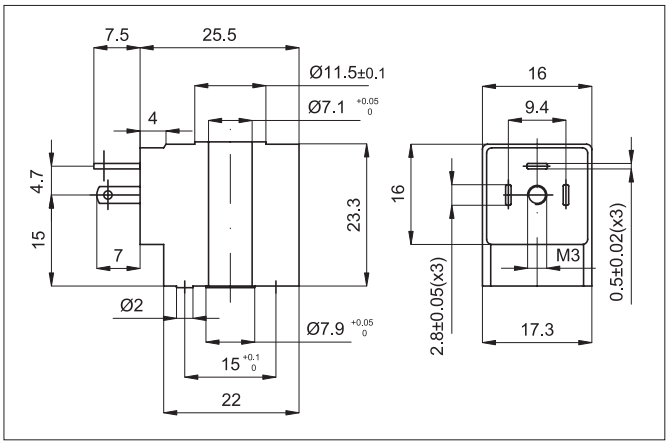

Technical data	Direct current	Alternating current
Voltage tolerance	± 10%	± 10%
Frequency tolerance	-	± 5%
Electrical consumption	1,5 W	3 VA
Voltage	12 e 24 V	12, 24, 48,110, 230 V 50/60HZ
Duty cycle	100% ED	
Class protection	IP 65 (with connector already mounted)	
Temperature range	-20 °C ÷ + 50 °C	
Response time	10 ms	

Type **ASA2**

Series of low consumption coils according EN 60204.1 and VDE 0580 standards, class F.
They can be used on the following valves: AE22.., AEA1.., AEA2...
For connectors type A182.. see page 2.210.30.

On request, they can be supplied according Directive 94/9/EC - **ATEX**
CE Ex **II 2 GD**

Voltage		Code	Item
12V	DC	032109	ASA201200
12V	AC	032110	ASA201250
24V	DC	032111	ASA202400
24V	AC	032112	ASA202450
48V	AC	032113	ASA204850
110V	AC	032114	ASA211050
230V	AC	032115	ASA222050



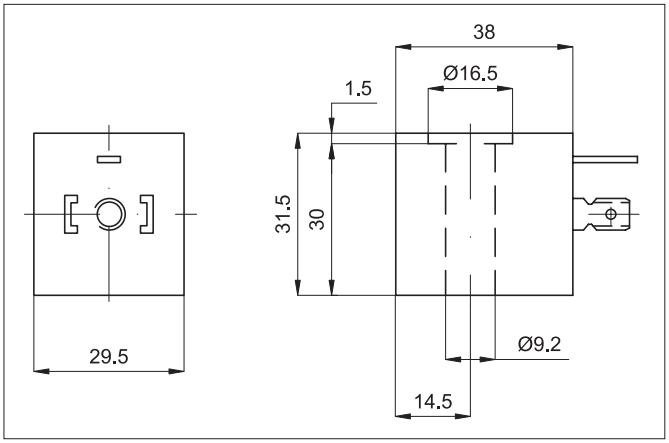

Technical data	Direct current	Alternating current
Voltage tolerance	± 10%	- 10 % ÷ + 15%
Frequency tolerance	-	± 5%
Electrical consumption	2,5 W	2,5 VA
Voltage	12 e 24 V	12, 24, 48,110, 230 V 50/60HZ
Duty cycle	100% ED	
Class protection	IP 65 (with connector already mounted)	
Temperature range	-20 °C ÷ + 50 °C	
Response time	10 ms	

Type **ASA33**

Type ASA33
Series of coils conforming to DIN 43650 standards.
They can be mounted on the following valves: AE..22, from 1/4" to 1".
For the connectors type A122.. see page 2.210.20.

Voltage		Code	Item
12V	DC	034311	ASA3301200
12V	AC	034312	ASA3301250
24V	DC	034313	ASA3302400
24V	AC	034314	ASA3302450
48V	AC	034315	ASA3304850
110V	AC	034316	ASA3311050
230V	AC	034317	ASA3323050



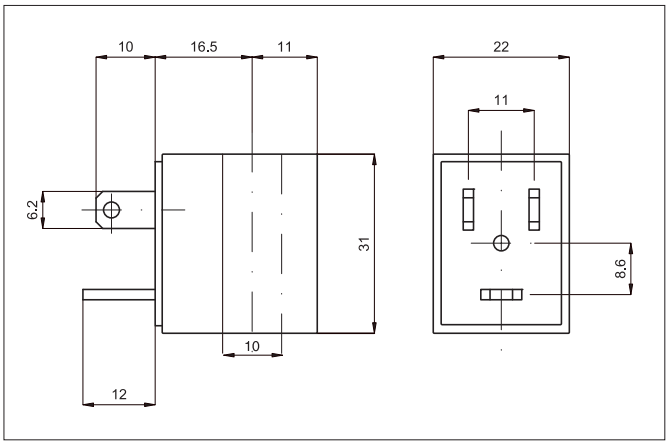

Technical data	Direct current	Alternating current
Voltage tolerance	± 10%	- 10% ÷ +15%
Frequency tolerance	-	± 5%
Electrical consumption	6,5 W	8 VA
Voltage	12 e 24 V	12, 24, 48,110, 230 V 50/60HZ
Duty cycle	100% ED	
Class protection	IP 65 (with connector already mounted)	
Temperature range	-20 °C ÷ + 50 °C	
Response time	10 ms	

Type **ASA32**

Series of coils conforming to DIN 43650/A standards.
They can be mounted on the following valves: AE..22, 1 1/4", 1 1/2", 2".

For the connectors type A182.. see page 2.210.30.

Voltage		Code	Item
12V	DC	034321	ASA3201200
12V	AC	034322	ASA3201250
24V	DC	034323	ASA3202400
24V	AC	034324	ASA3202450
48V	AC	034325	ASA3204850
110V	AC	034326	ASA3211050
230V	AC	034327	ASA3223050



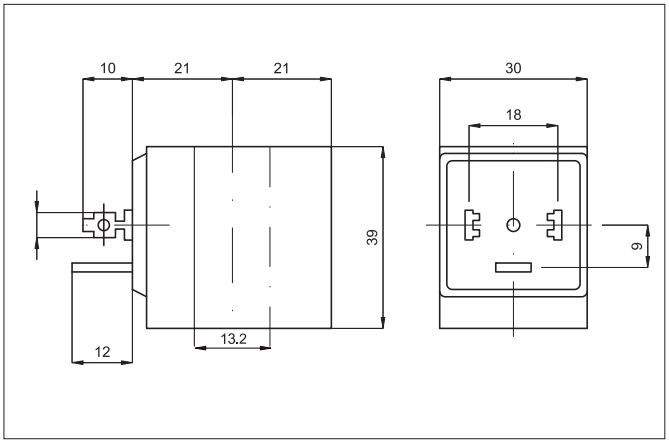

Technical data	Direct current	Alternating current
Voltage tolerance	± 10%	- 10% ÷ +15%
Frequency tolerance	-	± 5%
Electrical consumption	10 W	15 VA
Voltage	12 e 24 V	12, 24, 48,110, 230 V 50/60HZ
Duty cycle	100% ED	
Class protection	IP 65 (with connector already mounted)	
Temperature range	-20 °C ÷ + 50 °C	
Response time	10 ms	

Standard executions		
Version	Code	Item
Standard, black	033501	A05207N
Standard, black, cabled	033502	A05207NK
With LED+VDR, transparent, 24 V, AC-DC	033503	A05207T1
With LED+VDR, transparent, 115 V, AC-DC	033504	A05207T2
With LED+VDR, transparent, 230 V, AC-D C	033505	A05207T3
With LED+VDR, black cabled, 24 V, AC-DC	033506	A05207N1K
With LED+VDR, black cabled, 115 V, AC-DC	033507	A05207N2K
With LED+VDR, black cabled 230 V, AC-DC	033508	A05207N3K

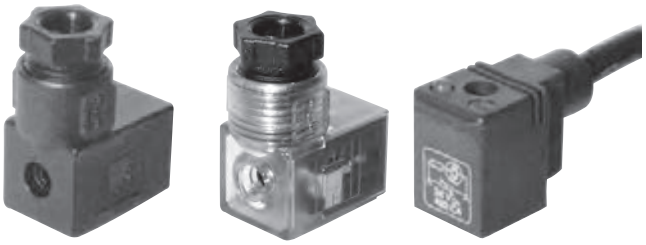

Series of connectors conforming to DIN 43650/C for electropilots type AE05 and coils ASA18.
In the standard version they are provided with fixing screws and NBR profiled seal.
In the provided versions the colour of the LED is yellow.

type: **A05207N**
A05207T

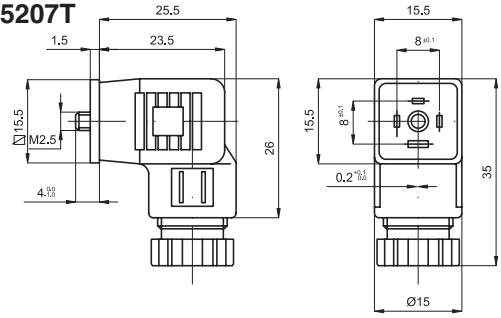

type: **A05207NK**

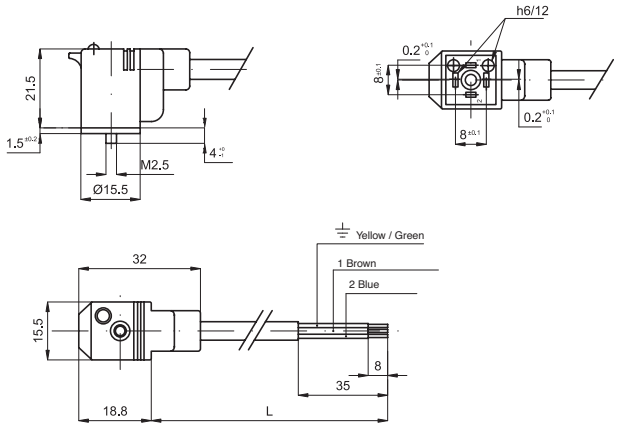

Data of the standard cable	
Lenght	2 m
Material	Self-extinguishing polypropylene
Colour	Grey
Wires colour	Conforming to ENEL 0722 standards
External diameter	5,5 mm
Insulation	300 V
Temperature range	- 5 °C ÷ + 70 °C
Standard	CEI 2022 II OR
Wire section	3x0,5 mm²

Technical data	Standard	Transparent with circuit	Moulding
Contact distance	8 mm	8 mm	8 mm
Nominal voltage	AC max 250 V; DC max 300 V	250 V	250 V
Nominal current	6 A	6 A	-
Maximum current on contacts	10 A	10 A	-
Maximum current	-	-	3 A
Contact resistance	≤ 4 m Ohm	≤ 4 m Ohm	≤ 4 m Ohm
Maximum conductor section	0,75 mm²	0,75 mm²	-
Gland size option	Pg 07	Pg 07	-
Protection class	IP 65 EN 60529	IP 65 EN 60529	IP 65 EN 60529
Insulation class	VDE 0110 - 1/89	VDE 0110 - 1/89	VDE 0110 - 1/89
Temperature range	- 40°C ÷ + 90 °C	- 40°C ÷ + 90 °C	- 40°C ÷ + 90 °C
Earth contact (number)	1	1	2, connected (6/12 pos.)
Poles	2	2	2

GENERAL INDEX VALVES INDEX

Standard executions		
Version	Code	Item
Standard, black	032117	A19207N
Standard, black, cabled	033511	A19207NK
With LED+VDR, transparent, 24 V, AC-DC	032201	A19207T1
With LED+VDR, transparent, 115 V, AC-DC	032202	A19207T2
With LED+VDR, transparent, 230 V, AC-DC	032203	A19207T3
With LED+VDR, black cabled, 24 V, AC-DC	033512	A19207N1K
With LED+VDR, black cabled, 115 V, AC-DC	033513	A19207N2K
With LED+VDR, black cabled, 230 V, AC-DC	033514	A19207N3K



Series of connectors for coils ASA19.
In the standard version they are provided with fixing screw and NBR profiled seal.
In the provided versions the colour of the LED is yellow.

type: **A19207N**
A19207T

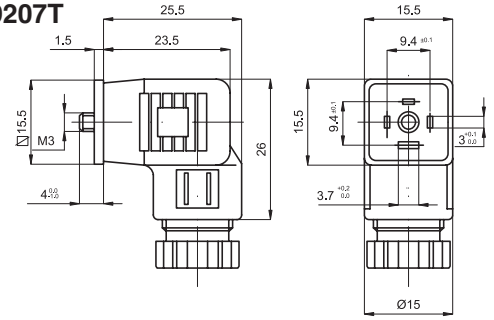

Data of the standard cable	
Length	2 m
Material	Self-extinguishing polypropylene
Colour	Grey
Wires colour	Conforming to ENEL 0722 standards
External diameter	5,5 mm
Insulation	300 V
Temperature range	- 5 °C ÷ + 70 °C
Standard	CEI 2022 II OR
Wire section	3x0,5 mm²

type: **A19207NK**

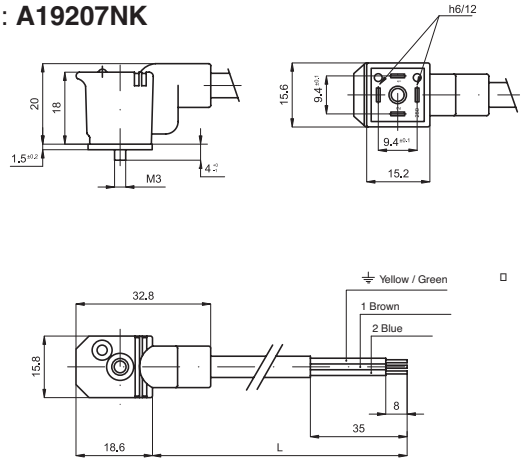

Technical data	Standard	Transparent with circuit	Moulding
Contact distance	9,4 mm	9,4 mm	9,4 mm
Nominal voltage	AC max 250 V; DC max 300 V	250 V	250 V
Nominal current	6 A	6 A	-
Maximum current on contacts	10 A	10 A	-
Maximum current	-	-	3 A
Contact resistance	≤ 4 m Ohm	≤ 4 m Ohm	≤ 4 m Ohm
Maximum conductor section	0,75 mm²	0,75 mm²	-
Gland size option	Pg 07	Pg 07	-
Protection class	IP 65 EN 60529	IP 65 EN 60529	IP 65 EN 60529
Insulation class	VDE 0110 - 1/89	VDE 0110 - 1/89	VDE 0110 - 1/89
Temperature range	- 40°C ÷ + 90 °C	- 40°C ÷ + 90 °C	- 40°C ÷ + 90 °C
Earth contact (number)	1	1	2, connected (6/12 pos.)
Poles	2	2	2

Standard executions		
Version	Code	Item
Standard, black	032118	A12209N
Standard, black, cabled	033521	A12209NK
With LED+VDR, transparent, 24 V, AC-DC	032204	A12209T1
With LED+VDR, transparent,115 V, AC-DC	032205	A12209T2
With LED+VDR, transparent, 230 V, AC-DC	032206	A12209T3
With LED+VDR, black, 2 mt. cabled, 24 V, AC-DC	033522	A12209N1K
With LED+VDR, black, 2 mt. cabled, 115 V, AC-DC	033523	A12209N2K
With LED+VDR, black, 2 mt. cabled, 230 V, AC-DC	033524	A12209N3K

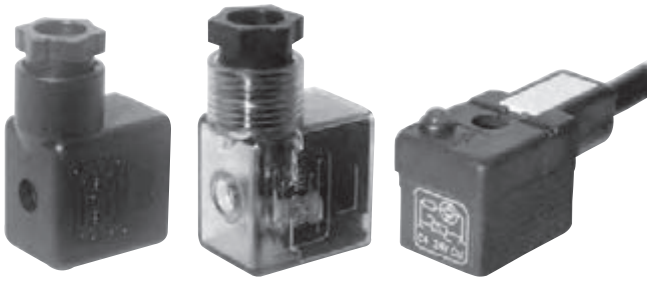

Series of connectors conforming to DIN 43650 standards for coils type ASA12.
In the standard version they are provided with fixing screw and NBR profiled seal.
Yellow LED as standard.

type: **A12209N**
A12209T

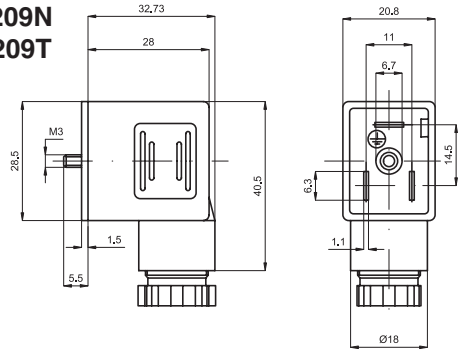

type: **A12209NK**

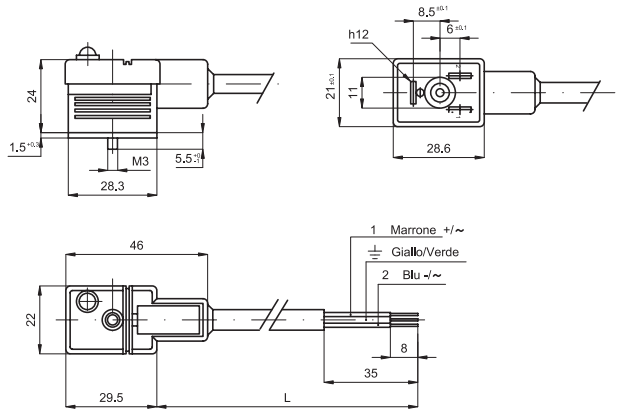

Data of the standard cable	
Length	2 m
Material	Self-extinguishing polypropylene
Colour	Grey
Wires colour	Conforming to ENEL 0722 standards
External diameter	7,3 mm.
Insulation	300 V
Temperature range	- 5 °C ÷ + 70 °C
Standard	CEI 2022 II OR
Wire section	3x1 mm²

Technical data	Standard	Transparent with circuit	Moulding
Contact distance	11 mm	11 mm	11 mm
Nominal voltage	AC max 250 V; DC max 300 V	250 V	250 V
Nominal current	10 A	10 A	-
Maximum current on contacts	16 A	16 A	-
Maximum current	-	-	5 A
Contact resistance	≤ 4 m Ohm	≤ 4 m Ohm	≤ 4 m Ohm
Maximum conductor section	1,5 mm²	1,5 mm²	-
Gland size option	Pg 09	Pg 09	-
Protection class	IP 65 EN 60529	IP 65 EN 60529	IP 65 EN 60529
Insulation class	VDE 0110 - 1/89	VDE 0110 - 1/89	VDE 0110 - 1/89
Temperature range	- 40°C ÷ + 90 °C	- 40°C ÷ + 90 °C	- 40°C ÷ + 90 °C
Earth contact (number)	1	1	2, connected (6/12 pos.)
Poles	2	2	2

GENERAL INDEX VALVES INDEX

Standard executions		
Version	Code	Item
Standard, black	032119	A18209N
Standard, black, cabled	033531	A18209NK
With LED+VDR, transparent, 24 V, AC-DC	032207	A18209T1
With LED+VDR, transparent, 115 V, AC-DC	032208	A18209T2
With LED+VDR, transparent, 230 V, AC-DC	032209	A18209T3
With LED+VDR, black, 2 mt. cabled, 24 V, AC-DC	033532	A18209N1K
With LED+VDR, black, 2 mt. cabled, 115 V, AC-DC	033533	A18209N2K
With LED+VDR, black, 2 mt. cabled, 230 V, AC-DC	033534	A18209N3K



Series of connectors conforming to DIN 43650 - A/ISO 4400 standards for coils type ASA12.
In the standard version they are provided with fixing screw and NBR profiled seal.
In the provided versions the colour of the LED is yellow.

type: **A18209N**
A18209T

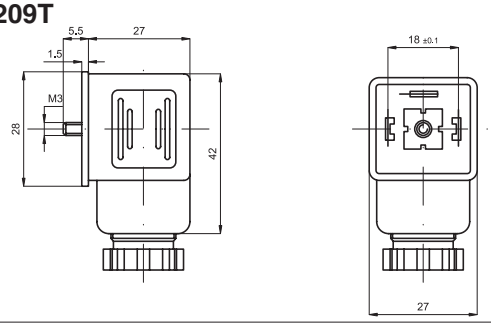

Data of the standard cable	
Length	2 m
Material	Self-extinguishing polypropylene
Colour	Grey
Wires colour	Conforming to ENEL 0722 standards
External diameter	7,3 mm
Insulation	300 V
Temperature range	- 5 °C ÷ + 70 °C
Standard	CEI 2022 II OR
Wire section	3x1 mm²

type: **A18209NK**

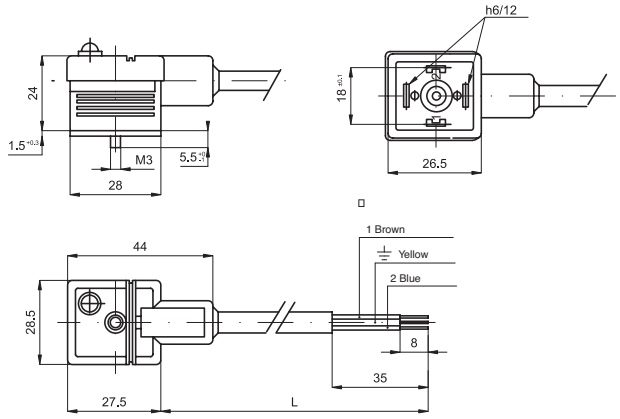

Technical data	Standard	Transparent with circuit	Moulding
Contact distance	18 mm	18 mm	18 mm
Nominal voltage	AC max 250 V; DC max 300 V	250 V	250 V
Nominal current	10 A	10 A	-
Maximum current on contacts	16 A	16 A	-
Maximum current	-	-	5 A
Contact resistance	≤ 4 m Ohm	≤ 4 m Ohm	≤ 4 m Ohm
Maximum conductor section	1,5 mm²	1,5 mm²	-
Gland size option	Pg 09	Pg 09	-
Protection class	IP 65 EN 60529	IP 65 EN 60529	IP 65 EN 60529
Insulation class	VDE 0110 - 1/89	VDE 0110 - 1/89	VDE 0110 - 1/89
Temperature range	- 40°C ÷ + 90 °C	- 40°C ÷ + 90 °C	- 40°C ÷ + 90 °C
Earth contact (number)	1	1	2, connected (6/12 pos.)
Poles	2	2	2

Notes

GENERAL INDEX VALVES INDEX

Executions

Version	Symbol	Code	Item
3/2 NC side lever, 1 position	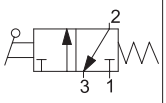	034071	A1MA130LL
3/2 side lever, 2 positions	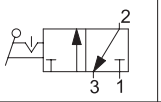	034070	A1MA132LL
3/2 top lever, 2 positions	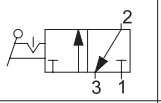	034082	A1MA132LT
3/2 NC push-pull, 1 position	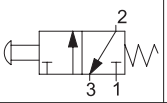	034083	A1MA130TT
3/2 push-pull, 2 positions	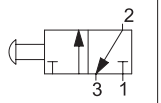	034084	A1MA132TT
3/2 NC red head push button, 1 position	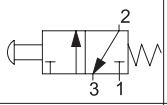	034085	A1MA130FR
3/2 NC green head push button, 1 position	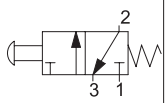	034086	A1MA130FV
3/2 NC black head push button, 1 position	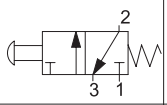	034087	A1MA130FN
3/2 NC red recessed button, 1 position	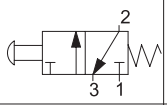	034088	A1MA130BR
3/2 NC green recessed button, 1 position	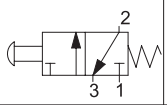	034089	A1MA130BV
3/2 NC black recessed button, 1 position	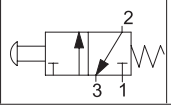	034090	A1MA130BN



Series of spool valves, with static seals, high flow, for panel or sub-base mounting.

Code key

Series	Actuation	Size	Function	Actuation
A1	MA=Manual	1 = 1/8" 2 = 1/4"	30 = 3/2 NC spring return 32 = 3/2 two stable positions 50 = 5/2 spring return 51 = 5/2 two stable positions 70 = 5/3 CC spring return 71 = 5/3 CA spring return 72 = 5/3 CP spring return 73 = 5/3 CC 3 positions 74 = 5/3 CA 3 positions 75 = 5/3 CP 3 positions	LL = side lever LT = top lever TT = push-pull FR = red head push botton FV = green head push botton FN = black head push botton BR = red recessed botton BV = green recessed botton BN = black recessed botton

On request, they can be supplied according Directive 94/9/EC - **ATEX**
CE Ex II 2 GDc T5

Technical data

Fluid	Compressed filtered air with or without lubrication. Lubrication, if be used, must be continous.
Pressure range	0 ÷ 10 bar
Temperature range	-10 °C ÷ + 80°C
Orifice	6,5 mm
Flow	650 Nl/min at 6 bar with ΔP 1 bar
Mounting	In any position
Materials	Body: Aluminium Cover: Aluminium Bottom plates: Plastic Spool: Chemical nickel plated aluminium Distancers: Plastic Seals: Nitrile rubber (NBR) Lever: Steel

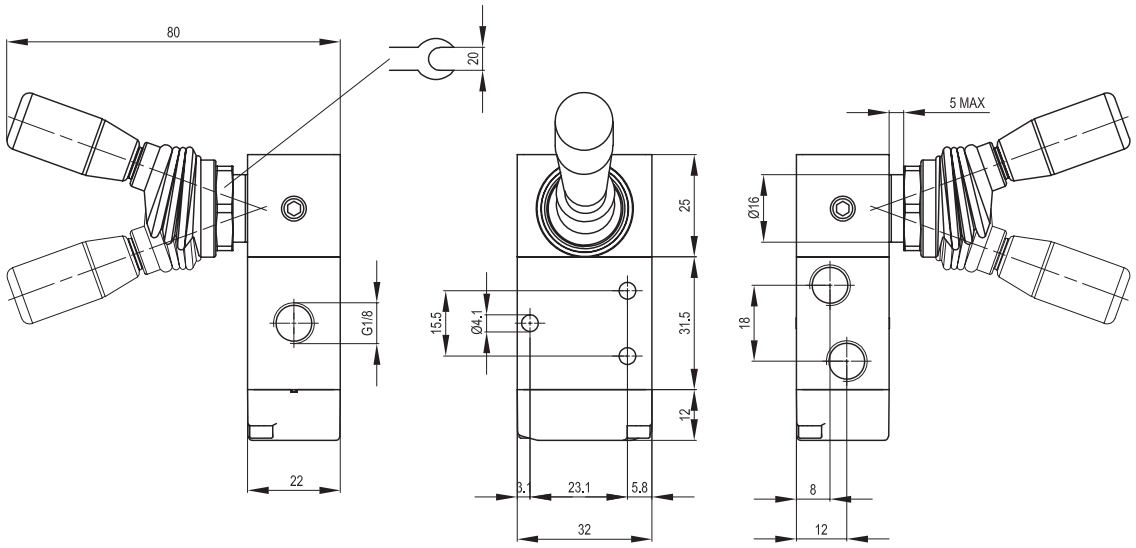

Version	Symbol	Code	Item
3/2 NC side lever, 1 position	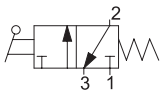	034071	A1MA130LL
3/2 side lever, 2 positions	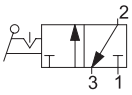	034070	A1MA132LL

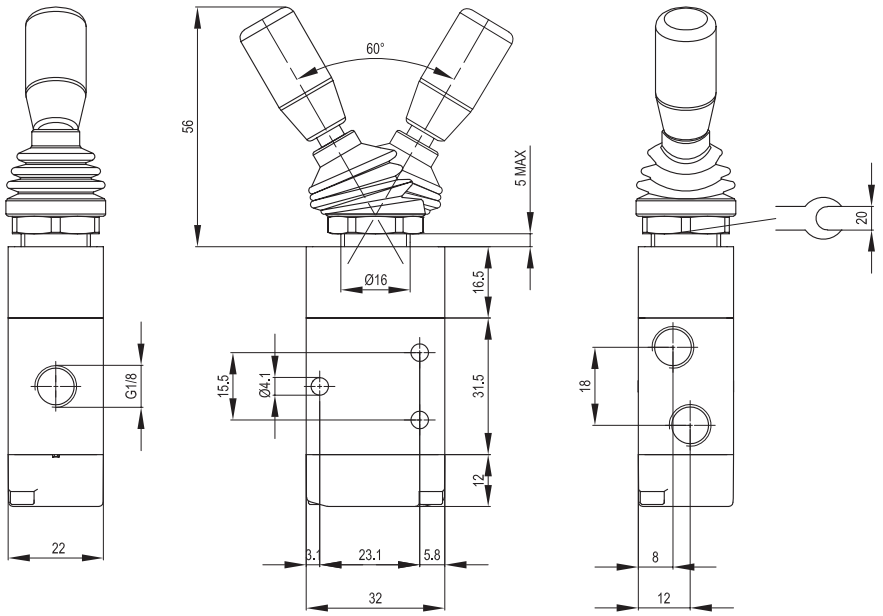

Version	Symbol	Code	Item
3/2 top lever, 2 positions	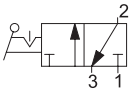	034082	A1MA132LT

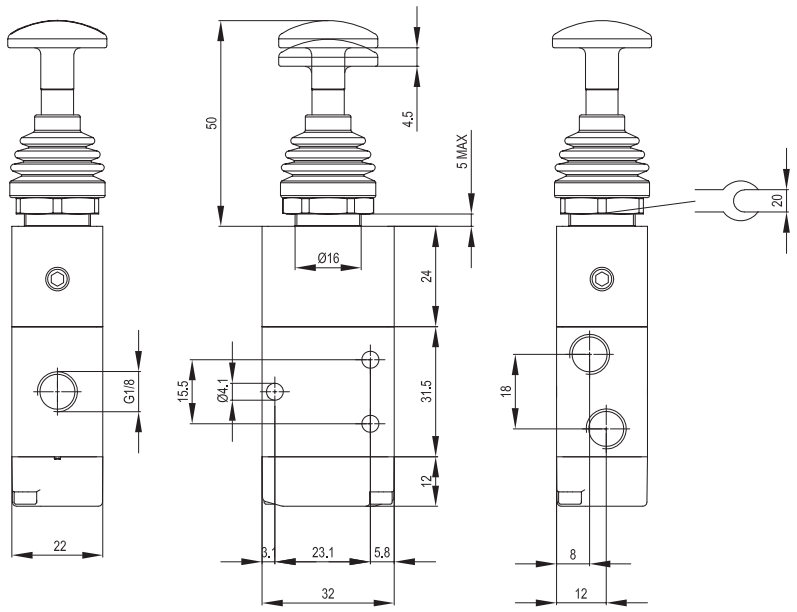

Version	Symbol	Code	Item
3/2 NC push-pull, 1 position	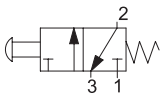	034083	A1MA130TT
3/2 push-pull, 2 positions	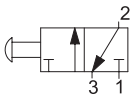	034084	A1MA132TT

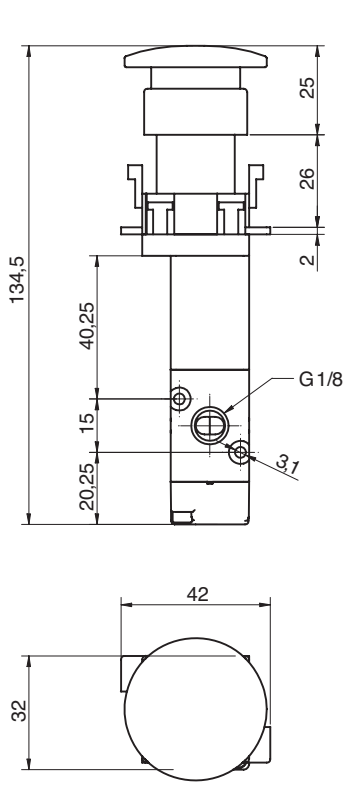

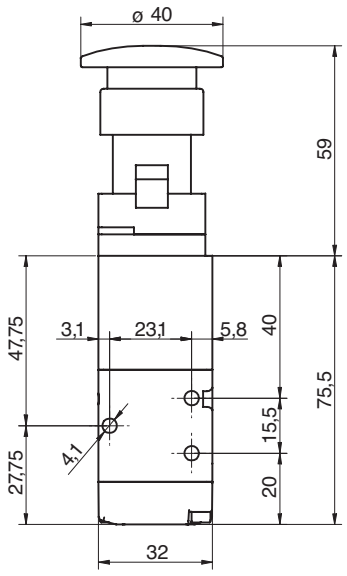

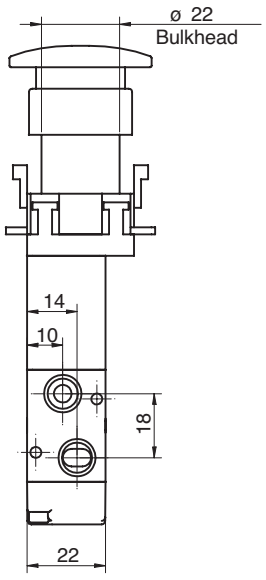

Version	Symbol	Code	Item
3/2 NC red head push-button, 1 position	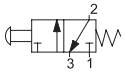	034085	A1MA130FR
3/2 NC green head push-button, 1 position	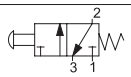	034086	A1MA130FV
3/2 NC black head push-button, 1 position	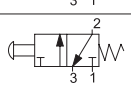	034087	A1MA130FN

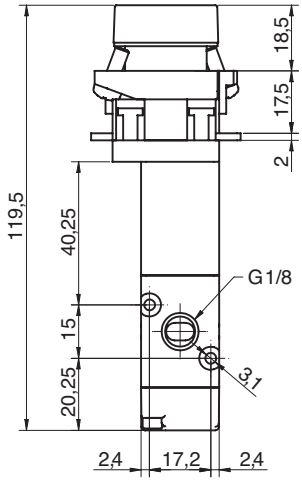

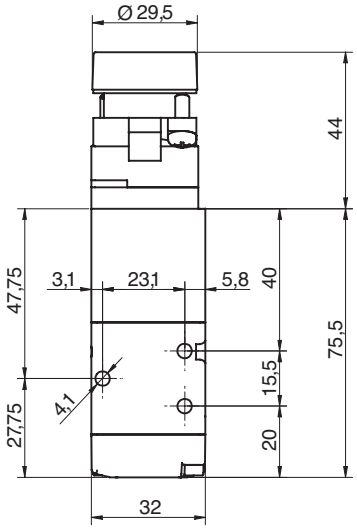

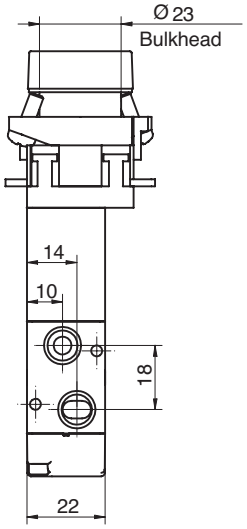

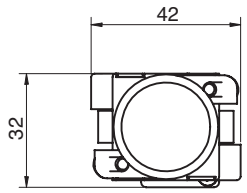

Version	Symbol	Code	Item
3/2 NC red recessed button, 1 position	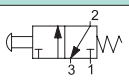	034088	A1MA130BR
3/2 NC green recessed button, 1 position	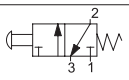	034089	A1MA130BV
3/2 NC black recessed button, 1 position	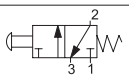	034090	A1MA130BN

Executions			
Version	Symbol	Code	Item
5/2 side lever 1 position	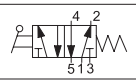	034064	A1MA150LL
5/2 side lever 2 positions	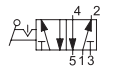	034063	A1MA151LL
5/3 side lever closed centres, 1 position	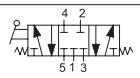	034062	A1MA170LL
5/3 side lever open centres, 1 position	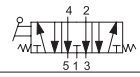	034066	A1MA171LL
5/3 side lever pressurised centres, 1 position	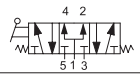	034065	A1MA172LL
5/3 side lever closed centres, 3 positions	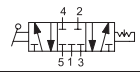	034068	A1MA173LL
5/3 side lever open centres, 3 positions	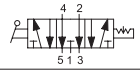	034067	A1MA174LL
5/3 side lever pressurised centres, 3 positions	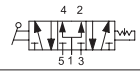	034069	A1MA175LL
5/2 top lever 2 positions	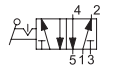	034091	A1MA151LT
5/2 push-pull 1 position	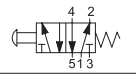	034092	A1MA150TT
5/2 push-pull 2 positions	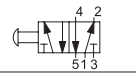	034093	A1MA151TT
5/2 red head push button, 1 position	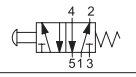	034094	A1MA150FR
5/2 green head push button, 1 position	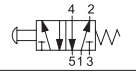	034095	A1MA150FV
5/2 black head push button, 1 position	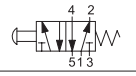	034096	A1MA150FN
5/2 red recessed button, 1 position	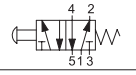	034097	A1MA150BR
5/2 green recessed button, 1 position	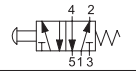	034098	A1MA150BV
5/2 black recessed button, 1 position	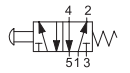	034099	A1MA150BN







Series of spool valves, with static seals, high flow, for panel or sub-base mounting.

Code key

Series	Actuation	Size	Function	Actuation
A1	MA=Manual	1 = 1/8" 2 = 1/4"	30 = 3/2 NC spring return 32 = 3/2 two stable positions 50 = 5/2 spring return 51 = 5/2 two stable positions 70 = 5/3 CC spring return 71 = 5/3 CA spring return 72 = 5/3 CP spring return 73 = 5/3 CC 3 positions 74 = 5/3 CA 3 positions 75 = 5/3 CP 3 positions	LL = side lever LT = top lever TT = push-pull FR = red head push botton FV = green head push botton FN = black head push botton BR = red recessed botton BV = green recessed botton BN = black recessed botton

On request, they can be supplied according Directive 94/9/EC - **ATEX**
CE Ex **II 2 GDc T5**

Technical data		
Fluid	Compressed filtered air with or without lubrication. Lubrication, if be used, must be continous.	
Pressure range	0 ÷ 10 bar	
Temperature range	-10 °C ÷ + 80°C	
Orifice	6,5 mm	
Flow	650 Nl/min at 6 bar with ΔP 1 bar	
Mounting	In any position	
Materials	Body:	Aluminium
	Cover:	Aluminium
	Bottom plates:	Plastic
	Spool:	Chemical nickel plated aluminium
	Distancers:	Plastic
	Seals:	Nitrile rubber (NBR)
	Lever:	Steel

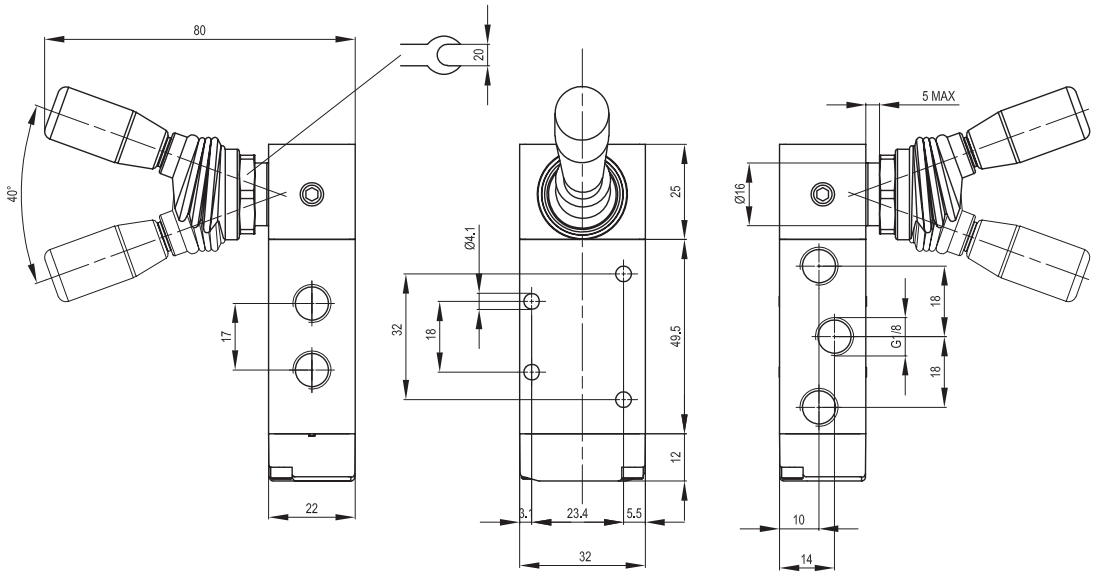

Version	Symbol	Code	Item
5/2 side lever, 1 position	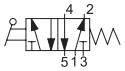	034064	A1MA150LL
5/2 side lever, 2 positions		034063	A1MA151LL

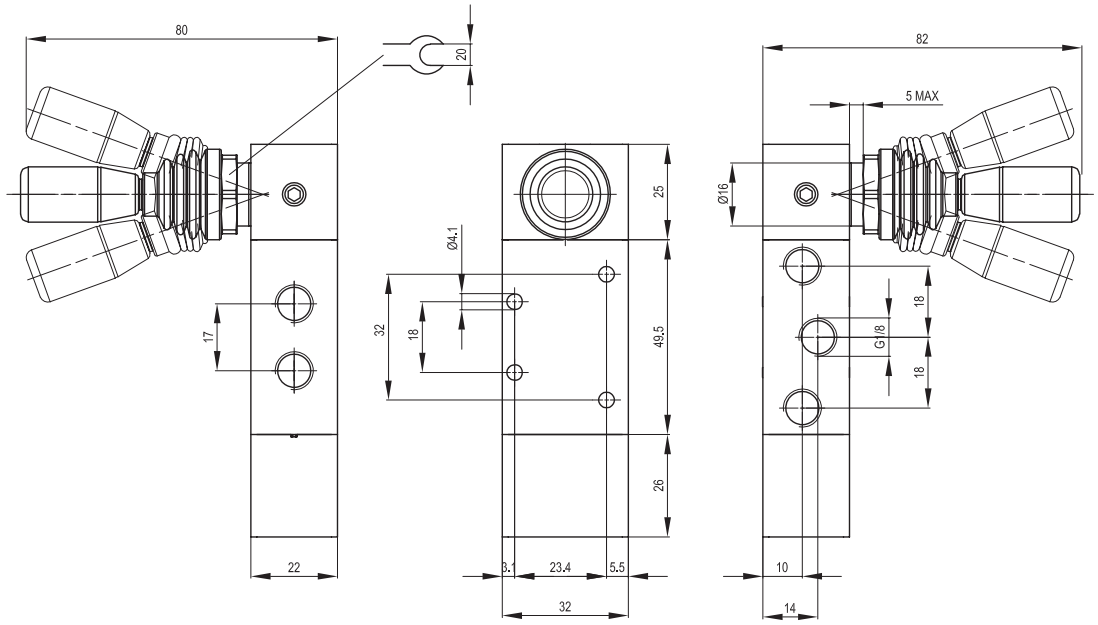

Version	Symbol	Code	Item
5/3 side lever, closed centres, 1 position	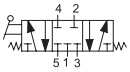	034062	A1MA170LL
5/3 side lever, open centres, 1 position	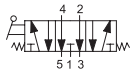	034066	A1MA171LL
5/3 side lever, pressurised centres, 1 position	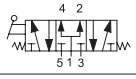	034065	A1MA172LL

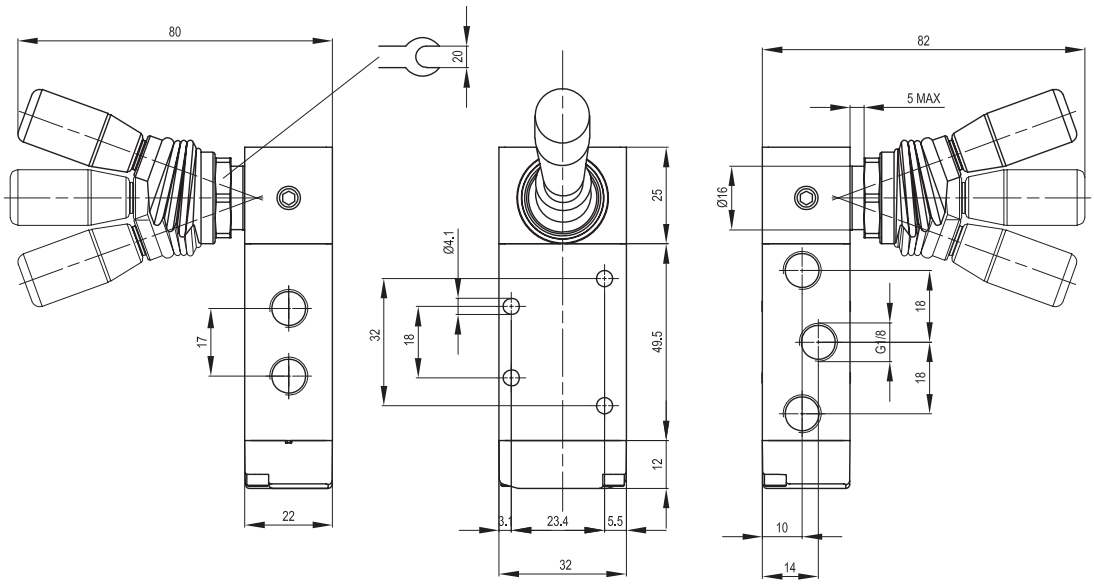

Version	Symbol	Code	Item
5/3 side lever, closed centres, 3 positions	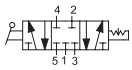	034068	A1MA173LL
5/3 side lever, open centres, 3 positions	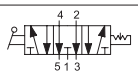	034067	A1MA174LL
5/3 side lever, pressurised centres, 3 positions	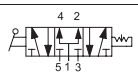	034069	A1MA175LL

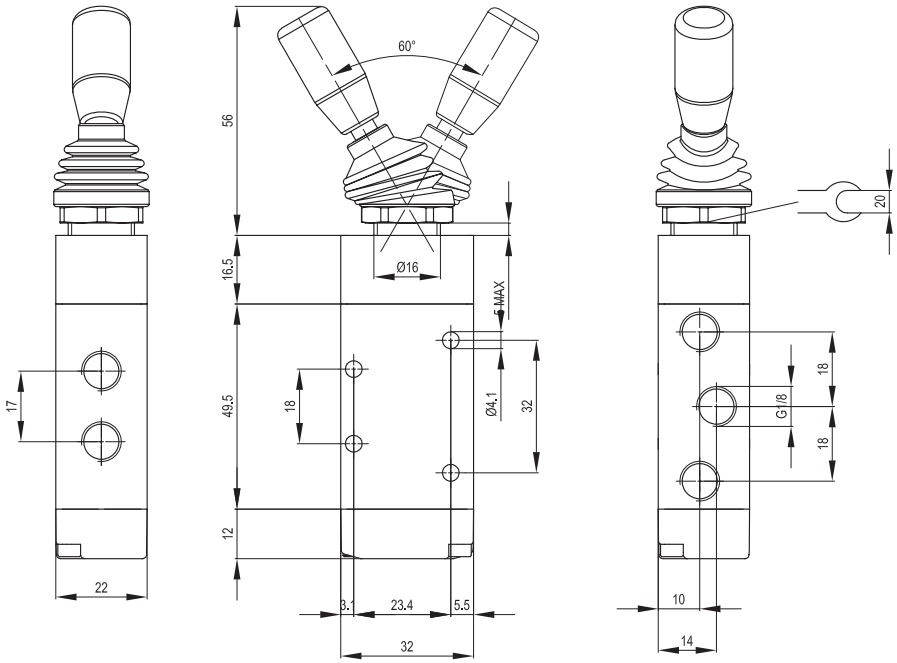

Versione	Version	Symbol	Code
5/2 top lever, 2 positions	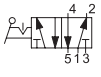	034091	A1MA151LT

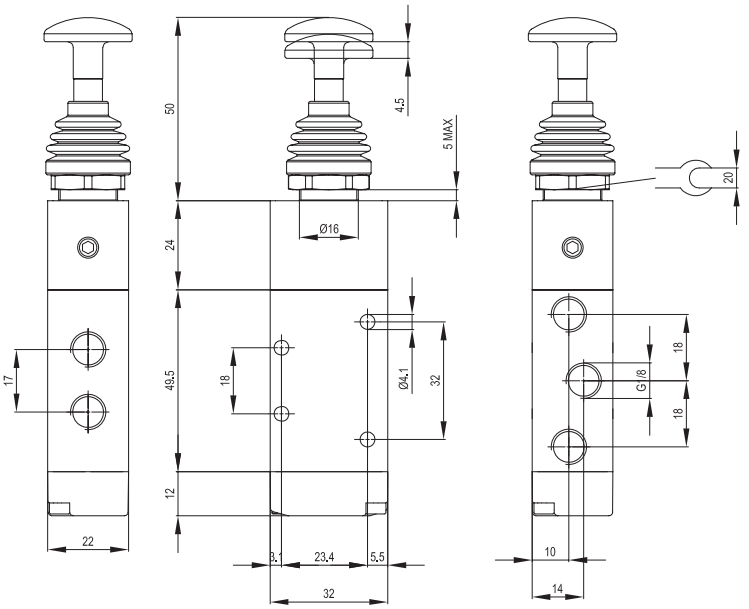

Version	Symbol	Code	Item
5/2 push-pull, 1 position	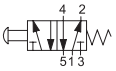	034092	A1MA150TT
5/2 push-pull, 2 positions		034093	A1MA151TT

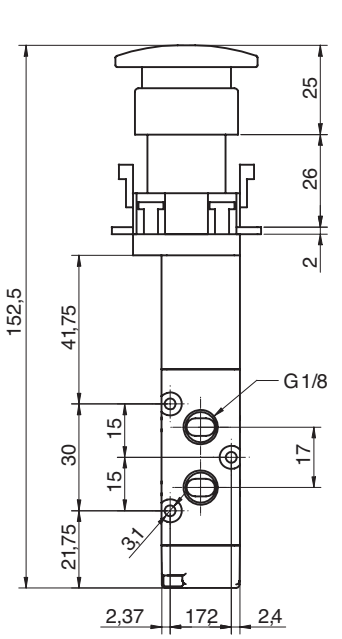

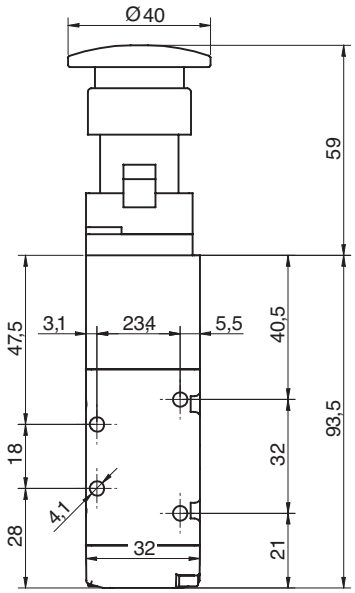

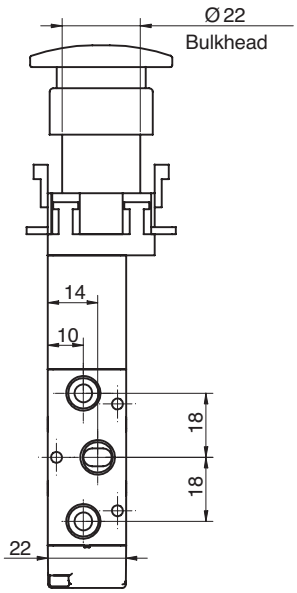

Version	Symbol	Code	Item
5/2 red head, push button, 1 position	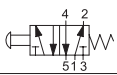	034094	A1MA150FR
5/2 green head, push button, 1 position	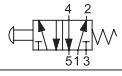	034095	A1MA150FV
5/2 black head, push button, 1 position	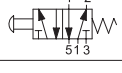	034096	A1MA150FN

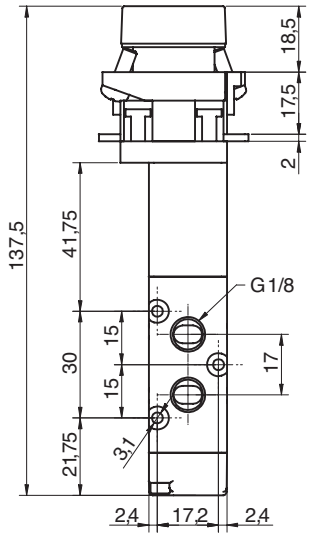

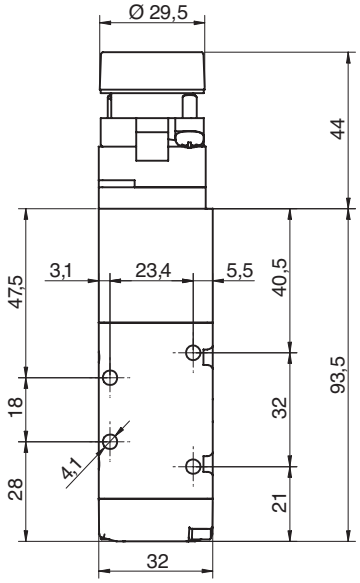

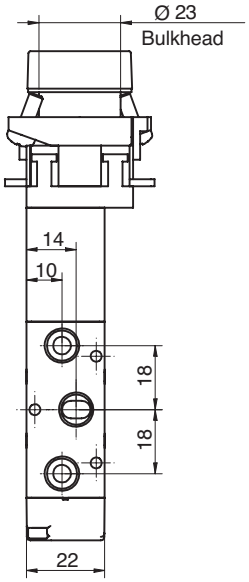

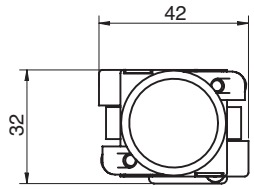

Version	Symbol	Code	Item
5/2 red recessed button, 1 position	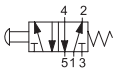	034097	A1MA150BR
5/2 green recessed button, 1 position	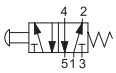	034098	A1MA150BV
5/2 black recessed button, 1 position	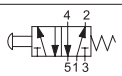	034099	A1MA150BN

Valves series A1

1/4", 3/2, manually operated

Executions			
Version	Symbol	Code	Item
3/2 NC side lever, 1 position	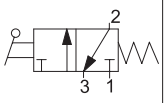	034077	A1MA230LL
3/2 side lever, 2 positions	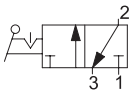	034076	A1MA232LL
3/2 top lever, 2 positions	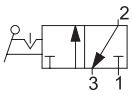	034100	A1MA232LT
3/2 NC push-pull, 1 position	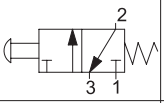	034103	A1MA230TT
3/2 push-pull, 2 positions	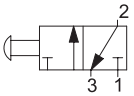	034104	A1MA232TT



Series of spool valves, with static seals, high flow, for panel or sub-base mounting.

On request, they can be supplied according Directive 94/9/EC - **ATEX**

CE Ex II 2 GDc T5

Code key

Series	Actuation	Size	Function	Actuation
A1	MA=Manual	1 = 1/8" 2 = 1/4"	30 = 3/2 NC spring return 32 = 3/2 two stable positions 50 = 5/2 spring return 51 = 5/2 two stable positions 70 = 5/3 CC spring return 71 = 5/3 CA spring return 72 = 5/3 CP spring return 73 = 5/3 CC 3 positions 74 = 5/3 CA 3 positions 75 = 5/3 CP 3 positions	LL = side lever LT = top lever TT = push-pull FR = red head push botton FV = green head push botton FN = black head push botton BR = red recessed botton BV = green recessed botton BN = black recessed botton

Technical data	
Fluid	Compressed filtered air with or without lubrication. Lubrication, if be used, must be continous.
Pressure range	0 ÷ 10 bar
Temperature range	-10 °C ÷ + 80°C
Orifice	8 mm
Flow	1100 Nl/min at 6 bar with ΔP 1 bar
Mounting	In any position
Materials	Body: Aluminium Cover: Aluminium Bottom plates: Plastic Spool: Chemical nickel plated aluminium Distancers: Plastic Seals: Nitrile rubber (NBR) Lever: Steel

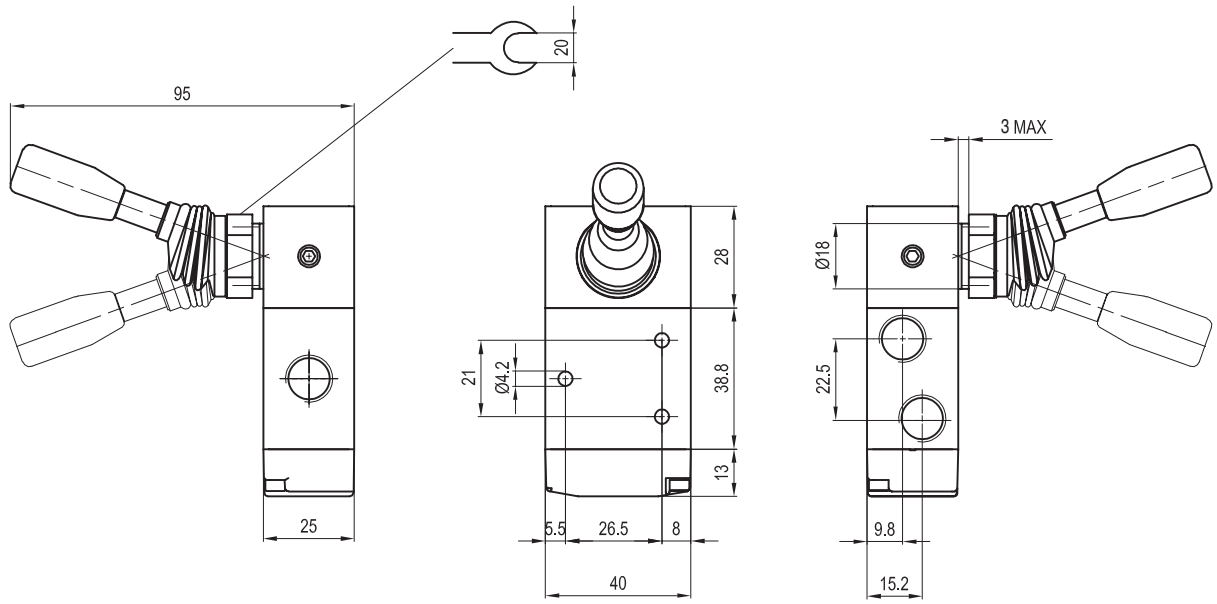

Version	Symbol	Code	Item
3/2 NC side lever, 1 position	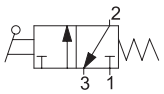	034077	A1MA230LL
3/2 side lever, 2 positions	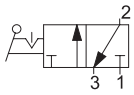	034076	A1MA232LL

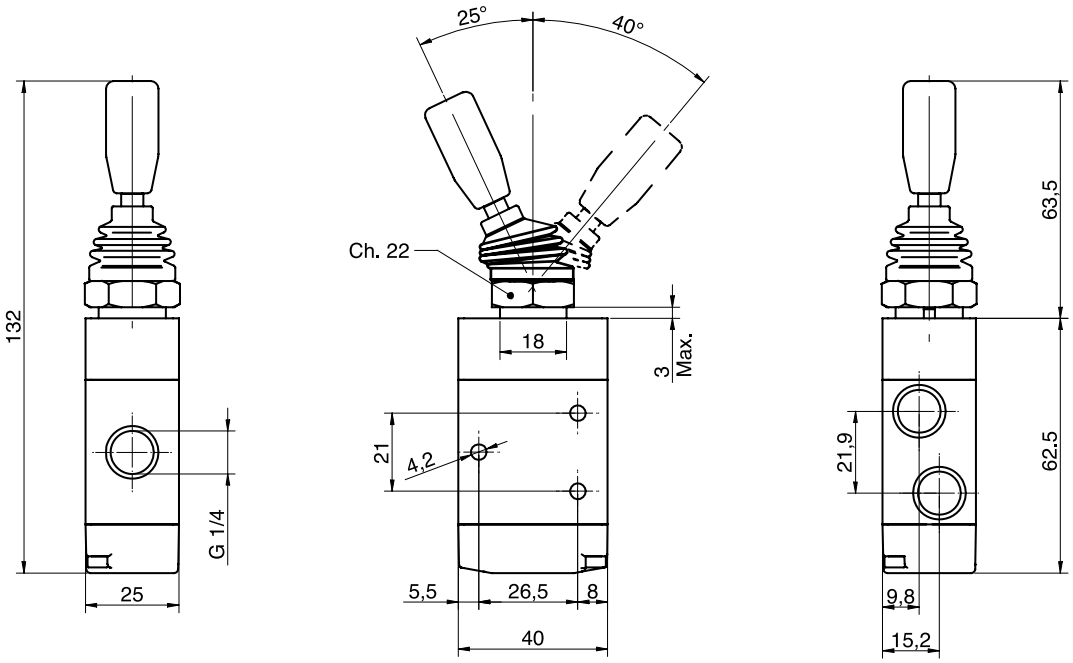

Version	Symbol	Code	Item
3/2 top lever, 2 positions	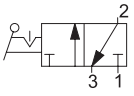	034100	A1MA232LT

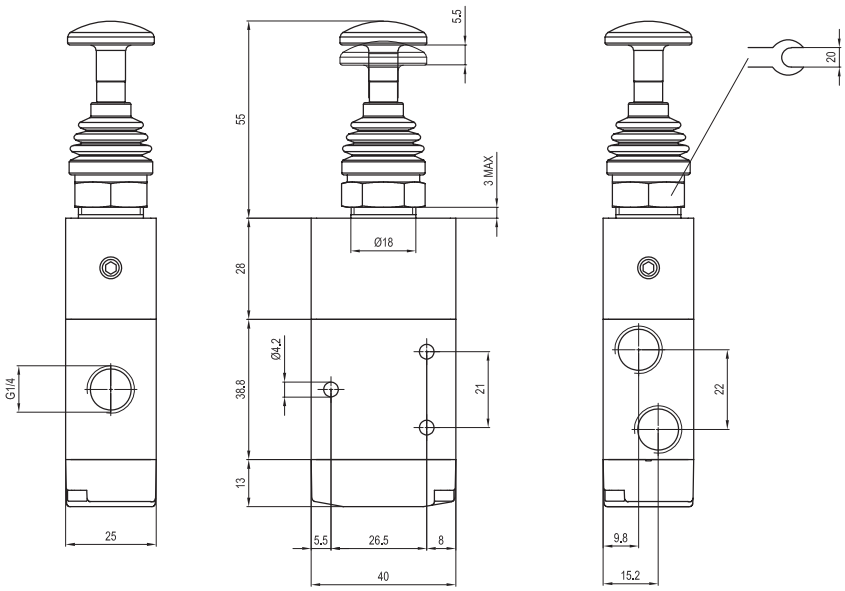

Version	Symbol	Code	Item
3/2 NC push-pull, 1 position	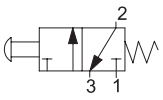	034103	A1MA230TT
3/2 push-pull, 2 positions	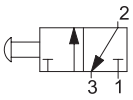	034104	A1MA232TT

Executions			
Version	Symbol	Code	Item
5/2 side lever 1 position	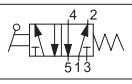	034078	A1MA250LL
5/2 side lever 2 positions	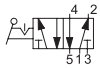	034079	A1MA251LL
5/3 side lever closed centres, 1 position	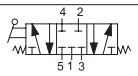	034072	A1MA270LL
5/3 side lever open centres, 1 position	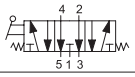	034081	A1MA271LL
5/3 side lever pressurised centres, 1 position	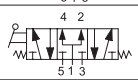	034080	A1MA272LL
5/3 side lever closed centres, 3 positions	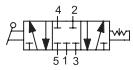	034075	A1MA273LL
5/3 side lever open centres, 3 positions	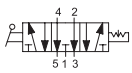	034073	A1MA274LL
5/3 side lever pressurised centres, 3 positions	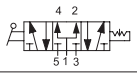	034074	A1MA275LL
5/2 top lever 2 positions	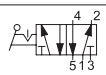	034105	A1MA251LT
5/2 push-pull 1 position	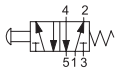	034106	A1MA250TT
5/2 push-pull 2 positions	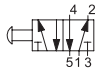	034107	A1MA251TT

On request, they can be supplied according Directive 94/9/EC - **ATEX**
CE Ex **II 2 GDc T5**



Series of spool valves, with static seals, high flow, for panel or sub-base mounting.

Code key

Series	Actuation	Size	Function	Actuation
A1	MA=Manual	1 = 1/8" 2 = 1/4"	30 = 3/2 NC spring return 32 = 3/2 two stable positions 50 = 5/2 spring return 51 = 5/2 two stable positions 70 = 5/3 CC spring return 71 = 5/3 CA spring return 72 = 5/3 CP spring return 73 = 5/3 CC 3 positions 74 = 5/3 CA 3 positions 75 = 5/3 CP 3 positions	LL = side lever LT = top lever TT = push-pull FR = red head push botton FV = green head push botton FN = black head push botton BR = red recessed botton BV = green recessed botton BN = black recessed botton

Technical data	
Fluid	Compressed filtered air with or without lubrication. Lubrication, if be used, must be continous.
Pressure range	0 ÷ 10 bar
Temperature range	-10 °C ÷ + 80°C
Orifice	8 mm
Flow	1100 Nl/min at 6 bar with ΔP 1 bar
Mounting	In any position
Materials	Body: Aluminium Cover: Aluminium Bottom plates: Plastic Spool: Chemical nickel plated aluminium Distancers: Plastic Seals: Nitrile rubber (NBR) Lever: Steel

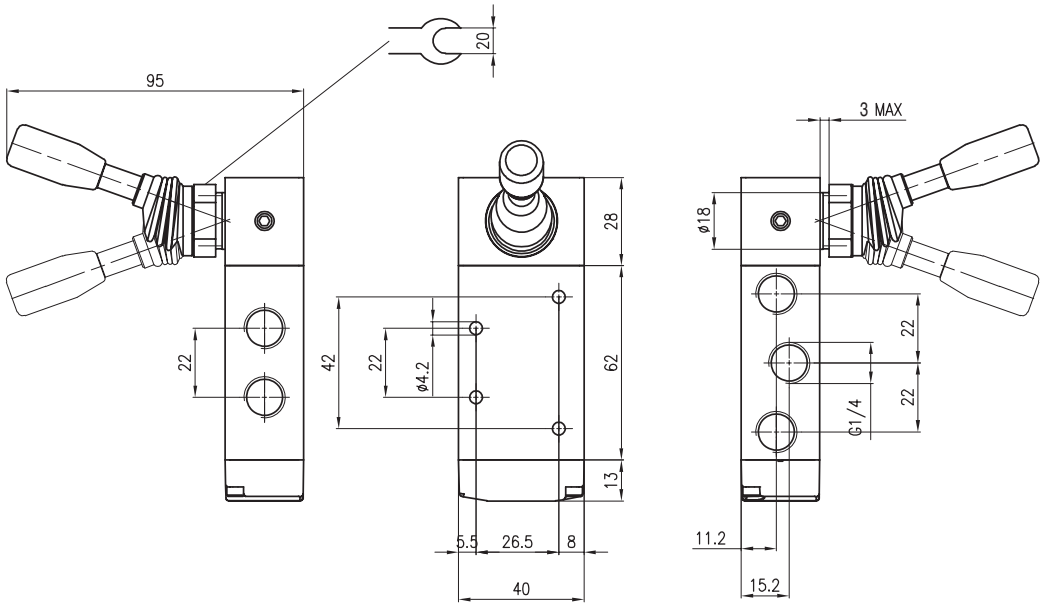

Version	Symbol	Code	Item
5/2 side lever, 1 position	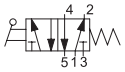	034078	A1MA250LL
5/2 side lever, 2 positions	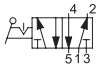	034079	A1MA251LL

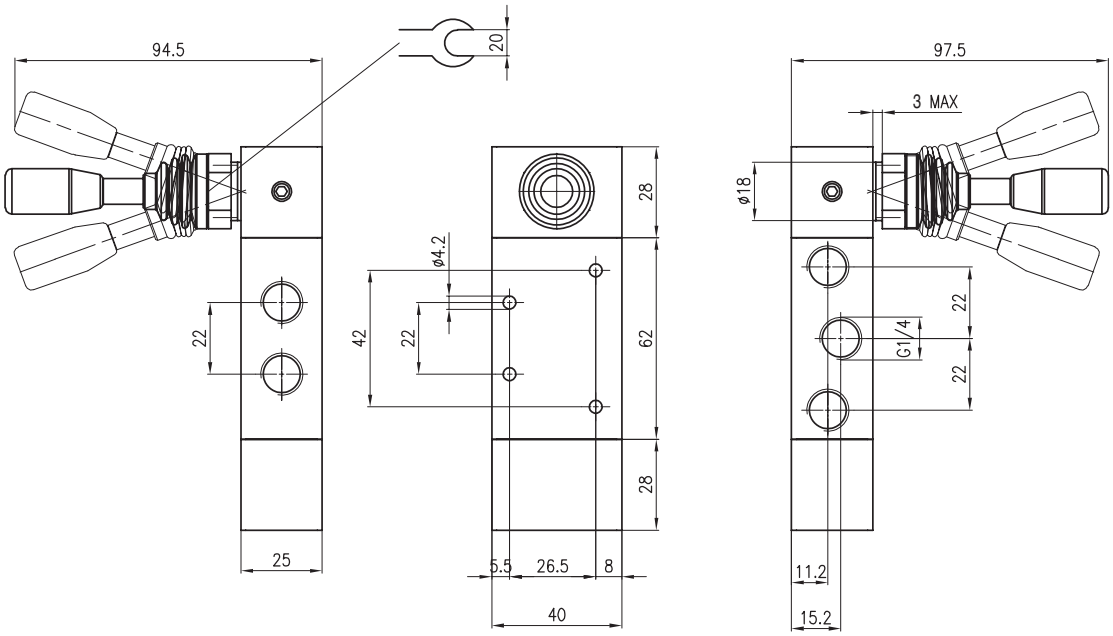

Versione	Simbolo	Codice	Articolo
5/3 side lever, closed centres, 1 position	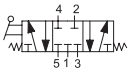	034072	A1MA270LL
5/3 side lever, open centres, 1 position	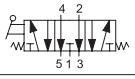	034081	A1MA271LL
5/3 side lever, pressurised centres, 1 position	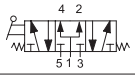	034080	A1MA272LL

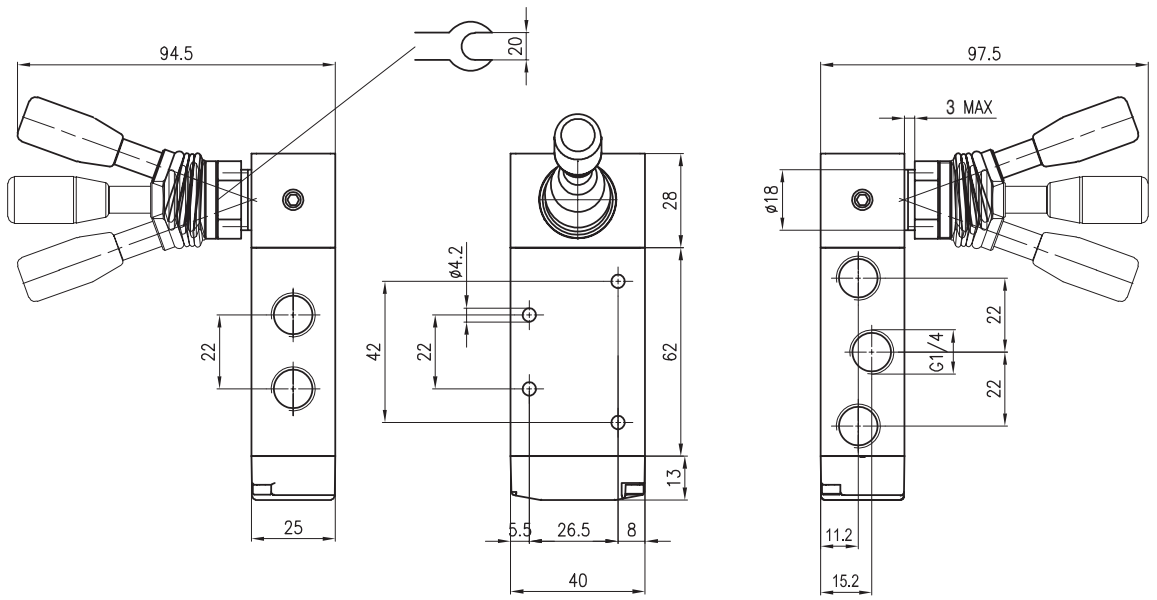

Versione	Simbolo	Codice	Articolo
5/3 side lever, closed centres, 3 positions	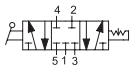	034075	A1MA273LL
5/3 side lever, open centres, 3 positions	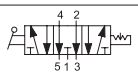	034073	A1MA274LL
5/3 side lever, pressurised centres, 3 positions	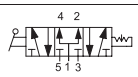	034074	A1MA275LL

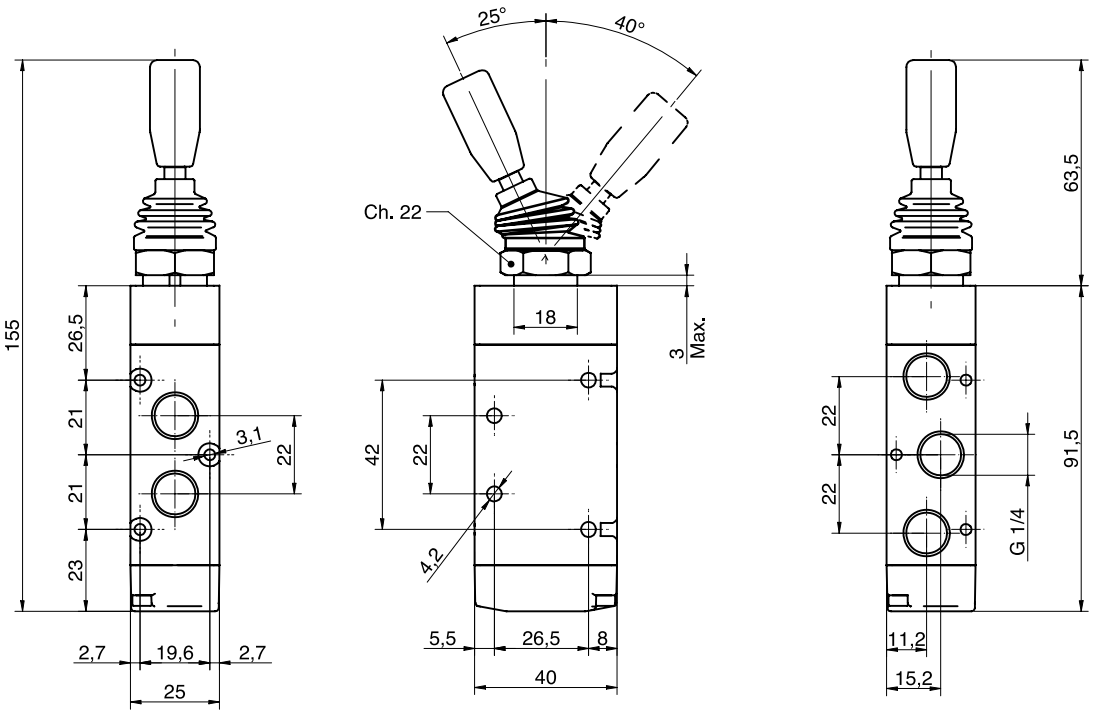

Versione	Simbolo	Codice	Articolo
5/2 top lever, 2 positions	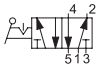	034105	A1MA251LT

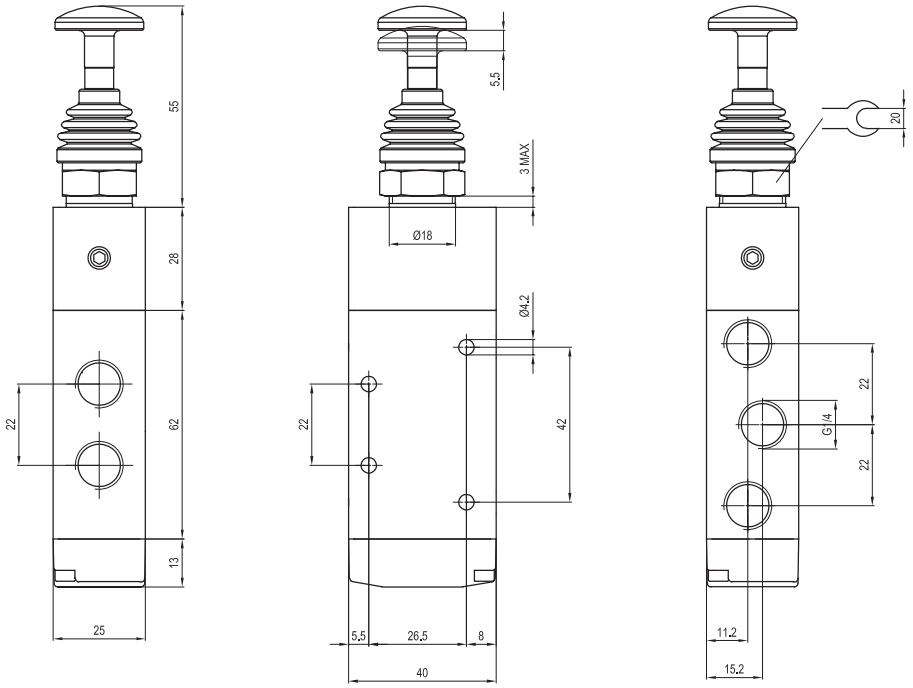

Versione	Simbolo	Codice	Articolo
5/2 push-pull, 1 position	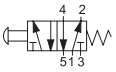	034106	A1MA250TT
5/2 push-pull, 2 positions		034107	A1MA251TT

Foot operated valves ø4, M5 and 1/4”

ø4-M5, 3/2 normally closed and 5/2 foot single stable position

Executions			
Version	Symbol	Code	Item
3/2, normally closed with integral 4 mm push-in fittings	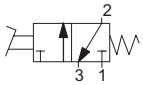	033173	ACP04132C
3/2, normally open with integral 4 mm push-in fittings	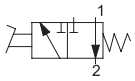	033174	ACP04132A
3/2, normally closed with M5 ports	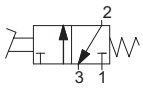	033175	ACP05132C
5/2, 1 position with integral 4 mm push-in fittings	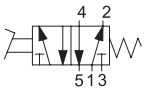	033177	ACP041520
5/2, 1 position with M5 ports	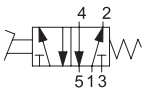	033178	ACP051520
Yellow protection cover		033179	ACP0405P





Series of pedals at low flow and with reduced dimensions, single stable position and with poppet valve.
In the standard version they are without protection; the protection cover type ACP0405P can be applied later on and is supplied separately.
They can be supplied with M5 ports valve or with integral 4 mm push-in fittings.

2

type: **ACP04...**
ACP05...



type: **ACP0405P**

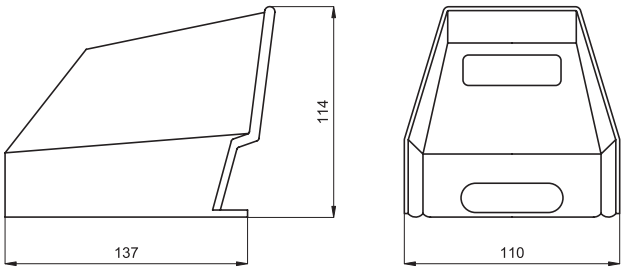

Technical data		
Fluid	Compressed filtered air with or without lubrication. Lubrication, if be used, must be continous.	
Pressure range	2 ÷ 10 bar	
Temperature range	-15 °C ÷ + 60°C	
Orifice	2,5 mm	
Flow	100 Nl/min	
Operating force	24 N	
Materials	Housing:	Black zinc plated steel
	Valve body:	Profiled anodised aluminium
	Valve internal parts:	Nickel plated brass/Stainless steel - Seals: NBR
	Protection cover:	Shock-resistant acetal resin

Foot operated valves ø4, M5 and 1/4”

1/4”, 3/2 and 5/2 foot single and two stable position

Executions			
Version	Symbol	Code	Item
3/2, normally closed, 1 position with safety device	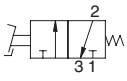	033127	AVP230
3/2 normally closed, 2 positions with safety device	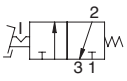	033128	AVP232
5/2, 1 position with safety device	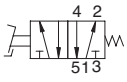	033129	AVP250
5/2, 2 positions with safety device	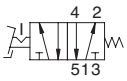	033133	AVP251



Series of pedals with 3/2 or 5/2 valve, single and two stable position.
In the standard version they are provided with 1/4” spool valve and yellow shock-resistant protection in acetal resin and safety device to avoid possible improper actuations.

type: **AVP2...**

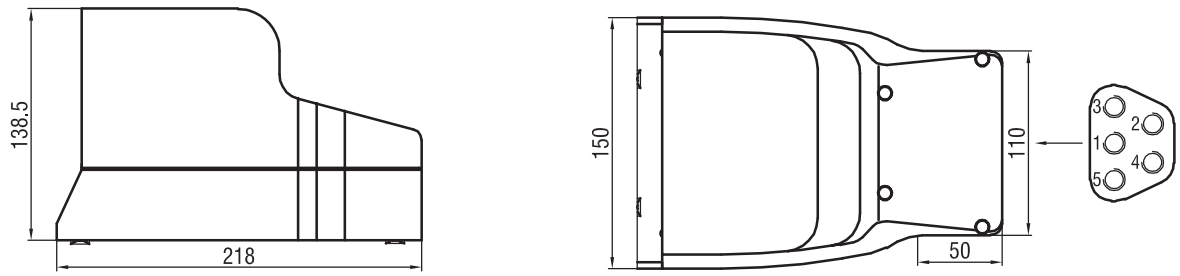

Technical data		
Fluid	Compressed filtered air with or without lubrication. Lubrication, if be used, must be continous.	
Pressure range	2,5 ÷ 10 bar	
Temperature range	0 °C ÷ + 50 °C	
Orifice	8,5 mm	
Flow	1000 Nl/min	
Operating force	50 N	
Materials	Housing:	Shock-resistant acetal resin
	Valve body:	Profiled anodised aluminium
	Valve internal parts:	Nickel plated brass/Nickel plated aluminium/Stain-less steel - Seals: NBR
	Protection cover:	Shock-resistant acetal resin

Executions			
Version	Symbol	Code	Item
Normally open	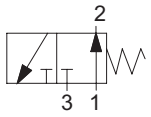	030251	AM04132A
Normally closed	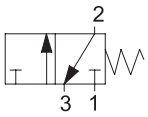	030252	AM04132C
Normally open with side connections	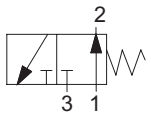	030253	AM04132AL
Normally closed with side connections	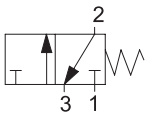	030254	AM04132CL

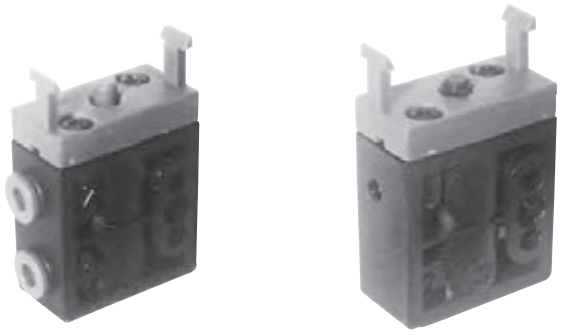

Series of poppet microvalves arranged for operating manually.
Connections with integral 4 mm push-in fittings.
According to the application you can choose between the version with bottom connections or with side ones.
For the choice of the operating device see page 2.265.1.

type: **AM04132A**
AM04132C

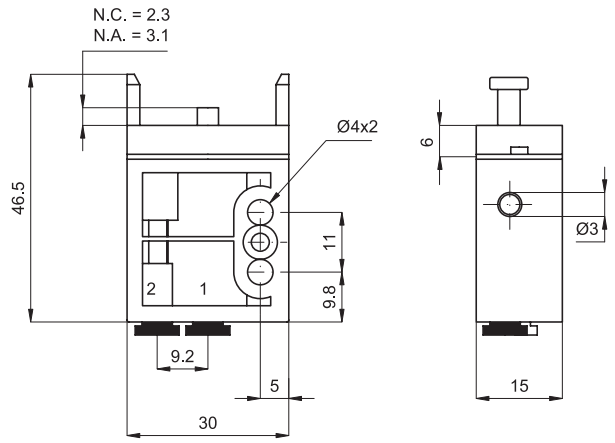

type: **AM04132AL**
AM04132CL

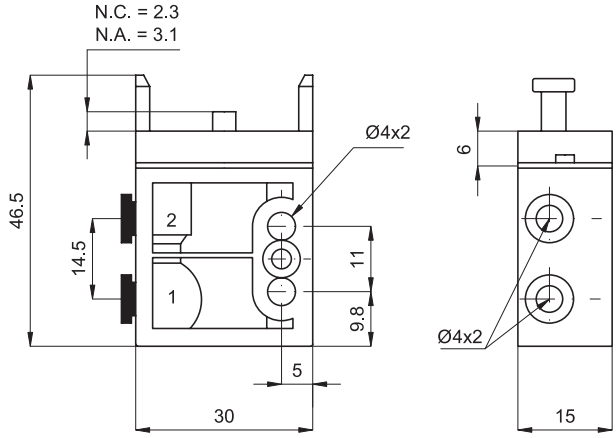

Technical data		
Fluid	Compressed filtered air with or without lubrication. Lubrication, if be used, must be continous.	
Pressure range	0 ÷ 8 bar	
Temperature range	-20 °C ÷ + 80 °C	
Operating force	5 N	
Flow	80 Nl/min.	
Connections	With integral 4 mm push-in fittings	
Fixing	Through 2 holes (ø 4 mm) on the body	
	Through 1 hole (ø 22 mm) on panel (with operating device mounted)	
Mounting	In any position	
Materials	Body:	Acetal resin
	Seals:	Nitrile rubber (NBR)

Microvalves ø 4 and manual operating devices

Microvalves ø 4, 5/2 normally open and normally closed

Executions			
Version	Symbol	Code	Item
5/2, 1 position	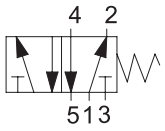	030261	AM041520
5/2, 1 position with side connections		030262	AM041520L





Series of poppet microvalves arranged for operating manually.
Connections with integral 4 mm push-in fittings.
According to the application you can choose between the version with bottom connections or with side ones.
For the choice of the operating device see page 2.265.1.

type: **AM041520**

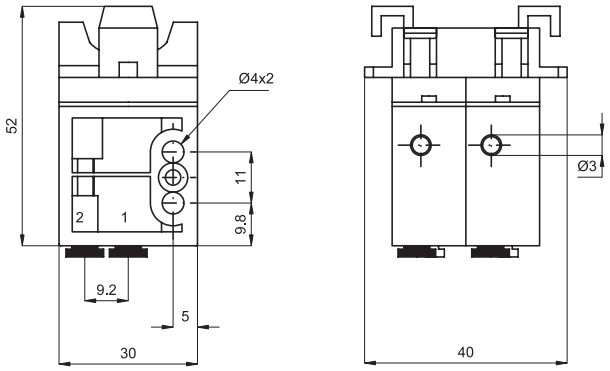

type: **AM041520L**

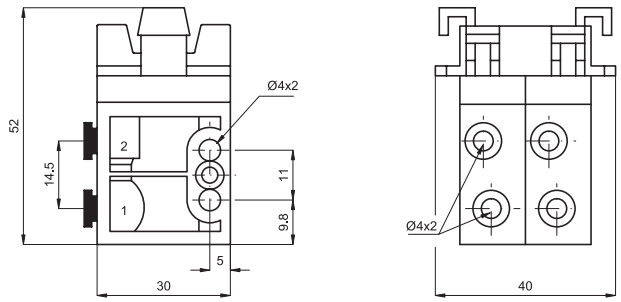

Technical data	
Fluid	Compressed filtered air with or without lubrication. Lubrication, if be used, must be continous.
Pressure range	0 ÷ 8 bar
Temperature range	-20 °C ÷ + 80 °C
Operating force	10 N
Flow	80 Nl/min.
Connections	With integral 4 mm push-in fittings
Fixing	Through 2 holes (ø 4 mm) on the body
	Through 1 hole (ø 22 mm) on panel (with operating device mounted)
Mounting	In any position
Materials	Body: Acetal resin
	Seals: Nitrile rubber (NBR)

Executions			
Version	Symbol	Code	Item
Red recessed button, 1 position	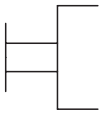	030271	AP11R
Black recessed button, 1 position	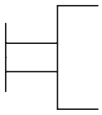	030272	AP11N
Green recessed button, 1 position	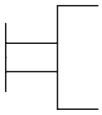	030273	AP11V
Red head push button, 1 position	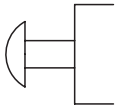	030274	AP21R
Red head push button, 2 positions	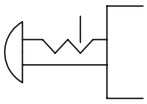	030275	AP22R
Black selector, 2 positions	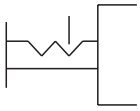	030276	AP32N
Black selector, 3 positions	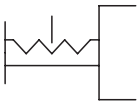	030277	AP33N
Selector with key, 2 positions	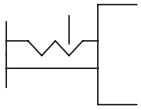	030278	AP42C
Black lever, 3 positions	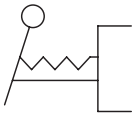	030279	AP53N

The head push button 2 positions type AP22R can only be used with the valves normally open.



Series of operating devices available in different solutions (selector, recessed button, head push button etc.).
Quick mounting on bayonet.
They are arranged for mounting on panel (through 22 mm hole).
For the valves type AM04...

Material:	Acetal resin

type: **AP11**

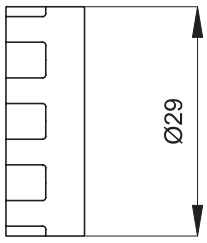

type: **AP21R**

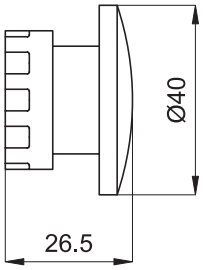

type: **AP22R**

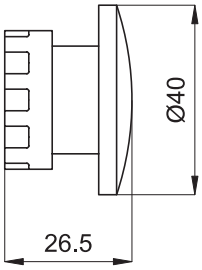

type: **AP32N**
AP33N

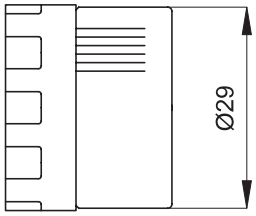

type: **AP42C**

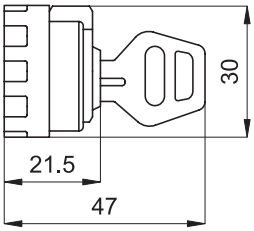

type: **AP53N**

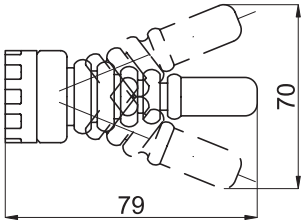

GENERAL INDEX
VALVES INDEX

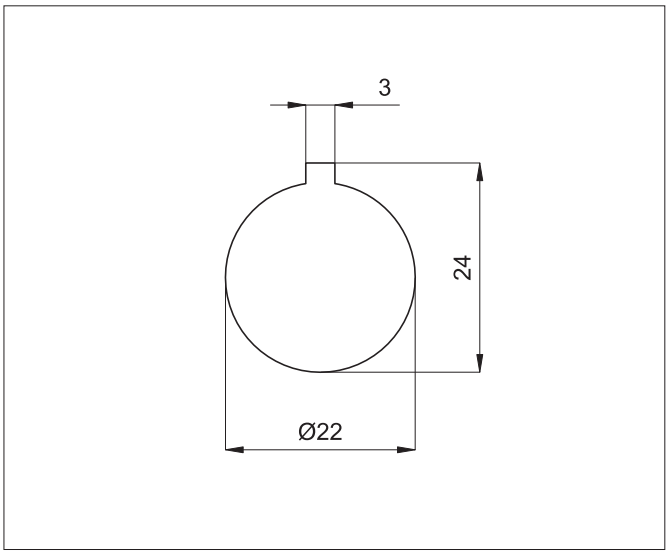

Dimensions of the hole for panel mounting.
The panel must not be thicker than 6 mm.

Maximum overall dimensions

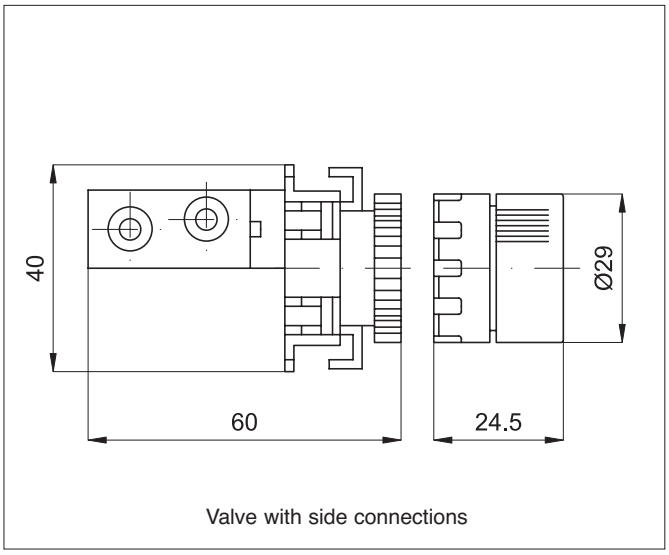

Valve with side connections

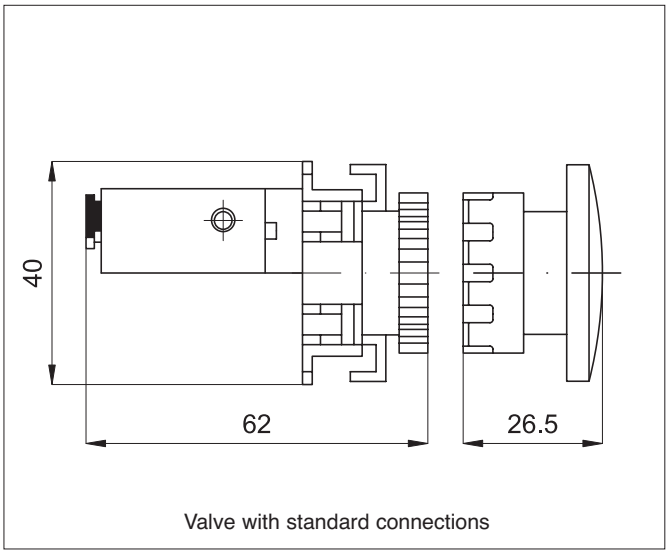

Valve with standard connections

GENERAL INDEX
VALVES INDEX

Executions			
Version	Symbol	Code	Item
3/2, with plunger, N.O.	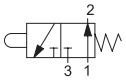	032291	AC104132A
3/2, with plunger, N.C.	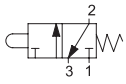	032292	AC104132C
3/2, with plunger, N.O., with side connections	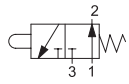	032293	AC104132AL
3/2, with plunger, N.C., with side connections	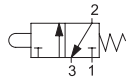	032294	AC104132CL
3/2, with bi-directional lever and roller, N.O.	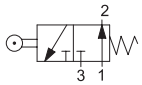	032295	AC204132A
3/2, with bi-directional lever and roller, N.C.	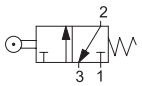	032296	AC204132C
3/2, with bi-directional lever and roller, N.O., with side connections	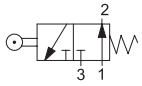	032297	AC204132AL
3/2, with bi-directional lever and roller, N.C., with side connections	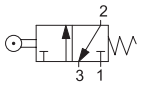	032298	AC204132CL
3/2, with uni-directional lever, N.O.	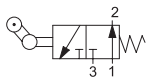	032299	AC304132A
3/2, with uni-directional lever, N.C.	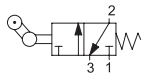	032303	AC304132C
3/2, with uni-directional lever, N.O., with side connections	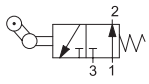	032301	AC304132AL
3/2, with uni-directional lever, N.C., with side connections	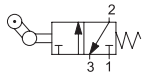	032302	AC304132CL

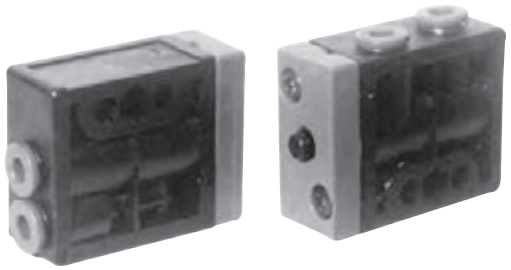

Series of poppet microvalves mechanically operated.
Connections with integral 4 mm push-in fittings.
According to the application you can choose between the version with bottom connections or side ones.

Technical data		
Fluid	Compressed filtered air with or without lubrication. Lubrication, if be used, must be continous.	
Pressure range	0 ÷ 8 bar	
Temperature range	-20 °C ÷ + 80°C	
Operating force	5 N	
Flow	80 Nl/min	
Connections	With integral 4 mm push-in fittings	
Fixing	Through 4 mm holes on the body	
Mounting	In any position	
Materials	Body:	Acetal resin
	Seals:	Nitrile rubber (NBR)

type: **AC104132A**
AC104132C

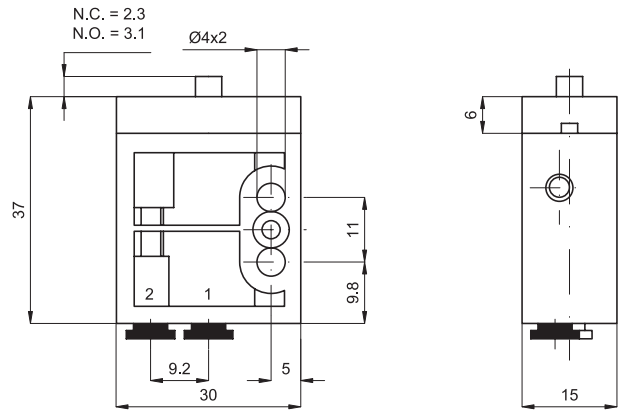

type: **AC104132AL**
AC104132CL

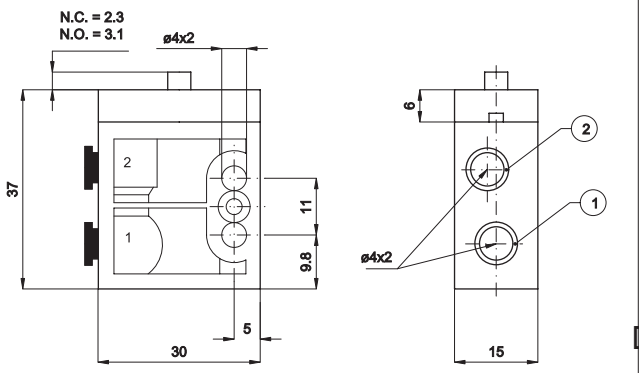

Mechanically operated valves ø 4 and 1/8”

1/8”, 3/2 normally closed and 5/2 single stable position

Executions			
Version	Symbol	Code	Item
3/2, with plunger, N.C.	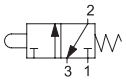	032600	AC118132C
5/2, with plunger, 1 position	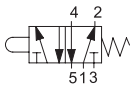	032640	AC1181520
3/2, with bi-directional lever and roller, N.C.	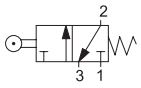	032680	AC218132C
5/2, with bi-directional lever and roller, 1 position	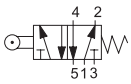	032720	AC2181520
3/2, with uni-directional lever and roller, N.C.	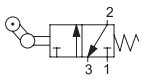	032700	AC318132C
5/2, with uni-directional lever and roller, 1 position	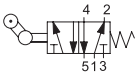	032740	AC3181520



Series of spool valves mechanically operated (plunger, bi-directional and uni-directional lever)

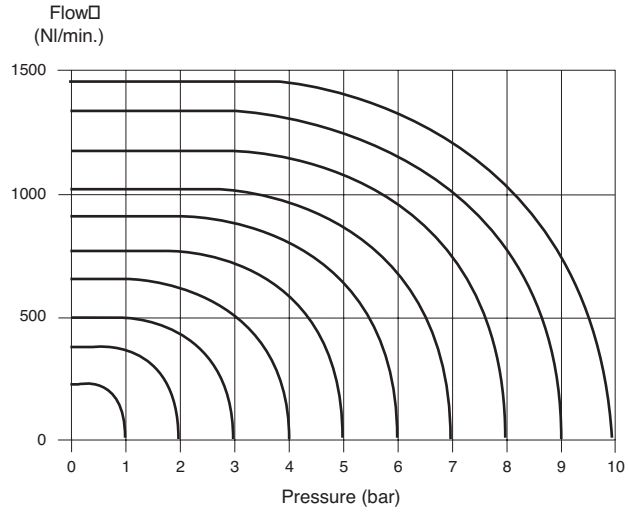

Technical data		
Fluid	Compressed filtered air with or without lubrication. Lubrication, if be used, must be continous.	
Pressure range	1 ÷ 10 bar	
Temperature range	-10 °C ÷ + 60°C	
Orifice	6 mm	
Flow	900 Nl/min	
Connections	1/8”	
Fixing	Through holes on the body	
Mounting	In any position	
Materials	Body:	Painted die-cast aluminium
	Heads:	Plastic
	Seals:	Nitrile rubber (NBR)

Mechanically operated valves ø 4 and 1/8”

1/8”, 3/2 normally closed and 5/2 single stable position

type: **AC118132C**

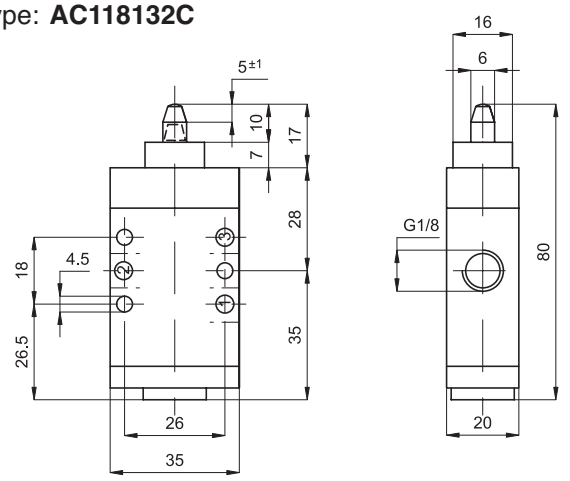

type: **AC1181520**

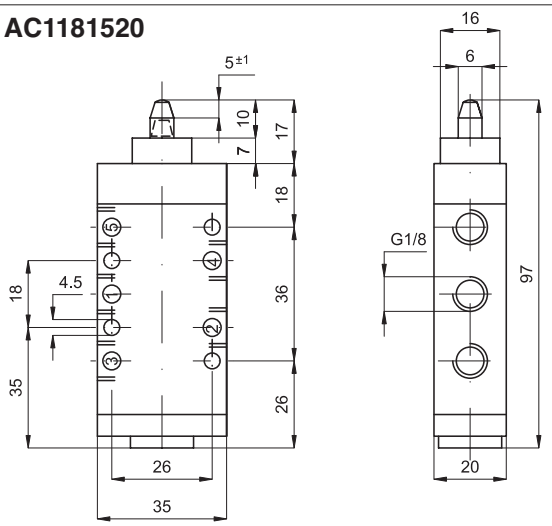

type: **AC218132C**

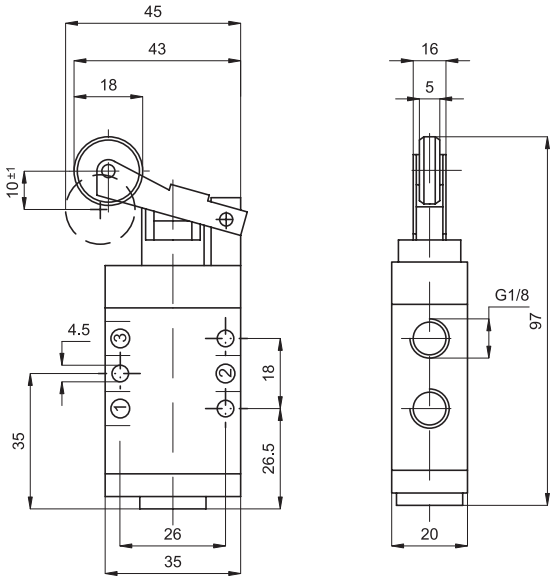

type: **AC2181520**

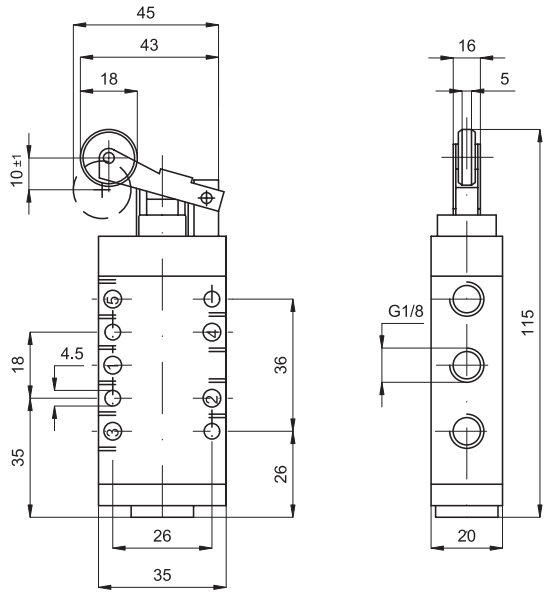

type: **AC318132C**

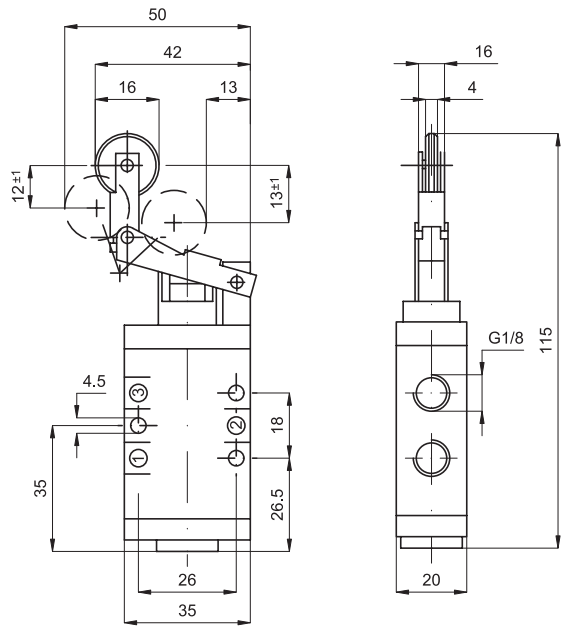

type: **AC3181520**

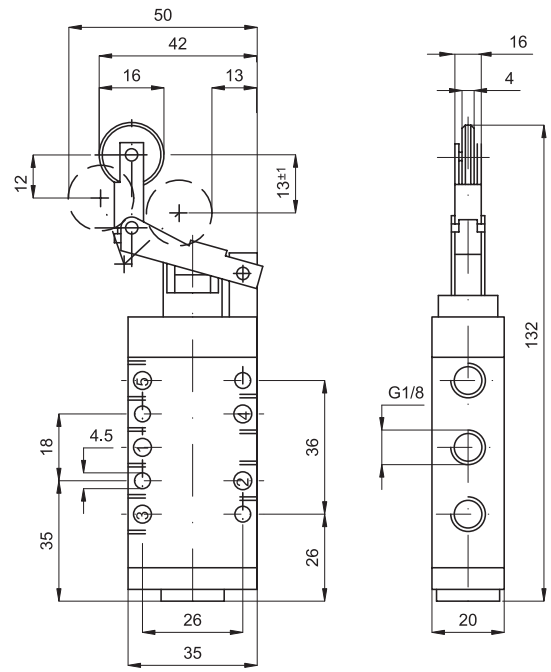

GENERAL INDEX

VALVES INDEX

Executions			
Version	Symbol	Code	Item
M5 blue	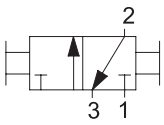	030701	V260005
1/8” blue		030702	V260018
1/4” blue		030703	V260014
3/8” blue		030704	V260038
1/2” blue		030705	V260012



Series of slide valves manually operated.
In line mounting they work to close the supply and at the same time exhaust the downstream circuit air.

How to order: V260018N

V260018	N
Version	Option

Options		Suffix
Black		N
Red		R
Seals FKM	max 150 °C	V
Special versions on request		/ S

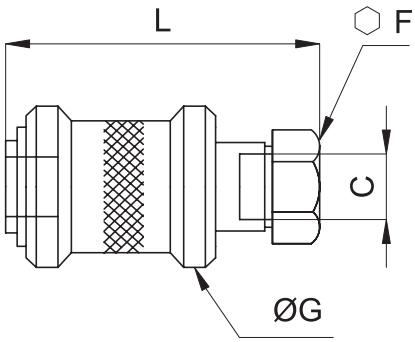

C	F	G	L
M5	9	13	31
1/8”	14	25	48
1/4”	19	30	58
3/8”	22	35	68
1/2”	27	40	80

Technical data					
Fluid	Compressed filtered air with or without lubrication. Lubrication, if be used, must be continous.				
Pressure range	0 ÷ 16 bar				
Temperature range	-10 °C ÷ + 80°C				
Orifice	M5: 2,5 mm	1/8”: 4 mm	1/4”: 7 mm	3/8”: 10 mm	1/2”: 14 mm
Flow	M5: 120 Nl/min	1/8”: 700 Nl/min	1/4”: 1.100 Nl/min	3/8”: 1.500 Nl/min	1/2”: 2.200 Nl/min
Mounting	In line				
Materials	Body: Nickel plated and ground brass Slide: Blue anodised aluminium Seals: Nitrile rubber (NBR)				

Executions			
Version	Symbol	Code	Item
1/8” female - female black lever		030501	1MVSFF
1/4” female - female black lever		030502	2MVSFF
3/8” female - female black lever		030503	3MVSFF
1/2” female - female black lever		030504	4MVSFF
3/4” female - female black lever		030505	5MVSFF
1/8” male-female black lever		030601	1MVSMF
1/4” male-female black lever		030602	2MVSMF
3/8” male-female black lever		030603	3MVSMF
1/2” male-female black lever		030604	4MVSMF
3/4” male-female black lever		030605	5MVSMF

Options	Suffix
Red lever	R
Special versions on request	/ S



Series of miniature ball valves from brass hexagonal bar and manually operated.
In line mounting they work to close or open the flow in both directions.

How to order: 1MVSFFR

1MVSFF	R
Version	Option

type: **FF**

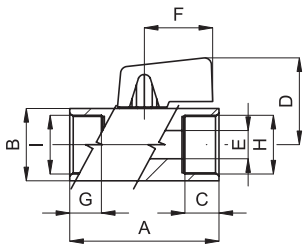

type: **MF**

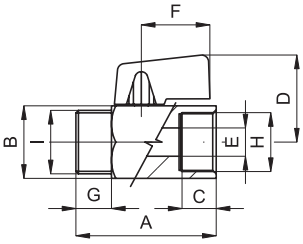

H	G	C	A	B	D	E	F
1/8”	9	9	39	21	27	6	22
1/4”	9	9	39	21	27	8	22
3/8”	10	9	41	21	27	8	22
1/2”	10,5	10,5	45	25	29	10	22
3/4”	13,5	13,5	51	30	31,5	12	22

Technical data			
Fluid	Compressed filtered air with or without lubrication		
Pressure range	0 ÷ 10 bar		
Temperature range	-10 °C ÷ + 90°C		
Orifice	See the dimension E in the table		
Mounting	In-line		
Materials	Body:	Nickel plated brass	
	Lever:	Nylon 66, reinforced glass	Ball: Nickel plated brass
	Seals:	PTFE - NBR	

Executions			
Version	Symbol	Code	Item
1/8” female - female		030641	11MSFF
1/4” female - female		030642	22MSFF
1/8” male - female		030643	11MSMF
1/4” male 1/8” female		030644	21MSMF
1/4” male - female		030645	22MSMF
3/8” male 1/4” female		030646	32MSMF



Series of miniature ball valves with cast body, manually operated and with reduced dimensions.
In line mounting they work to close or open the flow in both directions.

type: **FF** type: **MF**

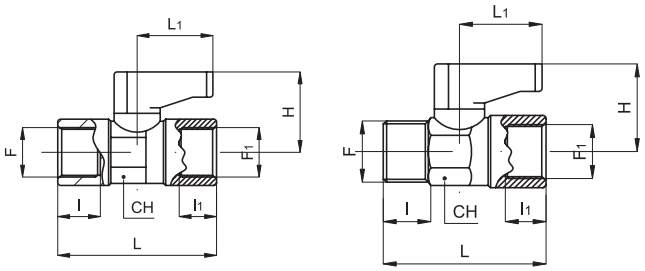

F	F1	DN	I	I1	L	L1	H	CH
1/8”	1/8”	5,5	8	8	36,5	19	21	14
1/4”	1/4”	5,5	11	11	43	19	21	14
1/8”	1/8”	5,5	8	8	35,5	19	21	14
1/4”	1/8”	5,5	11	8	38,5	19	21	14
1/4”	1/4”	5,5	11	11	40,5	19	21	14
3/8”	1,4”	5,5	11,5	11	41	19	21	14

Technical data			
Fluid	Compressed filtered air with or without lubrication		
Pressure range	0 ÷ 10 bar		
Temperature range	-10 °C ÷ + 90°C		
Orifice	Vedi tabella quota DN		
Mounting	In-line		
Materials	Body:	Nickel plated brass	
	Lever:	Nylon 66, reinforced glass	Ball: Nickel plated brass
	Seals:	PTFE - NBR	

Executions			
Version	Symbol	Code	Item
1/4”		030661	VSLO014FF
3/8”		030662	VSLO038FF
1/2”		030663	VSLO012FF
3/4”		030664	VSLO034FF
1”		030665	VSLO100FF
1 1/4”		030666	VSLO114FF
1 1/2”		030667	VSLO112FF
2”		030668	VSLO200FF



Series of brass ball valves full bore with long lever and manually operated.
In line mounting they work to close or open the air flow in both directions.

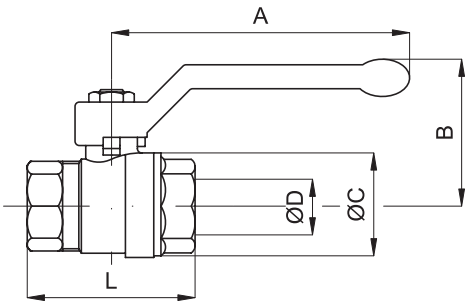

Ports	ø D	A	B	ø C	L	Weight (g)
1/4”	10	85	42	23	37	100
3/8”	10	85	42	24	42	120
1/2”	15	85	46	30	50	160
3/4”	20	105	53	38	58	285
1”	25	105	57	46	69	450
1 1/4”	32	130	70	58	81	820
1 1/2”	40	130	76	70	93	1280
2”	50	165	92	86	110	2050

Technical data				
Fluid	Compressed air, inert gases, non-aggressive fluids			
Pressure range	1/4” - 3/8”= 40 bar	1/2”-3/4”= 32 bar	1”= 25 bar	1 1/4”-1 1/2”= 20 bar	2”= 16 bar
Temperature range	-15 °C ÷ + 100°C			
Orifice	See the dimension ø D in the table			
Flow	1/4” - 3/8”= 3.000 l/min	1/2”= 11.500 l/min	3/4”= 21.000 l/min	1”= 33.000 l/min
	1 1/4”= 50.000 l/min	1 1/2”= 84.000 l/min	2”= 97.000 l/min.	
Mounting	In-line			
Materials	Body:	Nickel plated brass		
	Lever:	Aluminium covered with aluminium	Ball: Nickel plated brass	
	Seals:	PTFE - NBR		

GENERAL INDEX VALVES INDEX

Executions			
Version	Symbol	Code	Item
M5	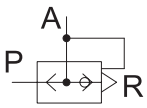	030806	7VSR
1/8”		030801	1VSR
1/4”		030802	2VSR
3/8”		030803	3VSR
1/2”		030804	4VSR
3/4”		030805	5VSR
3/4” maxi		030807	5VSRM
1” maxi		030808	6VSRM

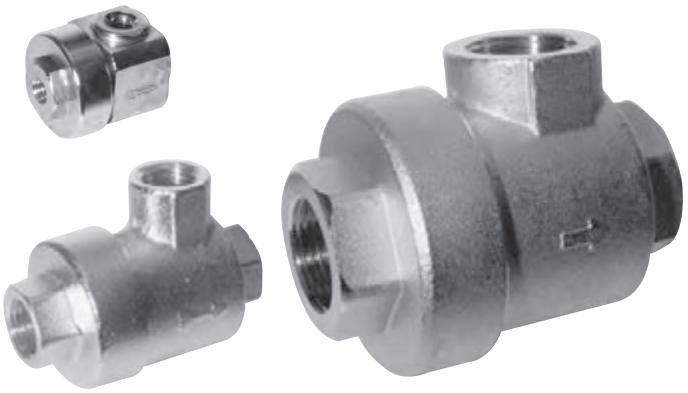

Series of quick exhaust valves used to increase the speed of a cylinder.
The valve must be mounted directly on the port of the cylinder to achieve the maximum possible speed.
When the supply is in P the diaphragm closes the exhaust R and so the air flows through A into the chamber of the cylinder. When the supply in P fails the diaphragm closes P and this is due to the exhaust air from A to R. The noise of the exhaust can be reduced by a silencer.
For silencers see from page 4.0

How to order: 2VSRV

2VSR	V
Version	Option

Options		Suffix
Seals FKM	max 150 °C	V
Threaded NPTF		NPT

Technical data						
Fluid	Compressed filtered air with or without lubrication					
Pressure range	1 ÷ 10 bar					
Temperature range	-20 °C ÷ + 70°C					
Orifice (mm)	1/8” = 6	1/4” = 8,5	3/4” = 8,5	1/2” = 15	3/4” = 18	1” = 24
Flow from P to A						
Flow from A to R						
Mounting	Preferably directly on the port of the cylinder					
Materials	Body: Nickel plated brass Seals: Diaphragm: Polyurethane - Washer: NBR					

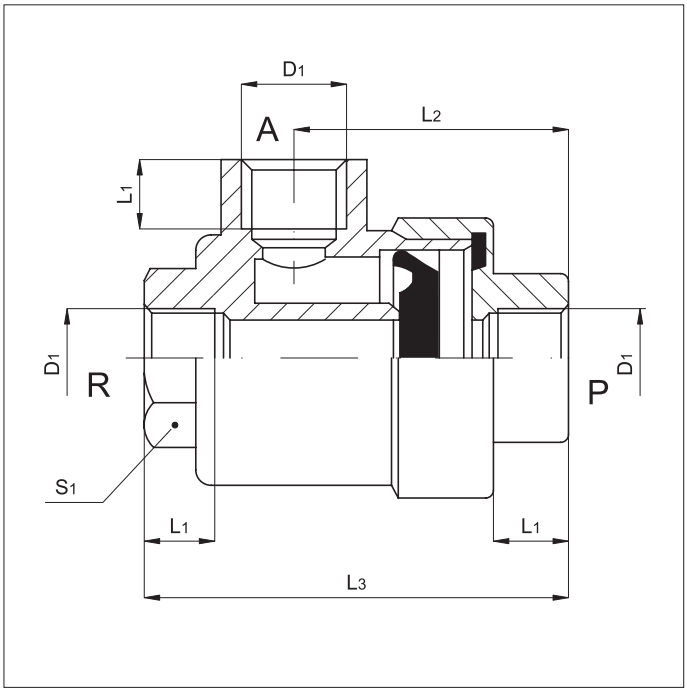

D1	L1	L2	L3	S1
1/8”	7,5	27	42	15
1/4”	11	35	54	19
3/8”	11	35	54	19
1/2”	14	45	72	26
3/4”	16,3	53	87	32
M5	5	17,5	25	10
3/4” MAXI	18	70	108	46
1” MAXI	18	70	108	46

Seal kit

Valve code	Polyurethane seal code	FKM seal code	Washer code	Polyurethane seals kit code	FKM seals kit code
030806	030906	-	030913	-	-
030801	030901	030909	038018	038061	038062
030802 / 030803	030902	030903	038019	038063	038064
030804	030904	030910	038020	038065	038066
030805	030905	030908	038021	038067	038068
030807 / 030808	030907	030911	038026	038069	038070

Executions			
Version	Symbol	Code	Item
M5		030101	7FF
1/8”		030102	1FF
1/4”		030103	2FF
3/8”		030104	3FF
1/2”		030105	4FF
3/4”		030107	5FF

Varianti		Sigla
Guarnizioni FKM	max 150 °C	V
Versioni speciali a richiesta		/ S

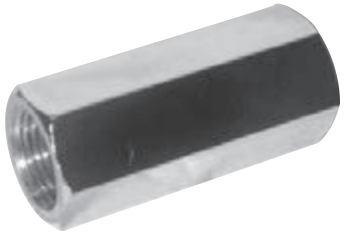

Series of uni-directional valves from brass hexagonal bar, female threaded.
In line mounting they allow the compressed air to flow in one direction only; therefore, they are useful in those applications where no return of the compressed air to the supply is admitted.

How to order: 2FFV

2FF	V
Version	Option

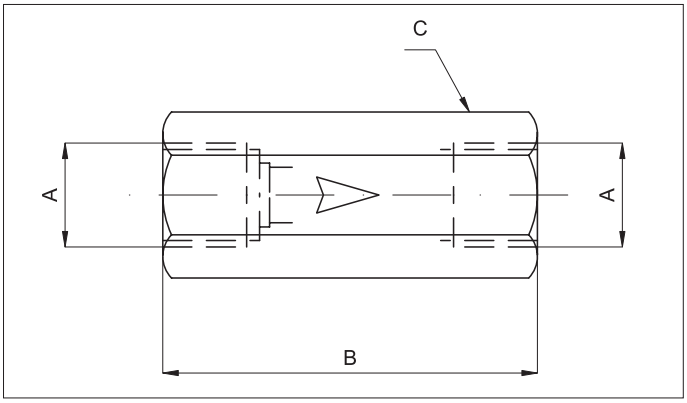

A	B	C
M5	25	8
1/8”	34	13
1/4”	39	16
3/8”	50	21
1/2”	60	25
3/4”	42	30

Technical data					
Fluid	Compressed filtered air with or without lubrication				
Pressure range	2 ÷ 10 bar				
Temperature range	-10 °C ÷ + 60°C				
Orifice	M5= 2,2 mm	1/8”= 5,2 mm	1/4”= 7 mm	3/8”= 10 mm	1/2”= 12 mm
Flow	M5= 100 Nl/min	1/8”= 500 Nl/min	1/4”= 900 Nl/min	3/8”= 2.600 Nl/min	1/2”= 3.500 Nl/min.
Mounting	In-line				
Materials	Body: Nickel plated brass (3/4” not plated brass) Internal parts: Brass - Spring: Stainless steel Seals: Nitrile rubber (NBR) - 3/8” and 1/2” VITON				

Executions			
Version	Symbol	Code	Item
1/8”		030951	1VS
1/4”		030952	2VS
3/8”		030953	3VS
1/2”		030954	4VS
3/4”		030955	5VS
1”		030956	6VS



Series of adjustable safety valves, range from 3 to 7 bar.
For mounting on reservoirs or in those applications where the existing pressure must not exceed the fixed value.

Options	Suffix
Fixed calibration with certificate according D.E. 97/23/CE and on request ISPESL *	CC..
Special versions on request **	/ S

* The overall dimensions of the certified valve are different from the standard ones; they must be asked for. The certified valve is available with fixed calibration only (after the option suffix specify the required calibration in bar).
** Available on quantity only.

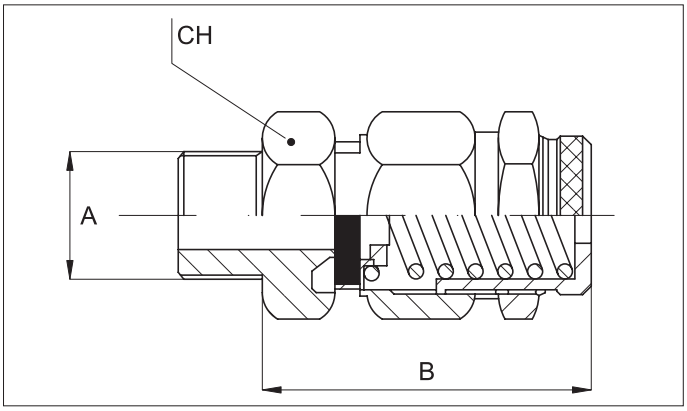

A	B	CH
1/8”	34	15
1/4”	34	15
3/8”	53	20
1/2”	53	22
3/4”	70	30
1”	70	30

Technical data				
Fluid	Compressed filtered air with or without lubrication. Lubrication, if be used, must be continous.			
Pressure range	3 ÷ 7 bar			
Temperature range	-10 °C ÷ + 90°C			
Orifice	1/8” - 1/4”= 6 mm	3/8”= 10 mm	1/2”= 11 mm	3/4” - 1”= 18 mm
Flow	1/8” - 1/4”= 1.600 l/min	3/8”= 3.400 l/min	1/2”= 3.700 l/min	1”= 7.900 l/min
Materials	Body, seat, adjustment screw, lock nut:		Brass	
	Spring:		Steel C 98	
	Seal:		Nitrile rubber (NBR)	

GENERAL INDEX VALVES INDEX

Executions			
Version	Symbol	Code	Item
ø 50 mm, 12 springs, F03 connection	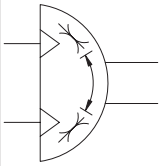	810103	AR50SE
ø 63 mm, 12 springs, F05 connection		810107	AR63SE
ø 75 mm, 12 springs, F05 connection		810109	AR75SE
ø 85 mm, 12 springs, F07 connection		810111	AR85SE
ø 100 mm, 12 springs, F07 connection		810113	AR100SE
ø 115 mm, 12 springs, F10 connection		810115	AR115SE
ø 125 mm, 12 springs, F10 connection		810117	AR125SE

Options	Suffix
6 springs	06
8 springs	08
10 springs	10
ISO connection instead of the standard one (for the possible executions see the table at page 2.430.2)	F..



Series of rotary actuators single acting with double rack.
They can be applied to ball or butterfly valves to automate their operation.
The coupling actuator/valve can be direct thanks to the holes made on the bottom of the actuator itself according to ISO 5211 - DIN 3337 standards or through specific adapters.
The upper side of the actuator is made according to VDI/VDE 3845 NAMUR standards and allows to set up accessories such as CAM and position sensors.
The side connections are threaded and arranged for NAMUR valves.
For actuator with valve see from page 2.431.1.
For adapters and brackets see page 2.431.30.
For CAM and position sensors see page 2.431.30
For NAMUR solenoid valves see page 2.88.1.

How to order: AR50SE06F04

AR50SE	06	F04
Version	Option	Option

Technical data		
Fluid	Compressed filtered air with or without lubrication. Lubrication, if be used, must be continous.	
Pressure range	See forces table at page 2.430.2.	
Temperature range	-20 °C ÷ + 70°C	
Materials	Body:	Hardened and anodised aluminium ASTM6063T6
	Piston and rack:	Aluminium ASTM B179 - DIN 1725/5
	Pinion:	Nickel plated steel ASTM A 105
	Heads:	Aluminium ASTM B179 - DIN 1725/5
	Screws and springs:	Stainless steel
	Seals:	Nitrile rubber (NBR) - Nylon 46

Rotary actuators with ball valve

Rotary actuators *Single acting*

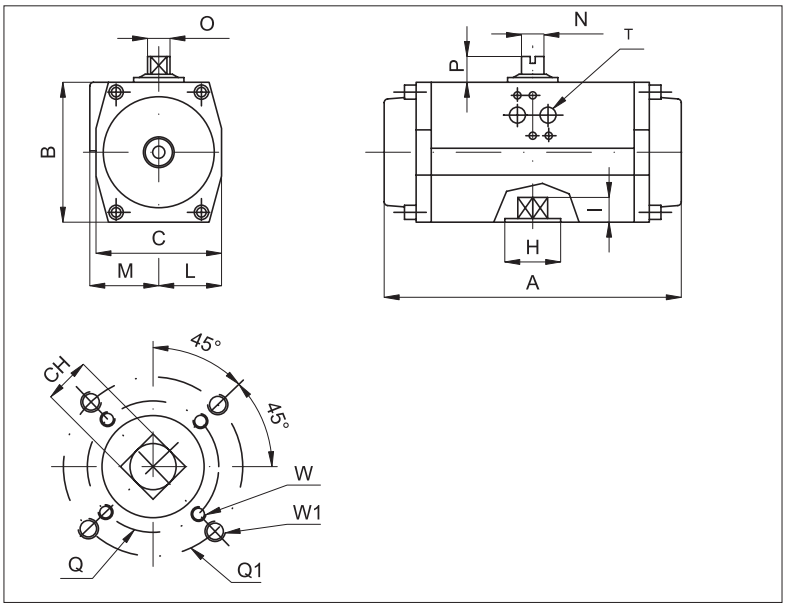

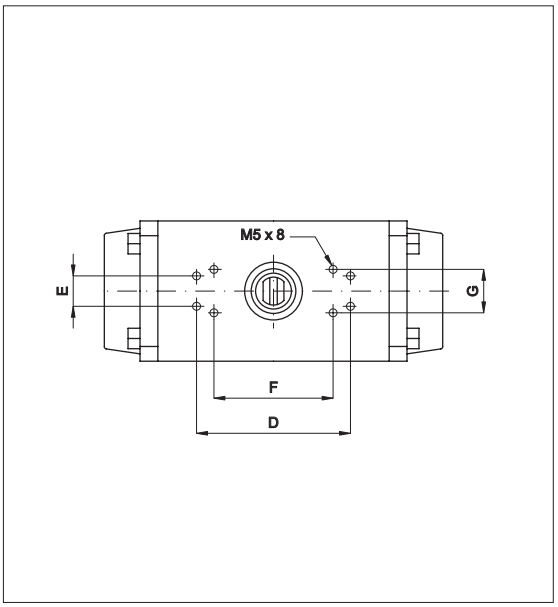

Ø mm.	A	B	C	F	G	H	L	M	N	O	P	Q	Q_1	W	W_1	T	Standard connection		Alternative connection	
																	Flange	CH	Flange	CH
50	138	67	58	80	30	30	29	37	8	12	20	42	-	M5	-	1/8”	F03	9	F04	11
63	152	83	73	80	30	35	36,5	44	8	12	20	50	-	M6	-	1/4”	F05	14	F04	11
75	202	100	85	80	30	35	42,5	49	14	18	20	50	70	M6	M8	1/4”	F05	14	F07	17
85	230	110	98	80	30	55	49	53	14	18	20	50	70	M6	M8	1/4”	F07	17	F05	14
100	271	125	110	80	30	55	55	63	14	18	20	70	102	M8	M10	1/4”	F07	17	F10	22
115	308	142	128	130	30	70	64	69	27	36	30	70	102	M8	M10	1/4”	F10	22	F07	17
125	360	155	140	130	30	70	70	73	27	36	30	70	102	M8	M10	1/4”	F10	22	F07	17

Maximum forces (Nm)

Bore mm	Number of springs	Forces generated by air according to pressure, number of springs and position (minimum and maximum, 0° and 90°)												Spring forces	
		Pressure (bar)													
		3		4		5		6		7		8			
		0°	90°	0°	90°	0°	90°	0°	90°	0°	90°	0°	90°	90°	0°
50	3 + 3	5,2	3,9	8,2	6,8	11,2	9,8	14,1	12,7	17,1	15,7	20,0	18,7	5,0	3,6
	4 + 4			7,0	5,2	10,0	8,1	12,9	11,1	15,9	14,0	18,8	17,0	6,0	4,8
	5 + 5					8,7	6,5	11,7	9,4	14,7	12,4	17,6	15,3	8,3	6,0
	6 + 6							10,5	7,8	13,4	10,7	16,4	13,7	10	7,2
63	3 + 3	9,8	6,7	15,1	12,00	20,4	17,3	25,7	22,5	30,9	27,8	36,2	33,1	9,1	6,0
	4 + 4			13,1	9,0	18,4	14,2	23,7	19,5	28,9	24,8	34,2	30,1	12,1	8,0
	5 + 5					16,4	11,2	21,7	16,5	26,9	21,8	32,2	27,0	15,2	10
	6 + 6							19,7	13,4	25	18,7	30,2	24	18,2	12
75	3 + 3	21,4	13,6	32,7	24,8	43,9	36,1	55,1	47,3	66,3	58,5	77,5	69,7	20	12,2
	4 + 4			28,6	18,2	39,8	29,4	51,0	40,6	62,2	51,8	73,5	63,0	26,7	16,3
	5 + 5					35,7	22,7	47,0	33,9	58,2	45,1	69,4	56,4	33,4	20,3
	6 + 6							42,9	27,3	54,1	38,5	65,3	49,7	40,1	24,4
85	3 + 3	33,2	20	50,3	37,0	67,4	54,1	84,4	71,2	101,5	88,3	118,6	105,3	31,3	18
	4 + 4			44,3	26,6	61,4	43,7	78,4	60,8	95,5	77,8	112,6	94,9	41,7	24
	5 + 5					55,4	33,3	72,4	50,3	89,5	67,4	106,6	84,5	52,1	30
	6 + 6							66,4	40	83,5	57	100	4	62,5	36
100	3 + 3	50,6	32,5	77,2	50,09	103,8	85,7	130	112	157	139	184	165	47,3	29,1
	4 + 4			67,5	43,34	94,1	69,9	121	97	147	123	174	150	63	38,9
	5 + 5					84,4	54,2	111	81	138	107	164	134	78,8	48,6
	6 + 6							101	65	128	91,6	154	118	94,5	58,3
115	3 + 3	80,7	51,5	125	95,43	169	139	213	183	257	227	300	271	80,4	51,2
	4 + 4			107	68,6	152	113	196	157	239	200	283	244	107	68,2
	5 + 5					134	85,6	178	130	222	174	266	218	134	85,3
	6 + 6							161	103	205	147	249	191	161	102
125	3 + 3	110	70,1	168	128	226	186	284	243	341	301	399	359	103	62,7
	4 + 4			147	93,5	205	151	263	209	320	267	378	324	137	83,5
	5 + 5					184	117	242	175	300	232	357	290	172	104
	6 + 6							220	140	278	198	336	256	206	125

The forces indicated above are those available to open the valve after the spring compression.
The values of the spring forces are actual when the air is exhausted.
The position 0° referred to air is the 90° referred to the spring (actuator not under pressure); on the contrary, the position 90° referred to air is the 0° referred to the spring (actuator under pressure).

GENERAL INDEX VALVES INDEX

Executions			
Version	Symbol	Code	Item
ø 32 mm, F03 connection	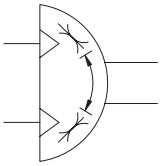	810101	AR32DE
ø 50 mm, F03 connection		810102	AR50DE
ø 63 mm, F05 connection		810106	AR63DE
ø 75 mm, F05 connection		810108	AR75DE
ø 85 mm, F07 connection		810110	AR85DE
ø 100 mm, F07 connection		810112	AR100DE
ø 115 mm, F10 connection		810114	AR115DE
ø 125 mm, F10 connection		810116	AR125DE

Options	Suffix
ISO connection instead of the standard one (for the possible executions see the table at page 2.430.11)	F..



Series of rotary actuators double acting with double rack.
They can be applied to ball or butterfly valves to automate their operation.
The coupling actuator/valve can be direct thanks to the holes made on the bottom of the actuator itself according to ISO 5211 - DIN 3337 standards or through specific adapters.
The upper side of the actuator is made according to VDI/VDE 3845 NAMUR standards and allows to set up accessories such as CAM and position sensors.
The side connections are threaded and arranged for NAMUR valves.
For actuator with valve see from page 2.431.1.
For adapters and brackets see page 2.431.30.
For CAM and position sensors see page 2.431.30
For NAMUR solenoid valves see page 2.88.1.

How to order: AR50DEF04

AR50DE	F04
Version	Option

Technical data		
Fluid	Compressed filtered air with or without lubrication. Lubrication, if be used, must be continous.	
Pressure range	See forces table at page 2.430.11.	
Temperature range	-20 °C ÷ + 70°C	
Materials	Body:	Hardened and anodised aluminium ASTM6063T6
	Piston and rack:	Aluminium ASTM B179 - DIN 1725/5
	Pinion:	Nickel plated steel ASTM A 105
	Heads:	Aluminium ASTM B179 - DIN 1725/5
	Screws and springs:	Stainless steel
	Seals:	Nitrile rubber (NBR) - Nylon 46

Rotary actuators with ball valve

Rotary actuators *Double acting*

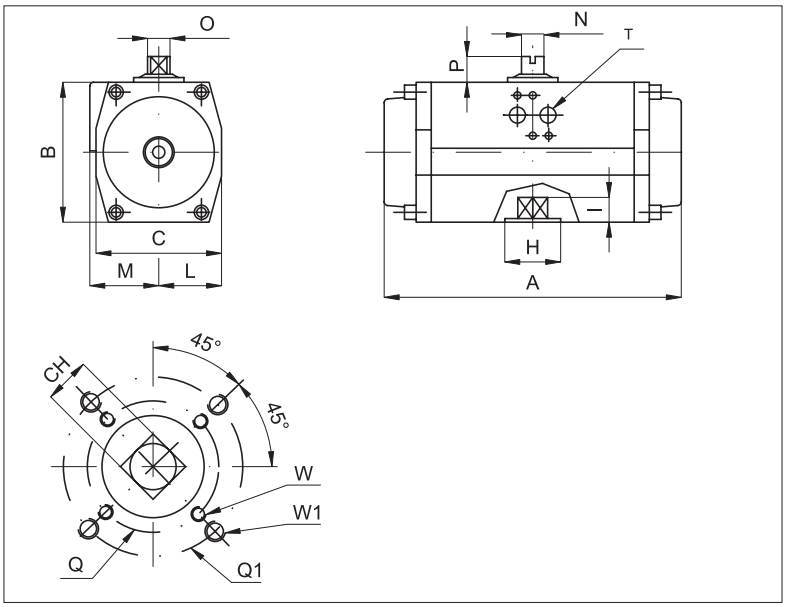

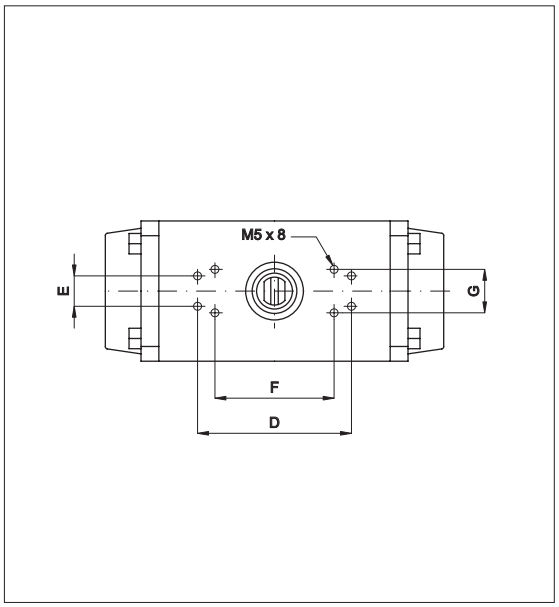

Ø mm.	A	B	C	F	G	H	L	M	N	O	P	Q	Q_1	W	W_1	T	Standard connection		Alternative connection	
																	Flange	CH	Flange	CH
32	115	45	45	50	25	-	22,5	22,5	8	12	20	36	-	M5	-	1/8”	F03	9	-	-
50	138	67	58	80	30	30	29	37	8	12	20	42	-	M5	-	1/8”	F03	9	F04	11
63	152	83	73	80	30	35	36,5	44	8	12	20	50	-	M6	-	1/4”	F05	14	F04	11
75	202	100	85	80	30	35	42,5	49	14	18	20	50	70	M6	M8	1/4”	F05	14	F07	17
85	230	110	98	80	30	55	49	53	14	18	20	50	70	M6	M8	1/4”	F07	17	F05	14
100	271	125	110	80	30	55	55	63	14	18	20	70	102	M8	M10	1/4”	F07	17	F10	22
115	308	142	128	130	30	70	64	69	27	36	30	70	102	M8	M10	1/4”	F10	22	F07	17
125	360	155	140	130	30	70	70	73	27	36	30	70	102	M8	M10	1/4”	F10	22	F07	17

Maximum forces (Nm)

Forces generated by the air according to pressure and bore

Bore mm	Pressure (bar)								
	2	3	4	5	6	7	8	9	10
32	2,4	3,6	4,8	6,1	7,3	8,5	9,7	10,9	12,1
50	5,9	8,9	11,8	14,8	17,7	20,7	23,6	26,6	29,5
63	10,6	15,8	21,1	26,4	31,7	36,9	42,2	47,5	52,8
75	22,4	33,7	44,9	56,1	67,3	78,5	89,7	101	112
85	34,2	51,2	68,3	85,4	102	119	136	153	170
100	53,2	79,8	106	133	159	186	212	239	265
115	88	132	176	220	264	308	352	396	440
125	115	173	231	288	346	404	462	519	577

Executions			
Version	Symbol	Code	Item
1/2”		811011	VSO2012SE
3/4”		811012	VSO2034SE
1”		811013	VSO2100SE
1 1/4”		811014	VSO2114SE
1 1/2”		811015	VSO2112SE
2”		811016	VSO2200SE



Series of brass ball valves “full bore” with rotary actuator single acting.
For actuator features see page 2.430.1.
For NAMUR solenoid valve see page 2.88.1.
For actuator mounting accessories see page 2.431.30.

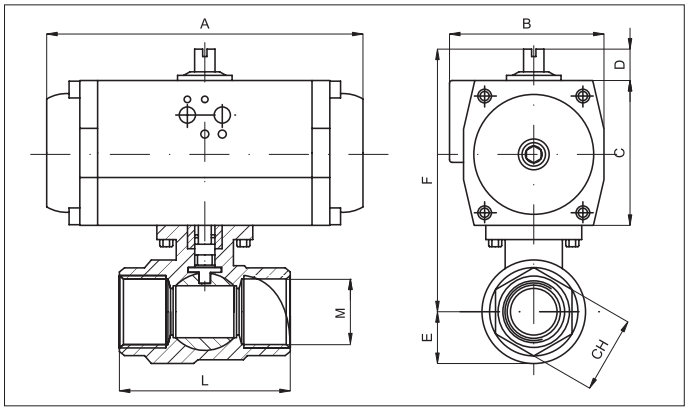

A	B	C	D	F	CH es	L	M
138	66	67	20	127,5	26	75	1/2”
138	66	67	20	127,5	32	80	3/4”
138	66	67	20	131	41	90	1”
138	66	67	20	142	50	110	1 1/4”
138	66	67	20	148,5	55	120	1 1/2”
152	80,5	83	20	176	70	140	2”

Technical data of the ball valve						
Fluid	Compressed air, water, inert gases and non-aggressive fluids					
Pressure range	from 1/2” to 1 1/4”= 40 bar		from 1 1/2” to 2”= 25 bar			
Temperature range	-20 °C ÷ + 150°C					
Orifice	1/2”= 15 mm	3/4”= 20 mm	1”= 25 mm	1 1/4”= 32 mm	1 1/2”= 40 mm	2”= 50 mm
Flow	1/2”= 11.500 l/min	3/4”= 21.000 l/min	1”= 33.000 l/min	1 1/4”= 50.000 l/min	1 1/2”= 84.000l/min	2”= 97.000 l/min
Mounting	In-line					
Materials	Body: Nickel plated brass Ball: Chrome plated brass Seals: PTFE - NBR					

Rotary actuators with ball valve

Brass ball valves with actuator double acting

Executions			
Version	Symbol	Code	Item
1/2”		811001	VSO2012DE
3/4”		811002	VSO2034DE
1”		811003	VSO2100DE
1 1/4”		811004	VSO2114DE
1 1/2”		811005	VSO2112DE
2”		811006	VSO2200DE



Series of brass ball valves “full bore” with rotary actuator double acting.
For actuator features see page 2.430.10.
For NAMUR solenoid valve see page 2.88,1.
For actuator mounting accessories see page 2.431.30.

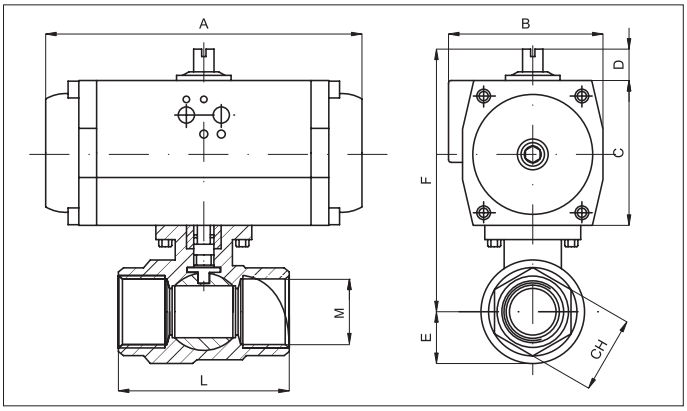

A	B	C	D	F	CH es	L	M
115	45	45	20	104	26	75	1/2”
138	66	67	20	127,5	32	80	3/4”
138	66	67	20	131	41	90	1”
138	66	67	20	142	50	110	1 1/4”
138	66	67	20	148,5	55	120	1 1/2”
152	80,5	83	20	176	70	140	2”

Technical data of the ball valve						
Fluid	Compressed air, water, inert gases and non-aggressive fluids					
Pressure range	from 1/2” to 1 1/4”= 40 bar		from 1 1/2” to 2”= 25 bar			
Temperature range	-20 °C ÷ + 150°C					
Orifice	1/2”= 15 mm	3/4”= 20 mm	1”= 25 mm	1 1/4”= 32 mm	1 1/2”= 40 mm	2”= 50 mm
Flow	1/2”= 11.500 l/min	3/4”= 21.000 l/min	1”= 33.000 l/min	1 1/4”= 50.000 l/min	1 1/2”= 84.000l/min	2”= 97.000 l/min
Mounting	In-line					
Materials	Body: Nickel plated brass Ball: Chrome plated brass Seals: PTFE - NBR					

Executions			
Version	Symbol	Code	Item
3/8”		811031	VSI2038SE
1/2”		811032	VSI2012SE
3/4”		811033	VSI2034SE
1”		811034	VSI2100SE
1 1/4”		811035	VSI2114SE
1 1/2”		811036	VSI2112SE
2”		811037	VSI2200SE

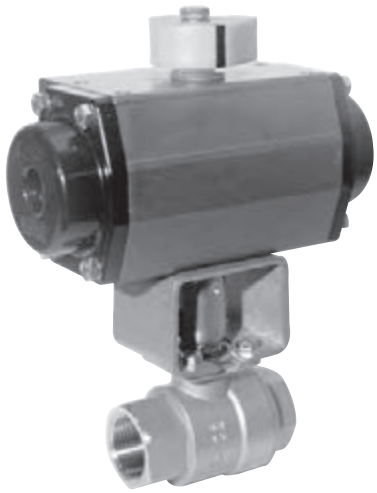

Series of stainless steel ball valves “full bore” with rotary actuator single acting.
For actuator features see page 2.430.1.
For NAMUR solenoid valve see page 2.88.1.
For actuator mounting accessories see page 2.431.30.

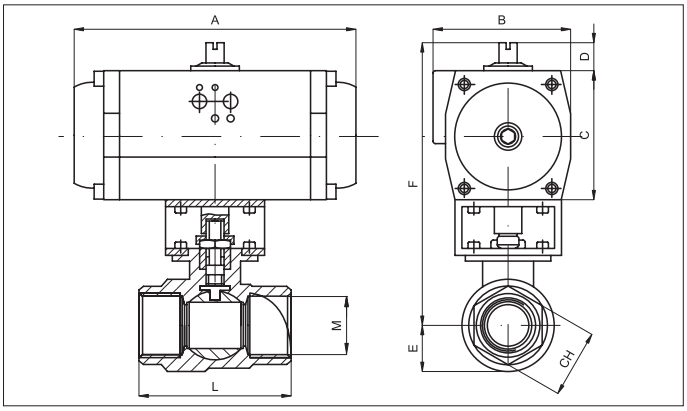

A	B	C	D	E	F	CH es	CH off	L	M
138	66	67	20	14,5	148,5	21,5	-	50	3,8”
152	80,5	83	20	17	179,5	26,5	-	60	1/2”
152	80,5	83	20	21,5	185,5	31,5	-	70	3/4”
152	80,5	83	20	25,5	189,5	40,5	-	85	1”
202	91,5	100	20	31,5	215	-	49,5	95	1 1/4”
230	102	110	20	38	231	-	54,5	105	1 1/4”
271	118	125	20	46	253	-	69,5	125	2”

Technical data of the ball valve							
Fluid	Compressed air, water, inert gases, fluids, steam						
Pressure range	from 3/8” to 1/2”= 160 bar	from 3/4” to 1”= 100 bar	from 1 1/4” to 1 1/2”= 64 bar	2”= 40 bar			
Temperature range	-20 °C ÷ + 150°C						
Orifice	3/8”= 10 mm	1/2”= 15 mm	3/4”= 20 mm	1”= 25 mm	1 1/4”= 32 mm	1 1/2”= 40 mm	2”= 50 mm
Flow	3/8”= 3.000 l/min	1/2”= 11.500 l/min	3/4”= 21.000 l/min	1”= 33.000 l/min			
	1 1/4”= 50.000 l/min	1 1/2”= 84.000 l/min	2”= 97.000 l/min.				
Mounting	In-line						
Materials	Body: Stainless steel AISI 316						
	Ball: Stainless steel AISI 316						
	Seals: PTFE - FKM						

Rotary actuators with ball valve

Stainless steel ball valves with actuator double acting

Executions			
Version	Symbol	Code	Item
3/8”		811021	VSI2038DE
1/2”		811022	VSI2012DE
3/4”		811023	VSI2034DE
1”		811024	VSI2100DE
1 1/4”		811025	VSI2114DE
1 1/2”		811026	VSI2112DE
2”		811027	VSI2200DE

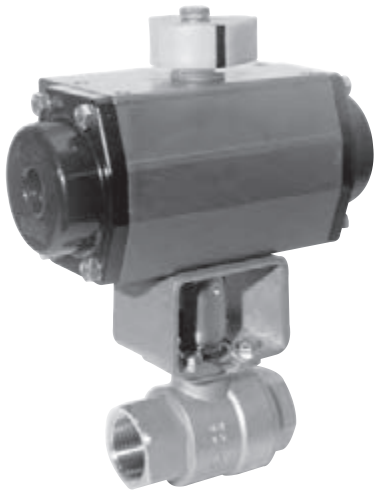

Series of stainless steel ball valves “full bore” with rotary actuator double acting.
For actuator features see page 2.430.10.
For NAMUR solenoid valve see page 2.88.1.
For actuator mounting accessories see page 2.431.30.

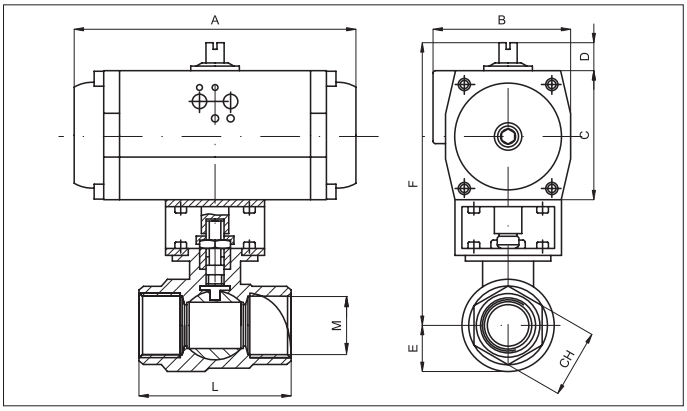

A	B	C	D	E	F	CH es	CH off	L	M
115	45	45	20	14,5	126,5	21,5	-	50	3/8”
138	66	67	20	17	153,5	26,5	-	60	1/2”
138	66	67	20	21,5	159,5	31,5	-	70	3/4”
138	66	67	20	25,5	163,5	40,5	-	85	1”
152	80,5	83	20	31,5	198	-	49,5	95	1 1/4”
202	91,5	100	20	38	221	-	54,5	105	1 1/2”
202	91,5	100	20	46	228	-	69,5	125	2”

Technical data of the ball valve							
Fluid	Compressed air, water, inert gases, fluids, steam						
Pressure range	from 3/8” to 1/2”= 160 bar	from 3/4” to 1”= 100 bar	from 1 1/4” to 1 1/2”= 64 bar	2”= 40 bar			
Temperature range	-20 °C ÷ + 150°C						
Orifice	3/8”= 10 mm	1/2”= 15 mm	3/4”= 20 mm	1”= 25 mm	1 1/4”= 32 mm	1 1/2”= 40 mm	2”= 50 mm
Flow	3/8”= 3.000 l/min	1/2”= 11.500 l/min	3/4”= 21.000 l/min	1”= 33.000 l/min			
	1 1/4”= 50.000 l/min	1 1/2”= 84.000 l/min	2”= 97.000 l/min.				
Mounting	In-line						
Materials	Body: Stainless steel AISI 316						
	Ball: Stainless steel AISI 316						
	Seals: PTFE - FKM						

Standard executions		
Version	Symbol	Type
Reduction for seat key plan		R
Coupling flange actuator/valve according to ISO 5211 standards		F
Coupling adapter actuator/valve		AD
Standard CAM		CS
CAM with metal inserts for position sensor		CP
Position sensor kit		KSP

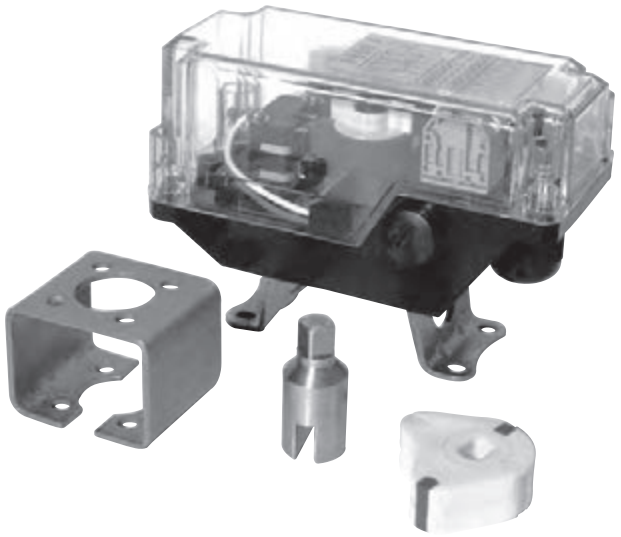

Accessories for rotary actuators: adapters, brackets and position sensor.

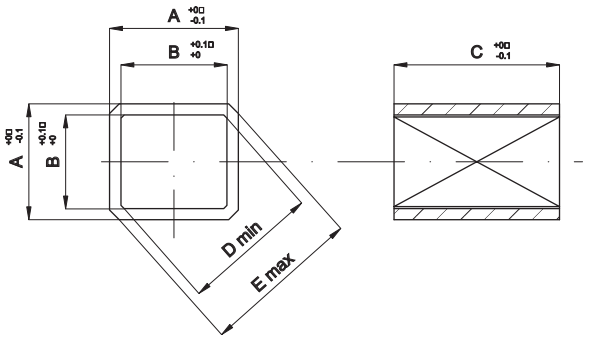

Reduction for seat key plan

Code	Item	A	B	C	D	E
811101	R11/9	11	9	11	12,3	14,3
811102	R14/11	14	11	16	14,3	18
811103	R17/11	17	11	17	14,3	22
811104	R17/14	17	14	17	18,3	22
811105	R22/17	22	17	22	22,5	28
811106	R27/22	27	22	27	28,5	36

Material: Sintered stainless steel AISI 316

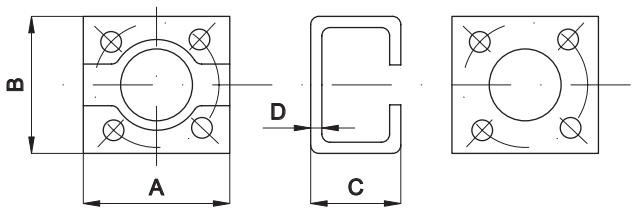

Coupling flange actuator/valve according to ISO 5211 standards

Code	Item	A	B	C	D
811110	F03/F03	45	52	40	2,5
811111	F04/F03	45	52	40	2,5
811112	F05/F03	55	62	50	2,5
811113	F04/F04	45	52	40	2,5
811114	F05/F04	55	62	50	2,5
811115	F07/F04	70	82	50	2,5
811116	F05/F05	55	62	50	2,5
811117	F07/F05	70	82	50	2,5
811118	F07/F07	70	82	50	2,5
811119	F10/F07	100	115	70	3
811120	F10/F10	100	115	70	3
811121	F12/F07	120	133	70	3
811122	F12/F10	120	133	70	3
811123	F12/F12	120	133	70	3
811124	F14/F10	137	153	70	4
811125	F14/F12	137	153	70	4
811126	F14/F14	137	153	70	4
811127	F16/F12	160	175	70	4
811128	F14/F16	160	175	70	4
811129	F16/F16	160	175	70	4

Material: Stainless steel AISI 316

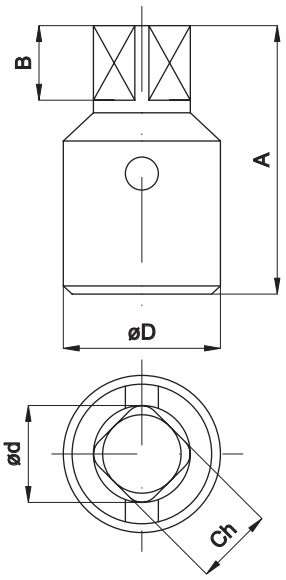

Coupling adapter actuator/valve

Code	Item	Ch	A	B	ø D	ø d
811140	AD0950	9	50	10	20	11,5
811141	AD1152	11	52	12	20	14
811142	AD1466	14	66	16	24	17,5
811143	AD1770	17	70	19	28	21,5
811144	AD2295	22	95	24	35	27,5
811145	AD27100	27	100	29	42	34
811146	AD36120	36	120	38	55	46
811147	AD46155	46	155	48	70	58

Material: Stainless steel AISI 316

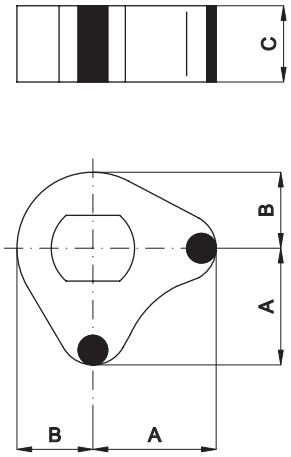

Standard CAM in acetal resin

Code	Item	A	B	C
811160	CS32/50/63	26	17	15
811163	CS75/85/100	26	17	15
811166	CS115/125	46	30	20

Standard CAM in acetal resin with metal inserts for position sensor

Code	Item	A	B	C
811180	CP32/50/63	26	17	15
811183	CP75/85/100	26	17	15
811186	CP115/125	46	30	20

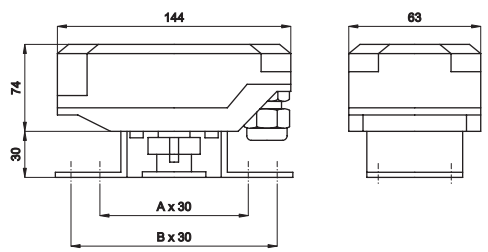

Position sensor kit

Code	Item	Type of contact
811221	KSP1A	Micro-switch (d. 50, 63, 75, 85, 100)
811222	KSP2	Proximity sensor
811223	KSP1B	Micro-switch (d. 115,125)

Material: Acetal resin - Transparent cover

Technical data

from page 3.1.1

Size 1/4”



from page 3.2.1

Size 3/8”

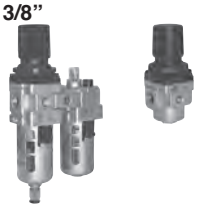

from page 3.2.10

Size 1/2”



from page 3.2.20

Size 1”



from page 3.2.30

Accessories, assembling kits and spare parts



from page 3.5.1

Microregulators 1/8”, 1/4”



from page 3.10.1

Pressure-gauges



from page 3.50.1

TREATMENT OF THE COMPRESSED AIR

The air destined for use in pneumatic devices must be suitably prepared.

It is taken from the surrounding environment for introduction into the compressor and is rich in impurities and water vapour.

The compressor itself inevitably releases lubricating oil into the air, which is very dangerous for the seals of the pneumatic components.

Following passage through the compressor, the compressed air is always stored in a large tank that has a dual function: to even out oscillations in pressure and to cool the compressed air.

Indeed, the high temperatures reached at the end of the compression process aid the evaporation of the water in the air against the condensing effect of the high pressures.

For these reasons, the tank located downstream of the compressor must be of a suitable size: in particular, in the case in which the compressor is volumetric and a high quantity of air is taken up.

It is very important that the compressed air has time to cool, allowing the water vapour contained in it to condense on the bottom of the tank, as it is considerably more convenient to eliminate as much of the water vapour as possible during this stage.

Even with these precautions, the percentage of humidity present in the compressed air remains important. Indeed, during distribution along the pipes, further condensation occurs, due to the further cooling of the air and despite the falls in pressure that aid the dissolution of the water.

For this reason the distribution pipes must be slightly inclined (~2%) and feature umbrella-handle pipes at regular intervals that lead to small condensation collection tanks.

Particular attention must be paid to the lubricating oil, especially in the case of centrifugal compressors: it must be eliminated by means of appropriate oil extraction filters at the exit of the compressor.

The humidity of the air causes rust and corrosion in the metal pipes, deposits in the pneumatic devices and the formation of sleeves of ice at the discharge points in particular atmospheric conditions and for high-frequency use.

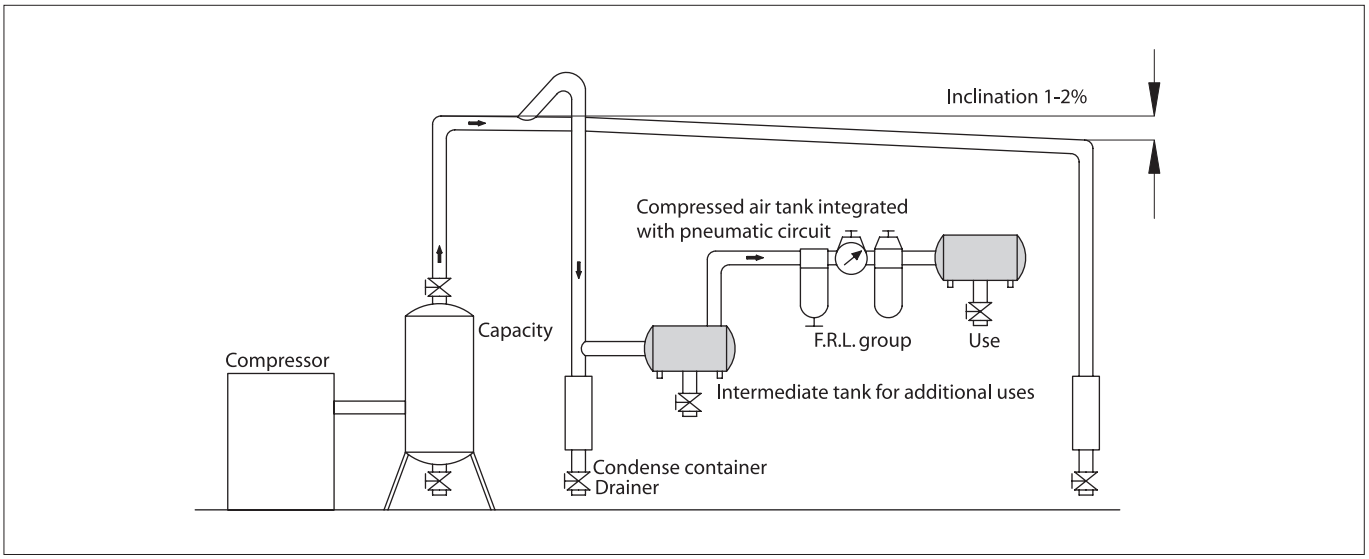

The operating safety and lifespan of the pneumatic devices depend to a considerable degree upon the proper preparation of the compressed air that feeds them, which is obtained by means of a series of devices that are located upstream of the part of the apparatus described so far, but before the actual pneumatic system.

The ***DEVICES FOR THE TREATMENT OF THE COMPRESSED AIR*** are basically constituted by: **FILTERS, PRESSURE REGULATORS, LUBRICATORS;** and by extension, their components: **MANOMETERS, PROGRESSIVE STARTING VALVES, INSERTION AND SECTIONING VALVES AND TANKS.**

FILTERS

The impurities contained in the air: waste materials, powder, rust and humidity that condenses, can cause serious damage to the pneumatic components, compromising their functioning and duration, as they facilitate the wear of the flowing surfaces and the seals.
The **FILTERS** have the important function of purifying the compressed air of solid particles and, as a collateral effect associated with their operating characteristics, also of a percentage of the liquid ones.
The filters are constituted by: a body with threaded ports, a transparent cup screwed onto it and a filtering cartridge.
The compressed air to be filtered is conveyed in a tangential direction from the supply mouth to the cup, where it assumes a cyclonic movement which enables the separation of the larger solid particles and a good part of the liquid particles; both collect on the bottom of the cup, from where they are discharged on a regular basis.
The finer solid particles, on the other hand, are captured by the filtering cartridge, which is made from sintered material (bronze, ceramic material&).
Depending on its characteristics, the filtering cartridge captures solid particles of an average diameter of 40, 20 or 5 micron.
It is not possible **in any case** to restrain the liquid particles that do not collect on the bottom of the cup as they are drawn and pass the barrier.
Consequently the effect of separation of the condensation, which is introduced by the filter, is a secondary one; it is necessary to take care to discharge the condensation that is produced otherwise a dynamic equilibrium is produced in which as much condensation is removed as is produced.
The filters are normally equipped with a separator, beneath the cartridge, whose task is to keep the slimy liquid deposited still; levels above the separator must be discharged.
It is always advisable to choose a larger size filter in order to have the benefits of a large cup, considerable cooling of the air and good separation of the impurities.
It is NOT in any case possible to hold back sufficient liquid particles to achieve the effective extraction of oil from the air: it is just a matter of time before the oil, which is not filtered upstream, reaches the pneumatic components.
A considerable percentage of humidity will also always be present in the air downstream of the filter. In order to eliminate the oil of the air compressor, it is necessary to adopt special oil extraction filters.
The choice of the cartridge depends on the degree of cleanliness necessary for the air to be used in the system.
The more complex the system, with small and fast-moving components, the greater must be the degree of filtration of the cartridge.
The ideal filter is a component that does not introduce falls in pressure. Actually, a fall of pressure always exists around a filter and depends largely on the degree of filtration.
It is advisable to limit the fall of pressure to 0.2 ÷ 0.3 bar, as the production costs of compressed air are very high and, if it is wished to maintain the supply pressure of the components constant, each fall in pressure translates into greater pressure to be generated by the compressor.
The filtering cartridge gets dirty very easily: if cleaning is neglected the flow of air across the filter can be greatly reduced; furthermore, in order to minimize falls in pressure, it is wise to clean it frequently, removing the grease from it and drying it.

CHOOSING THE SIZE OF THE FILTERS

It is necessary to adapt the filters to the flow required by the system, or section of the system, which they feed.
The characteristic **"FALL IN PRESSURE - FLOW"** curves of the filter are used for this purpose. They associate the variation in the falls in pressure around the filter with the variation of the flow and indicate the range of use (useful flow interval) of the component in an immediately comprehensible manner.
The range of use increases with the increase in the dimensions of the filter (of its ports).

type: **A12F**

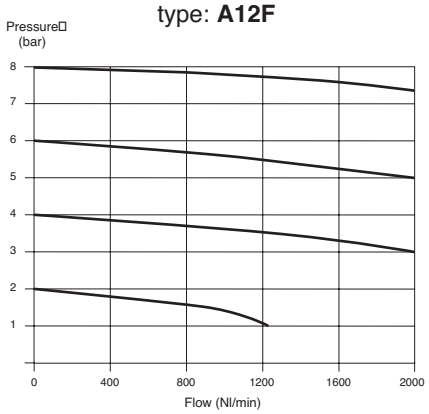

It is advisable to choose a filter of such dimensions that, at the requested flow, the fall in pressure is maintained within the limits indicated above. In this case the filter also works well for the separation of the condensation.
An under-sized filter causes excessive falls in pressure, whilst the filtering effect is poor.
Normally a filter capable of providing the required flow, without high filtering capacities, but suitable for the supply of compressed air to the valves and pneumatic cylinders, is installed at the beginning of a system. Filters that provide better quality air are installed downstream of the derived devices - with a lower flow - that require it.

PRESSURE REGULATORS

Pressure adjustment is always necessary upstream of a pneumatic device: it prevents falls of pressure in the network from distorting the conditions of use.

The performance of valves and pneumatic cylinders are highly dependant on the value of the supply pressure. Some components require precise and constant pressures in order to work properly.

A pressure regulator is always installed upstream of the system, and its task is to maintain the operating pressure at the output opening constant with the variation of the flow and the constant pressure in the tank.

Rapid and considerable variations in flow, corresponding to consumption peaks, tend to cause falls in pressure that can be controlled by the use of suitably sized reserve tanks.

The reduced operating pressure is less than the output pressure of the compressor; both must be appropriately controlled. Indeed, whilst it is true that lower material costs and, at an equivalent power, lower flows of used air would be incurred by making the pneumatic components function at high pressure, it is equally true that the production costs of compressed air are very high and increase considerably with the increase in the value of the pressure at which the air is supplied.

If the thermodynamic efficiency of the compressor - which is notoriously bad and decreases with the increase in the final pressure - is multiplied by the bad conversion efficiency of mechanical energy into pressure energy, a very low final efficiency figure is obtained that justifies the high production costs of compressed air.
In addition, it is necessary to consider the fact that it is, in practice, impossible to eliminate the losses of compressed air, which increase proportionately with the pressure.

On average, a system can lose up 20% of its compressed air through bad connections in correspondence with fittings and plugs.

In the presence of two cost causes, one increasing and the other decreasing in relation to the pressure, it is possible to identify a pressure value that corresponds to the minimum cost.

The optimum **operating** pressure has long been established as **6 bar**. The pressure in the tank must be that much higher in order to guarantee its cooling and energy flywheel functions.

Pressure regulators are basically constituted by:
- a body, divided into a bell (with hand-wheel for adjustments and spring) and an actual valve body (with obturator disc) equipped with threaded openings.
- a membrane between the two parts.

The air that arrives from the supply port is blocked (or allowed to pass) by an obturator disc which is opened and closed by means of a small rod controlled by the membrane in equilibrium between the two forces: one, above, (caused by a charged spring or a pressure) that is preset; the other, below, caused by the reduced pressure in the pipe downstream of the regulator.
Each variation in flow causes a temporary variation of the reduced pressure and thus an imbalance in these two forces that causes the movement of the membrane with the consequent opening or closure of the disc.
A reduction in flow causes the following temporary effects: an increase in the reduced pressure with the closure of the disc; an increase in the pressure fall, due to the reduction of the passage space and a decrease in the reduced pressure, with oscillations around the point of equilibrium, until it returns the previous value, which is the only one capable of balancing the preset force.
An increase in flow causes: a decrease in the reduced pressure; the opening of the disc; a decrease in the pressure fall, due to the increased passage space and an increase in the reduced pressure until it returns to the previous value.

In both cases the pressure regulator restores the conditions of equilibrium with a new position of the obturator disc, which is suited to the changed flow demand.

In the case of constant supply pressure and highly variable flows, the pressure regulators are **self-adjusting**; i.e. they maintain the reduced pressure basically constant.

The greater the dimensions of the membrane, the greater the sensitivity of the reducer and its ability to maintain the reduced pressure constant.

CHOOSING THE SIZE OF THE PRESSURE REGULATORS

type: **A12RR**

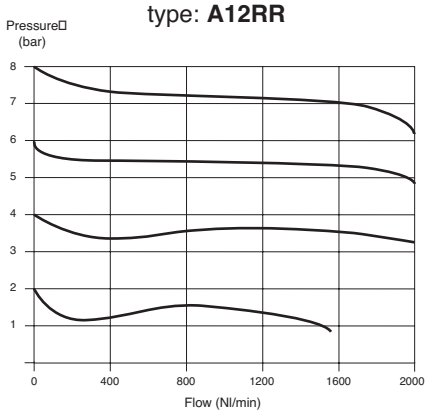

The characteristic **"FALL IN REDUCED PRESSURE - FLOW"** curves are used for this purpose as they provide the range of use of the component in an immediately comprehensible manner.
It is always advisable to choose a regulator capable of supplying the flow of air required by the system, upstream of which it is installed, with as low a possible fall in reduced pressure: max. 0.5 bar.

The range of use of the regulator is associated with the dimensions of the ports used (standardized) and thus to the dimensions of the regulator. In order to achieve sensitivity, speed of response and small falls, it is necessary to choose large bodies with large membranes.
Two basic types of regulators can be identified:
- precision regulators, with large membranes
- commercial regulators, where the aesthetic aspect is important.

In order to achieve the most precise and easiest setting of the pressure, various **ranges of reduced pressure** are supplied for each type of regulator, by equipping them with pre-charging springs with different elastic constants.

Another significant construction characteristic for the choice of a regulator is the presence of a device that enables excess pressure in relation to the preset reduced value to be discharged into the atmosphere; in the absence of flow, this is achieved by simply varying the charge of the spring.

This process, known as **relieving**, consists in equipping the membrane with a hole with a seal upon which the controlled rod rests. As the disc reaches the end of its stroke against the closure opening, each further increase in pressure raises the membrane above the rod, releasing the air from a hole in the bell until equilibrium is restored.

LUBRICATORS

The pneumatic devices are equipped with mechanical organs with relative movement and consequently require lubrication, which is also important in order to limit wear of the seals.
Valves and pneumatic cylinders are currently supplied with **assembly lubrication**, which is capable of ensuring them a long life **in normal working conditions**.
Lubrication is necessary in the case of pneumatic tools and particular working conditions (e.g. components that operate at high speeds or in the presence of high temperatures, which are conditions that cause the assembly lubrication to evaporate and be removed by the air).
Lubrication is performed by lubricating the air that flows through the components with mineral oil that does not contain additives that could corrode the seals.
The task of the **LUBRICATORS** is to dose the air with a certain quantity of nebulized oil.
The air itself transports the oil along stretches of piping, the length of which increases as the size of the drops of the micro-mist decrease.
The lubricators are made up of:
- a body with threaded ports, containing a Venturi connected by means of a small tube
- a cup, to be screwed onto the body, into which the lubricating oil is poured.

The air, entering from the supply opening, crosses the Venturi constriction, where it creates a reduction in pressure that draws the oil from the cup through the small tube, nebulizing it and sending into the pipes.
An adjustment screw makes it possible to regulate the quantity of oil introduced.
There is a **minimum operating flow**, characteristic of each range of lubricators, beneath which a sufficient fall in pressure is not achieved in the constriction and consequently the oil is not drawn.

CHOOSING THE SIZE OF THE LUBRICATORS

The characteristic **"FALL IN PRESSURE - FLOW"** curves are used for this purpose as they permit the rapid identification of the range of use.
It is advisable to choose the lubricator in such a way as to limit the falls of pressure.
The flows provided are, as always, associated with the dimensions and thus to the ports of the lubricator.

Notes

Executions			
Version	Symbol	Code	Item
Filter-regulator + lubricator	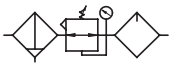	090100	A14FRRL
Filter-regulator	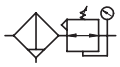	090101	A14FRR
Filter		090102	A14F
Regulator		090103	A14R
Lubricator		090104	A14L





Series of modular units with the following standard features :
- Regulators with relieving valve
- Filters standard with 25μ cartridge
- Filters with semi-automatic condense drain
- Cup with protection

The gauges are to be ordered separately; for gauges see from page 3.50.1

For mounting accessories, assembling kits and spare parts see from page 3.5.1

How to order: A14FRR5TM

A14FRR	5	TM
Version	Option	Option

Options	Suffix
Filter 5 μ cartridge	5
Metal cup	TM
With regulation range 0,5÷4 bar	04

Technical data		
Fluid	Compressed air	
Maximum pressure	10 bar	
Regulation range	0,5 ÷ 8,5 bar	
Flow at 6 bar (Nl/min)	A14FRRL = 500; A14FRR = 750; A14F = 750; A14R = 550; A14L = 800	
Temperature range	0 ÷ 60 °C	
Suggested oil	With ISO VG 32 viscosity conforming to ISO 3448 standards	
Cup capacity	Filter : 15 cm^3	Lubricator : 25 cm^3
Filtering element	Standard 25 μ - On request 5 μ	
Condense drain	Standard semi-automatic	
Materials	Body and cup protection	Painted aluminium
	Regulation group	Plastic
	Condense drain	Nickel plated brass
	Filtering element	Sintered bronze
	Diaphragm	Nitrile rubber (NBR)
	Cup and sight glass	Polycarbonate
	Springs	Steel

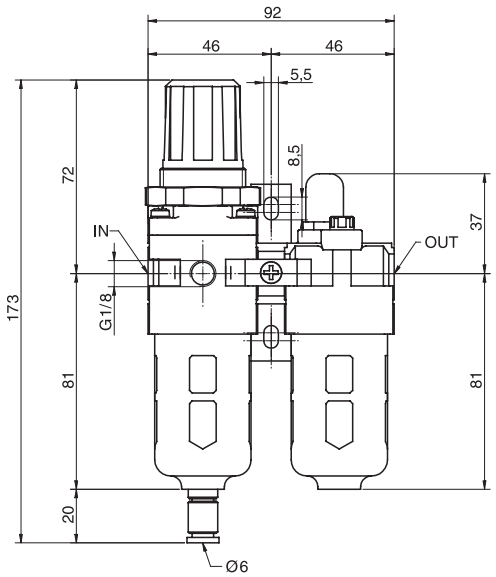

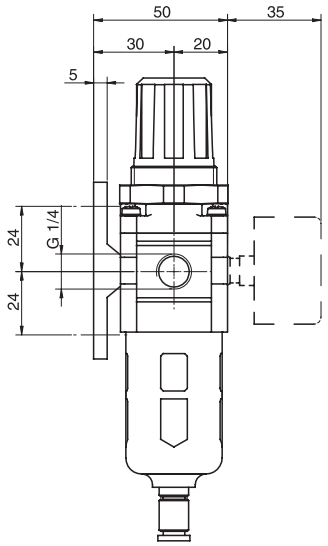

Version	Symbol	Code	Item
Filter-regulator + lubricator	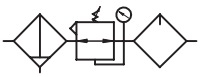	090100	A14FRRL

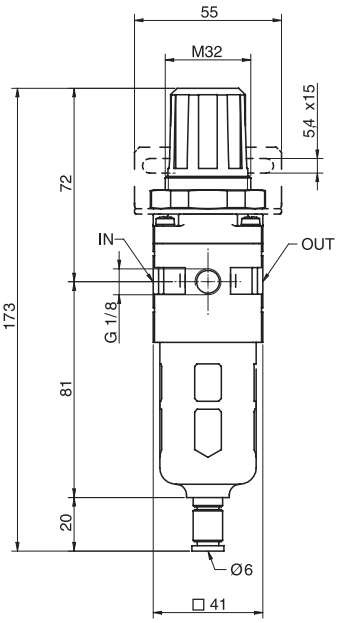

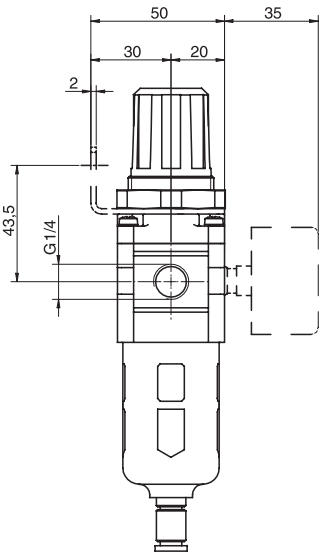

Version	Symbol	Code	Item
Filter-regulator	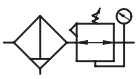	090101	A14FRR

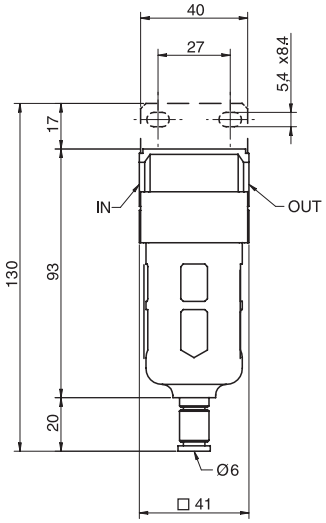

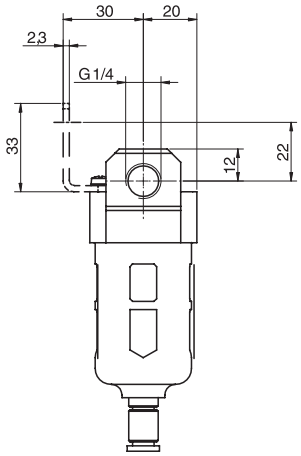

Version	Symbol	Code	Item
Filter		090102	A14F

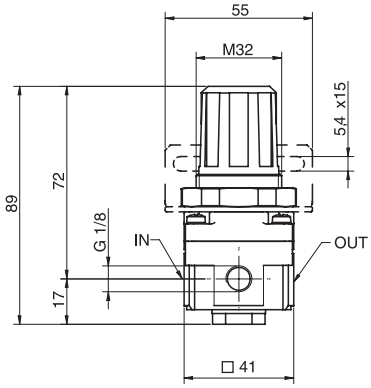

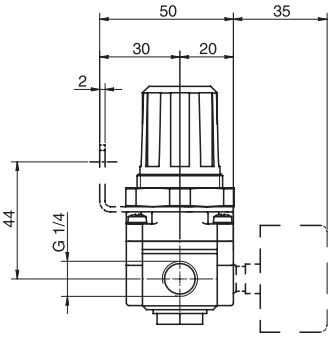

Version	Symbol	Code	Item
Regulator		090103	A14R

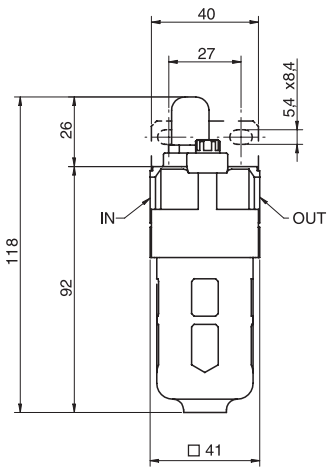

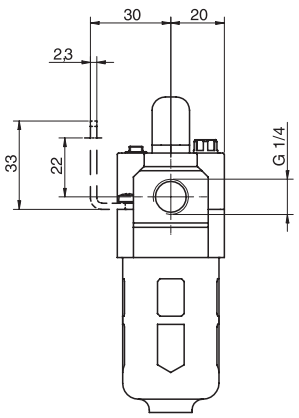

Version	Symbol	Code	Item
Lubricator		090104	A14L

Executions			
Version	Symbol	Code	Item
Filter-regulator + lubricator	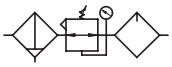	090105	A38FRRL
Filter-regulator	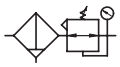	090106	A38FRR
Filter		090107	A38F
Regulator		090108	A38R
Lubricator		090109	A38L





Series of modular units with the following standard features :
- Regulators with relieving valve
- Filters standard with 25μ cartridge
- Filters with semi-automatic condense drain
- Cup with protection

The gauges are to be ordered separately; for gauges see from page 3.50.1

For mounting accessories, assembling kits and spare parts see from page 3.5.1

How to order: A38F5SA

A38F	5	SA
Version	Option	Option

Options	Suffix
Filter 5 μ cartridge	5
Automatic condense drain for filters	SA
Metal cup	TM
With regulation range 0,5÷4 bar	04

Technical data		
Fluid	Compressed air	
Maximum pressure	10 bar	
Regulation range	0,5 ÷ 8,5 bar	
Flow at 6 bar (Nl/min)	A38FRRL = 1700; A38FRR = 2000; A38F = 1500; A38R = 2500; A38L = 1700	
Temperature range	0 ÷ 60 °C	
Suggested oil	With ISO VG 32 viscosity conforming to ISO 3448 standards	
Cup capacity	Filter : 20 cm^3	Lubricator : 50 cm^3
Filtering element	Standard 25 μ - On request 5 μ	
Condense drain	Standard semi-automatic - On request automatic	
Materials	Body and cup protection	Painted aluminium
	Regulation group	Plastic
	Condense drain	Nickel plated brass
	Filtering element	Sintered bronze
	Diaphragm	Nitrile rubber (NBR)
	Cup and sight glass	Polycarbonate
	Springs	Steel

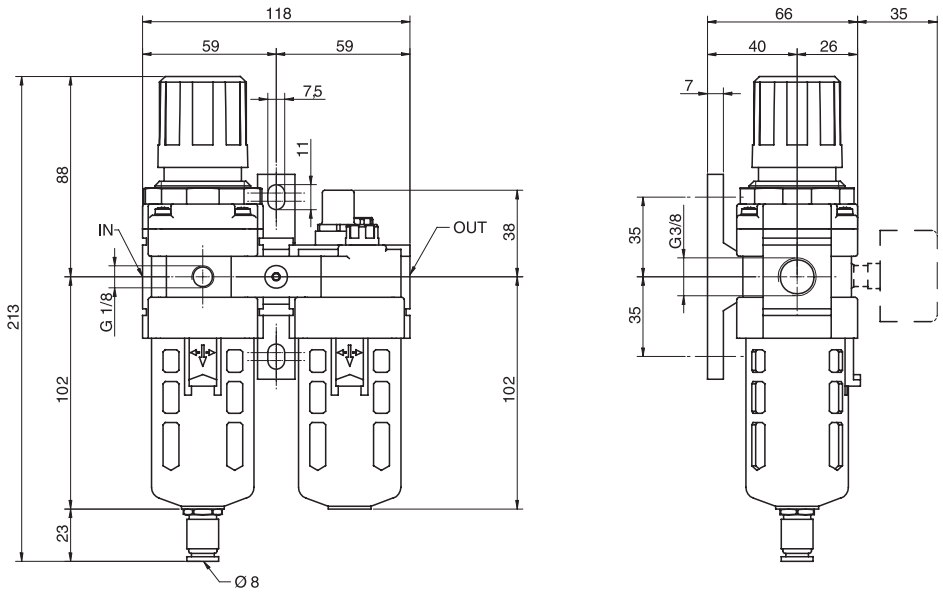

Version	Symbol	Code	Item
Filter-regulator + lubricator	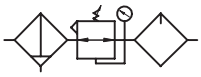	090105	A38FRRL

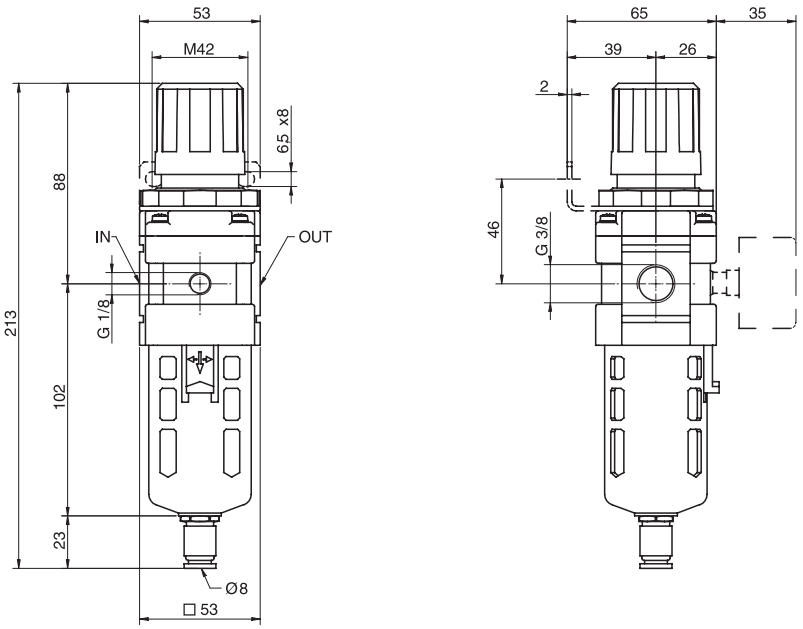

Version	Symbol	Code	Item
Filter-regulator	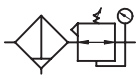	090106	A38FRR

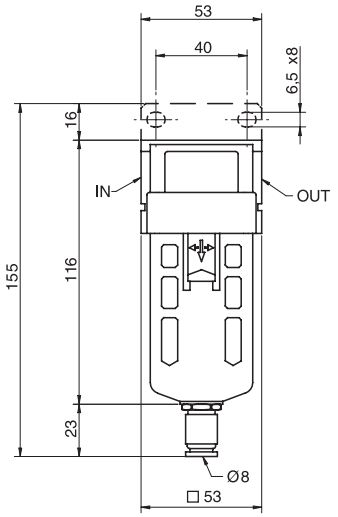

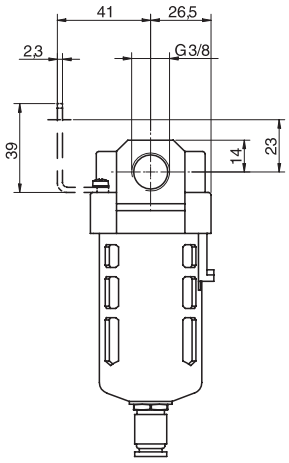

Version	Symbol	Code	Item
Filter		090107	A38F

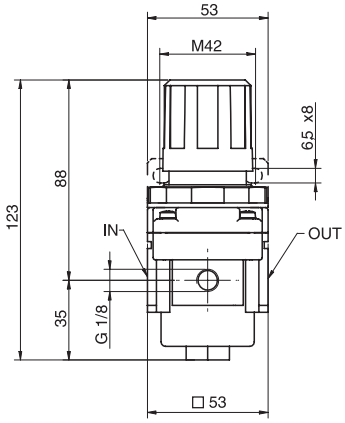

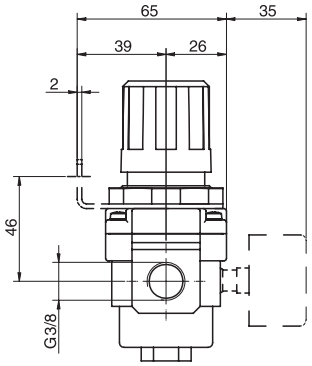

Version	Symbol	Code	Item
Regulator		090108	A38R

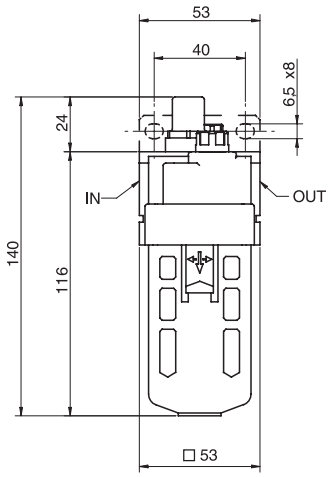

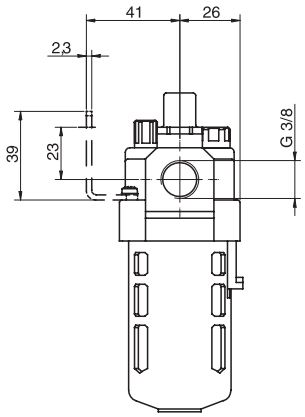

Version	Symbol	Code	Item
Lubricator		090109	A38L

Executions			
Version	Symbol	Code	Item
Filter-regulator + lubricator	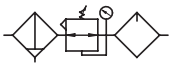	090110	A12FRRL
Filter-regulator	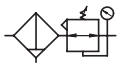	090111	A12FRR
Filter		090112	A12F
Regulator		090113	A12R
Lubricator		090114	A12L



Series of modular units with the following standard features :
- Regulators with relieving valve
- Filters standard with 25μ cartridge
- Filters with semi-automatic condense drain
- Cup with protection

The gauges are to be ordered separately; for gauges see from page 3.50.1

For mounting accessories, assembling kits and spare parts see from page 3.5.1

How to order: A12FRR04SA

A12FRR	04	SA
Version	Option	Option

Options	Suffix
Filter 5 μ cartridge	5
Automatic condense drain for filters	SA
Metal cup	TM
With regulation range 0,5÷4 bar	04

Technical data		
Fluid	Compressed air	
Maximum pressure	10 bar	
Regulation range	0,5 ÷ 8,5 bar	
Flow at 6 bar (Nl/min)	A12FRRL = 3000; A12FRR = 4000; A12F = 4000; A12R = 6000; A12L = 5000	
Temperature range	0 ÷ 60 °C	
Suggested oil	With ISO VG 32 viscosity conforming to ISO 3448 standards	
Cup capacity	Filter : 45 cm^3	Lubricator : 130 cm^3
Filtering element	Standard 25 μ - On request 5 μ	
Condense drain	Standard semi-automatic - On request automatic	
Materials	Body and cup protection	Painted aluminium
	Regulation group	Plastic
	Condense drain	Nickel plated brass
	Filtering element	Sintered bronze
	Diaphragm	Nitrile rubber (NBR)
	Cup and sight glass	Polycarbonate
	Springs	Steel

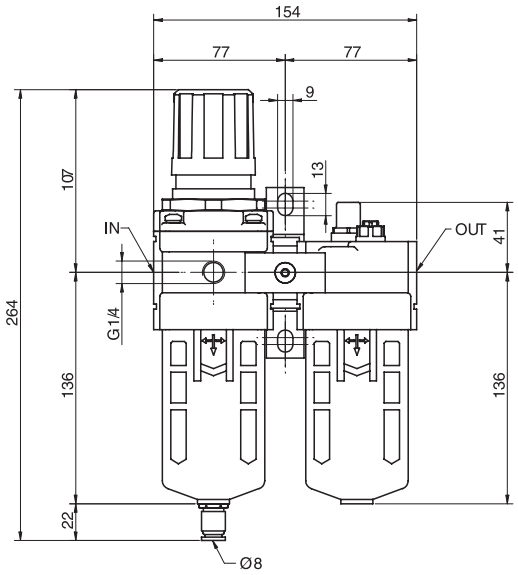

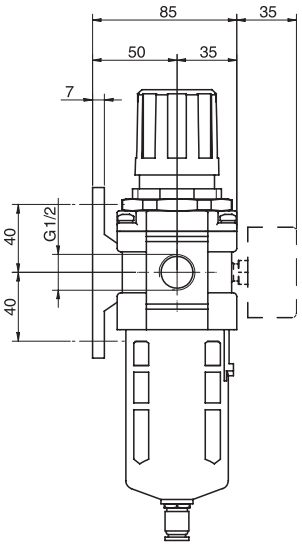

Version	Symbol	Code	Item
Filter-regulator + lubricator	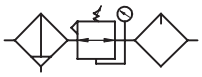	090110	A12FRRL

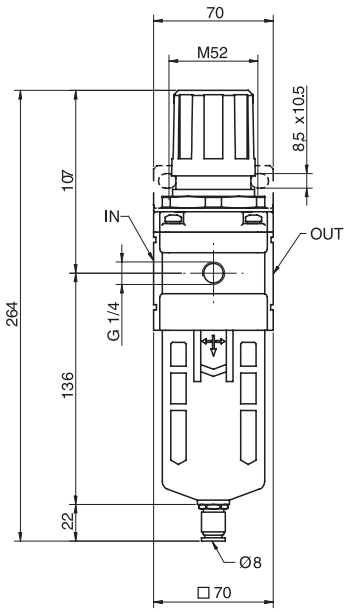

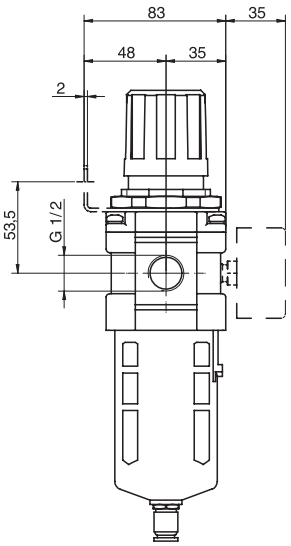

Version	Symbol	Code	Item
Filter-regulator	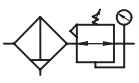	090111	A12FRR

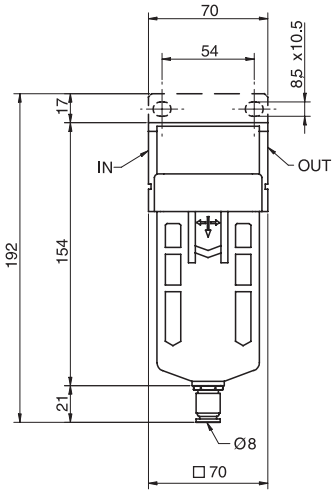

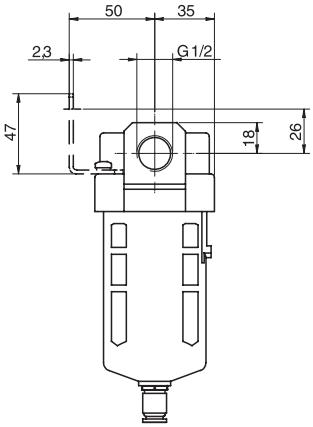

Version	Symbol	Code	Item
Filter		090112	A12F

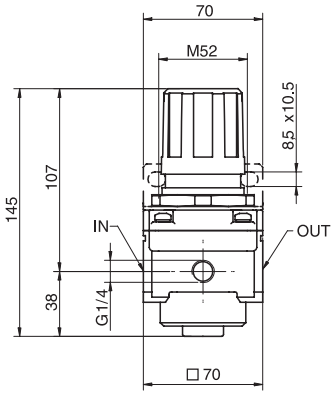

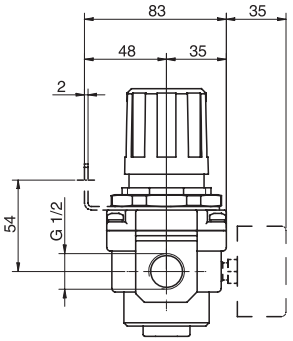

Version	Symbol	Code	Item
Regulator		090113	A12R

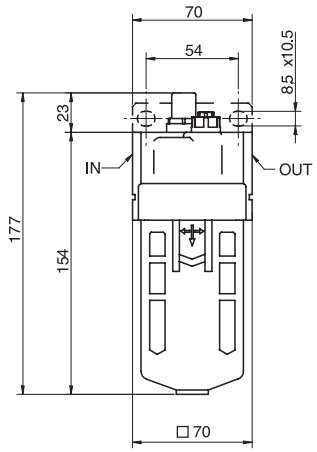

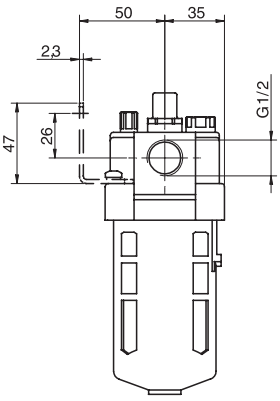

Version	Symbol	Code	Item
Lubricator		090114	A12L

Executions			
Version	Symbol	Code	Item
Filter-regulator + lubricator	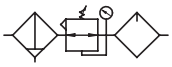	090115	A01FRRL
Filter-regulator	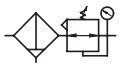	090116	A01FRR
Filter		090117	A01F
Regulator		090118	A01R
Lubricator		090119	A01L



Series of modular units with the following standard features :
- Regulators with relieving valve
- Filters standard with 25μ cartridge
- Filters with semi-automatic condense drain
- Cup with protection

The gauges are to be ordered separately; for gauges see from page 3.50.1

For mounting accessories, assembling kits and spare parts see from page 3.5.1

How to order: A01FTMSA

Options	Suffix
Filter 5 μ cartridge	5
Automatic condense drain for filters	SA
Metal cup	TM
With regulation range 0,5÷4 bar	04

A01F	TM	SA
Version	Option	Option

Technical data		
Fluid	Compressed air	
Maximum pressure	10 bar	
Regulation range	0,5 ÷ 8,5 bar	
Flow at 6 bar (Nl/min)	A01FRRL = 4000; A101FRR = 5500; A01F = 7000; A01R = 8000; A01L = 7000	
Temperature range	0 ÷ 60 °C	
Lubrificante consigliato	With ISO VG 32 viscosity conforming to ISO 3448 standards	
Cup capacity	Filter : 130 cm^3	Lubricator : 130 cm^3
Elemento filtrante	Standard 25 μ - A richiesta 5 μ	
Filtering element	Standard semi-automatic - On request automatic	
Materials	Body and cup protection	Painted aluminium
	Regulation group	Plastic
	Condense drain	Nickel plated brass
	Filtering element	Sintered bronze
	Diaphragm	Nitrile rubber (NBR)
	Cup and sight glass	Polycarbonate
	Springs	Steel

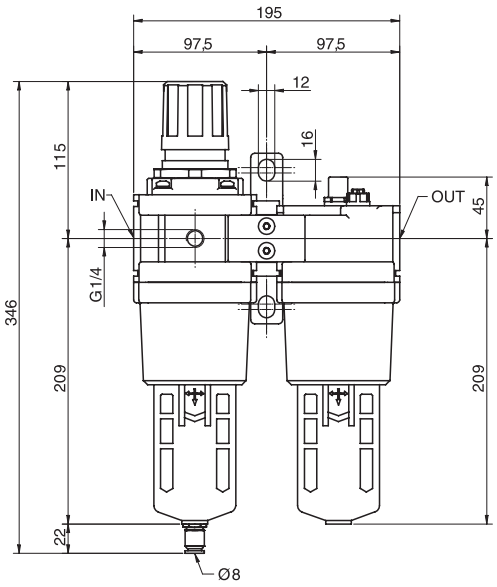

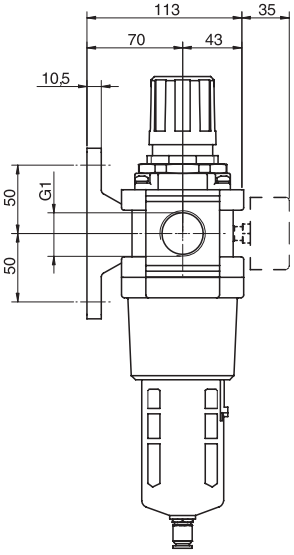

Version	Symbol	Code	Item
Filter-regulator + lubricator	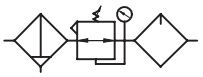	090115	A01FRRL

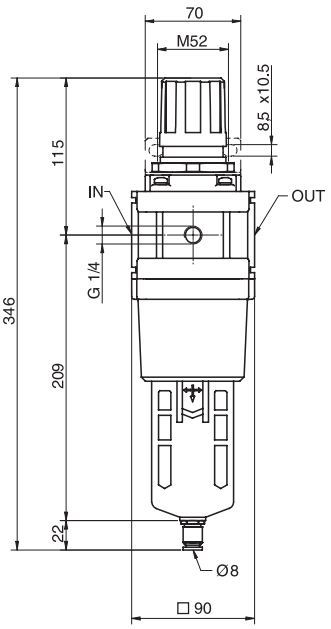

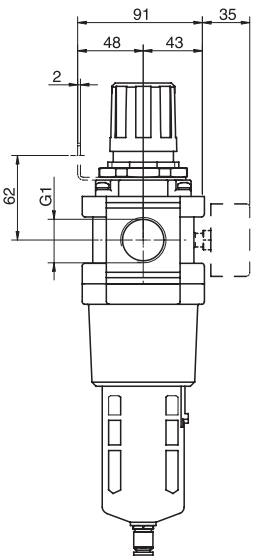

Version	Symbol	Code	Item
Filter-regolator	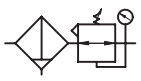	090116	A01FRR

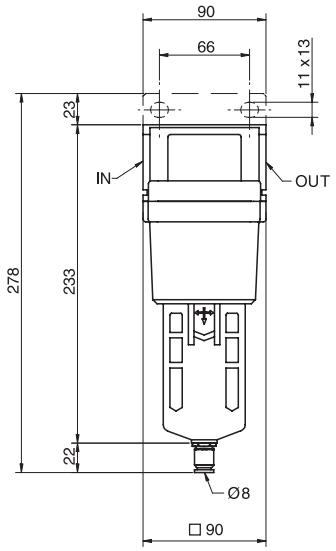

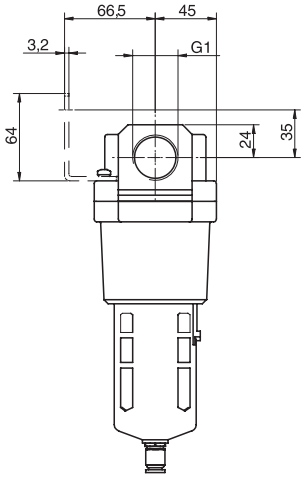

Version	Symbol	Code	Item
Filter		090117	A01F

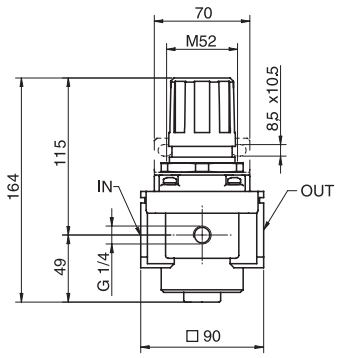

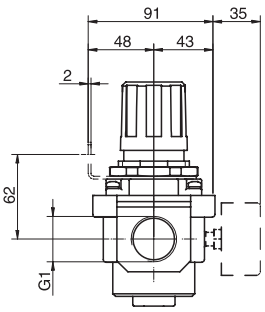

Version	Symbol	Code	Item
Regulator		090118	A01R

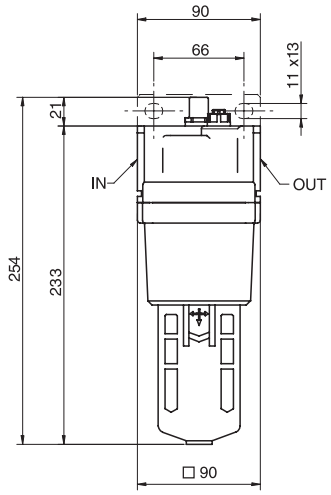

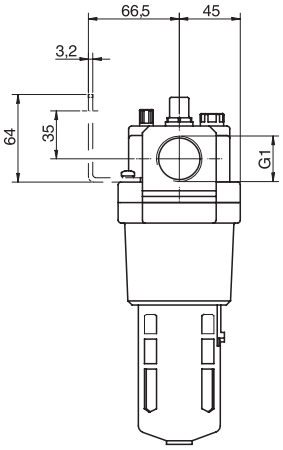

Version	Symbol	Code	Item
Lubricator		090119	A01L

Executions	
Version	Type
TMetal cup for filter	TM..F
Metal cup for lubricator	TM..L
“T” porting block	DT..
“L” spacer with bracket	DSL..
“L” bracket	SL..
“T” spacer with bracket	DST..
“T” bracket	ST..
Bracket for regulator and filter-regulator	SR..
Bracket for filter and lubricator	SFL..
Spacer	D..
Manual condense drain valve	VMS..
Polycarbonate cup for filter with metal protection	TP..F
Polycarbonate cup for lubricator with metal protection	TP..L
Standard filter cartridge (25 μ)	CA../25
Filter cartridge 5 μ	CA../5
Diaphragm for regulator	DF..
Oil regulation kit	OL..
Cup seal	ORT..









Cup for filter

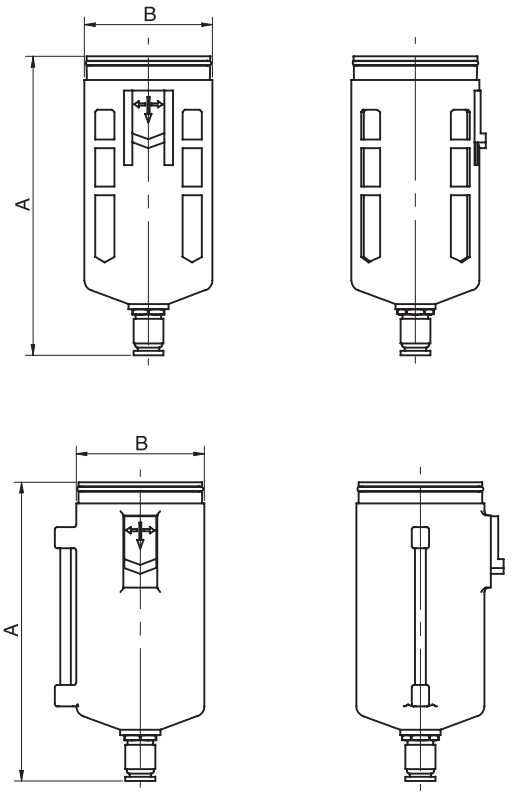

Polycarbonate with metal protection				
Code	Size	Item	A	B
090155	1/4”	TP14F	92	36
090156	3/8”	TP38F	114	44
090157	1/2”	TP12F	140	60
090158	1”	TP01F	140	60

Metal cup				
Code	Size	Item	A	B
090121	1/4”	TM14F	92	36
090122	3/8”	TM38F	114	44
090123	1/2”	TM12F	140	60
090124	1”	TM01F	140	60

Cup for lubricator

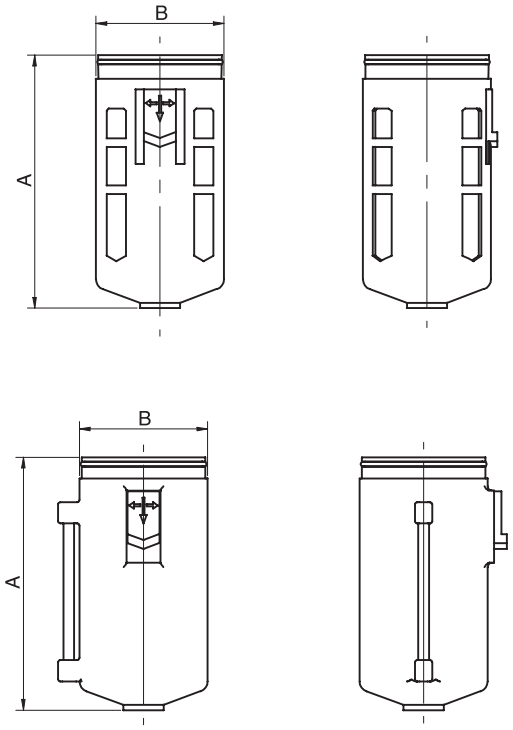

Polycarbonate with metal protection				
Code	Size	Item	A	B
090159	1/4”	TP14L	72	36
090160	3/8”	TP38L	90	44
090161	1/2”	TP12L	118	60
090162	1”	TP01L	118	60

Metal cup				
Code	Size	Item	A	B
090125	1/4”	TM14L	72	36
090126	3/8”	TM38L	90	44
090127	1/2”	TM12L	118	60
090128	1”	TM01L	118	60

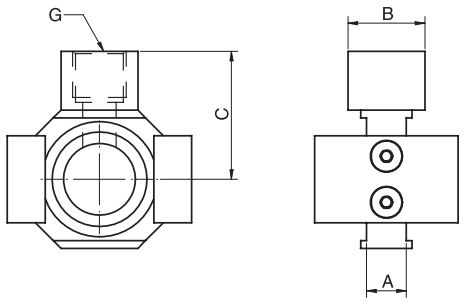

"T" porting block (only for F+RR+L)

Code	Item	Size	A	B	C	G
090129	DT14	1/4"	10	19	29	1/4"
090130	DT38	3/8"	11	19	33	1/4"
090131	DT12	1/2"	14	24	39	3/8"
090132	DT01	1"	15	30	50,5	1/2"

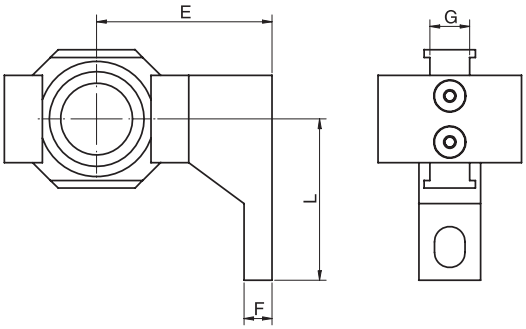

"L" spacer with bracket

Code	Item	Size	E	F	L	G
090133	DSL14	1/4"	30	5	33	10
090134	DSL38	3/8"	41	7	45	11
090135	DSL12	1/2"	50	7	50	14
090136	DSL01	1"	69,8	10,5	63	15

For bracket dimensions see below table (type SL)

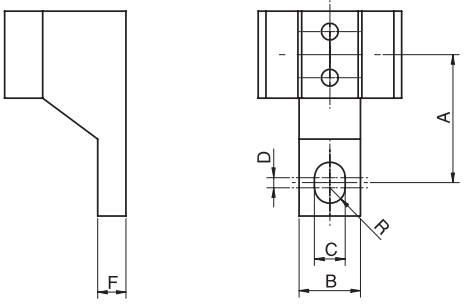

"L" bracket

Code	Item	Size	A	B	C	D	F	R
090163	SL14	1/4"	24	15	5,5	3	5	2,75
090164	SL38	3/8"	35	16	7	4	7	3,5
090165	SL12	1/2"	40	22	9	4	7	4,5
090166	SL01	1"	50	23	12	4	10,5	6

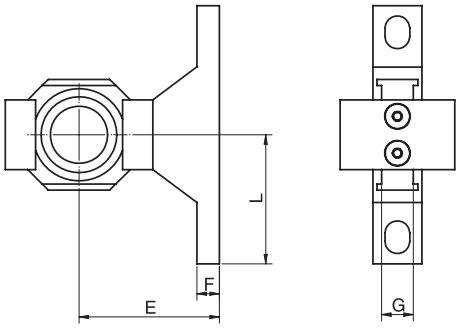

"T" spacer with bracket

Code	Item	Size	E	F	L	G
090137	DST14	1/4"	30	5	33	10
090138	DST38	3/8"	41	7	45	11
090139	DST12	1/2"	50	7	50	14
090140	DST01	1"	69,8	10,5	63	15

For bracket dimensions see next page table (type ST)

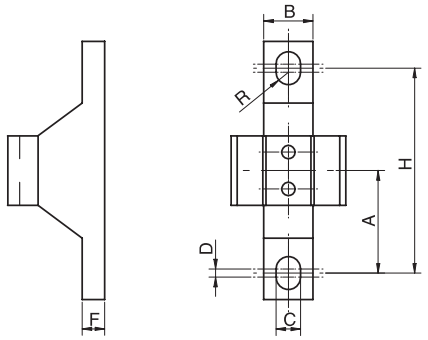

"T" bracket

Code	Item	Size	A	B	C	D	F	H	R
090167	ST14	1/4"	24	15	5,5	3	5	48	2,75
090168	ST38	3/8"	35	16	7	4	7	70	3,5
090169	ST12	1/2"	40	22	9	4	7	80	4,5
090170	ST01	1"	50	23	12	4	10,5	100	6

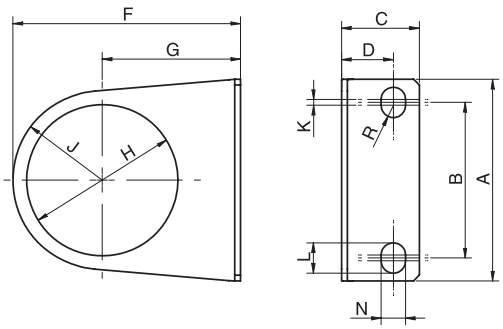

Bracket for regulator and filter-regulator

Code	Item	Size	A	B	C	D	F	G	H	J	K	L	N	R
090141	SR14	1/4"	55	34	25	19	50	30	33,5	20	1	15	5,4	2,7
090142	SR38	3/8"	53	40	21,5	14	64	39	42,5	25	1,5	8	6,5	3,25
090143	SR1201	1/2" - 1"	70	54	27	18	79,2	49,2	52,5	30	2	10,5	8,5	4,25

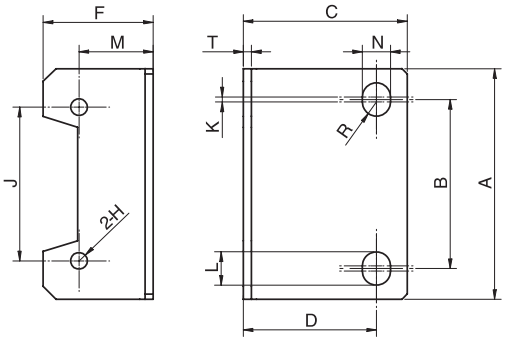

Bracket for filter and lubricator

Code	Item	Size	A	B	C	D	F	ΦH	J	K	L	M	N	R	T
090144	SFL14	1/4"	40	27	33	27	18	4,5	26	3	8,4	14	5,4	2,7	2,3
090145	SFL38	3/8"	53	40	39	32	22,5	4,5	35	1,5	8	19	6,5	3,25	2,3
090146	SFL12	1/2"	70	54	47	38	31,5	5,5	47	2	10,5	20	8,5	4,25	2,3
090147	SFL01	1"	90	66	64	52	43	6,5	60	2	13	29	11	5,5	3,2

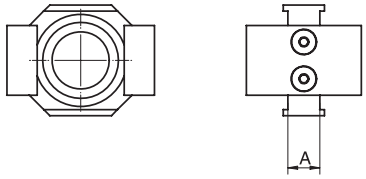

Spacer

Code	Item	Size	A
090148	D14	1/4"	10
090149	D38	3/8"	11
090150	D12	1/2"	14
090151	D01	1"	15

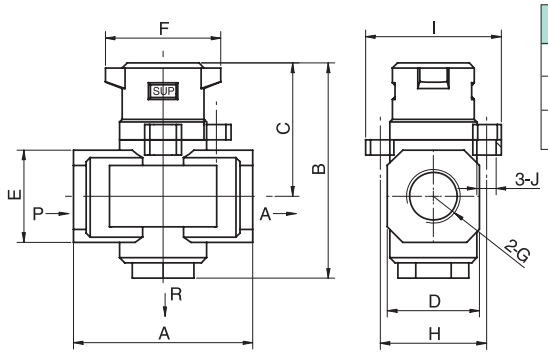

Manual condense drain valve

Code	Item	Size	G	R	A	B	C	D	E	F	H	I	J
090152	VMS14	1/4”	G1/4	G1/8	40	59	39	28	22	40	32	41	Ø6
090153	VMS38	3/8”	G3/8	G1/4	53	78	49	30	28	45	41,5	53	Ø7,5
090154	VMS12	1/2”	G1/2	G3/8	70	84	52	36	36	45	41,5	53	Ø7,5



Standard filter 25μ cartridge

Code	Size	Item
090171	1/4”	CA14/25
090172	3/8”	CA38/25
090173	1/2”	CA12/25
090174	1”	CA01/25

Filter 5μ cartridge

Code	Size	Item
090175	1/4”	CA14/5
090176	3/8”	CA38/5
090177	1/2”	CA12/5
090178	1”	CA01/5

Diaphragm for regulator

Code	Size	Item
090179	1/4”	DF14
090180	3/8”	DF38
090181	1/2”	DF12
090182	1”	DF01

Oil regulation kit

Code	Size	Item
090183	1/4”	OL14
090184	3/8”	OL38
090185	1/2”	OL12
090186	1”	OL01

Guarnizione tazza

Code	Size	Item
090187	1/4”	ORT14
090188	3/8”	ORT38
090189	1/2”	ORT12
090190	1”	ORT01

Executions			
Version	Symbol	Code	Item
1/8”	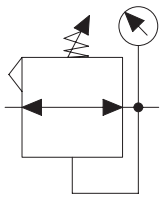	090301	AC400-1/8RR
1/4”		090305	AC400-1/4RR



Series of microregulators, standard with relieving valve.
Used to reduce and keep constant the out pressure.
Standard without gauge.

For gauges see page 3.50.1.
The mounting bracket is supplied together with the unit.

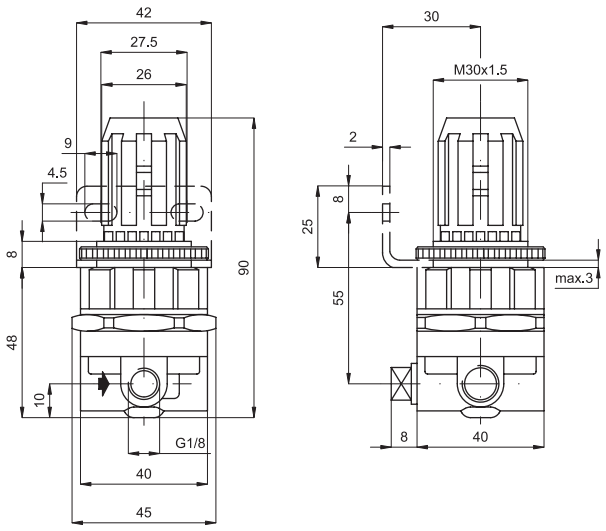

Technical data		
Fluid	Compressed air	
Maximum pressure	10 bar	
Regulation range	0,5 ÷ 8 bar	
Flow	1/8”= 300 l/min	1/4”= 550 l/min
Temperature range	0 °C ÷ + 60°C	
Materials	Acetal resin Seals: Nitrile rubber (NBR)	

Pressure-gauges Ø 40, 50 , 63 mm

Standard executions		
Version	Symbol	Type
With rear connection	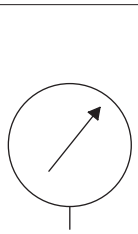	M
With in-line connection		MR
With rear connection and flange (3 holes)		MF
With rear connection and panel bracket		MP

Dial ø	40	50	63
Code	40	50	63

Connection	1/8”	1/4”
Code	A	B

Standard scales (bar)	-1 ÷ 0	0 ÷ 1	0 ÷ 2,5	0 ÷ 4	0 ÷ 6	0 ÷ 10	0 ÷ 12



Series of dry pressure-gauges available in various versions and scales.
Suitable to measure pressure in pneumatic installations.

* How to order: M40A0 ÷ 12

M	40	A	0 ÷ 12
Type	Dial code	Connection code	Scale

* For standard items, codes and dimensions see table from page 3.50.2.

3

Technical data				
Fluid	Compressed air			
Pressure	Constant: till 3/4 of the full scale			
	Variable: within 2/3 of the full scale			
	Pulsed: till the full scale			
Temperature range	-20 °C ÷ + 60°C			
Protection degree	IP41			
Precision	Class 1.6			
Threads	UNI-ISO 7/1 (BSPT)			
Materials		Type M-MR	Type MF	Type MP
	Housing	Black ABS	Chrome plated steel Black painted steel	Chrome plated steel
	Screen	Kostil		
	Connection	Brass OT58		
	Elastic element	Tubular spring in copper alloy		
	Moviment	Brass		
	Dial	White ABS with double scale (black = bar; red = PSI)		
	Welding	Sn/Pb alloy		

type: **M40A**

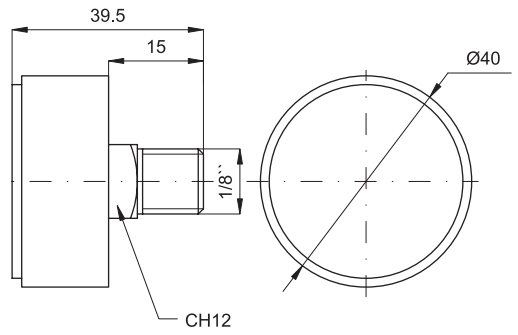

Code	Item	Scale (bar)
028501	M40A-1÷0	-1 ÷ 0
028601	M40A0÷1	0 ÷ 1
028651	M40A0÷2,5	0 ÷ 2,5
028701	M40A0÷4	0 ÷ 4
028801	M40A0÷6	0 ÷ 6
028851	M40A0÷10	0 ÷ 10
028901	M40A0÷12	0 ÷ 12

type: **M50**

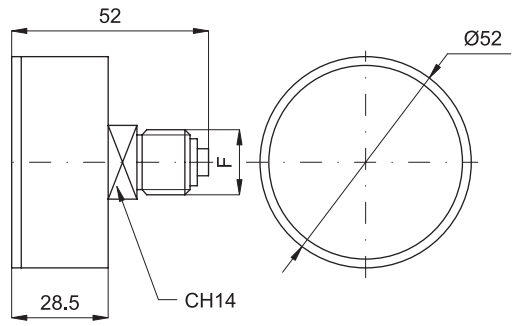

Code	Item	Scale (bar)	F
028502	M50A-1÷0	-1 ÷ 0	1/8”
028602	M50A0÷1	0 ÷ 1	
028900	M50A0÷2,5	0 ÷ 2,5	
028702	M50A0÷4	0 ÷ 4	
028802	M50A0÷6	0 ÷ 6	
028915	M50A0÷10	0 ÷ 10	
028902	M50A0÷12	0 ÷ 12	

Code	Item	Scale (bar)	F
028925	M50B-1÷0	-1 ÷ 0	1/4”
028972	M50B0÷1	0 ÷ 1	
028994	M50B0÷2,5	0 ÷ 2,5	
028917	M50B0÷4	0 ÷ 4	
028992	M50B0÷6	0 ÷ 6	
028993	M50B0÷10	0 ÷ 10	
028913	M50B0÷12	0 ÷ 12	

type: **M63B**

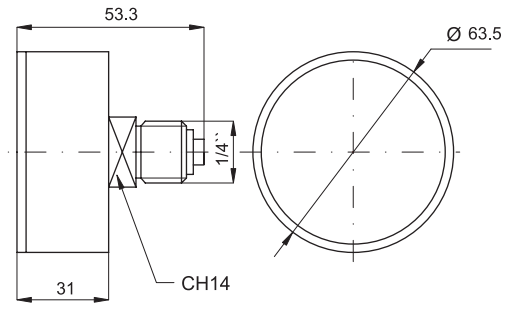

Code	Item	Scale (bar)
028503	M63B-1÷0	-1 ÷ 0
028603	M63B0÷1	0 ÷ 1
028995	M63B0÷2,5	0 ÷ 2,5
028703	M63B0÷4	0 ÷ 4
028803	M63B0÷6	0 ÷ 6
028996	M63B0÷10	0 ÷ 10
028903	M63B0÷12	0 ÷ 12

type: **MR40A**

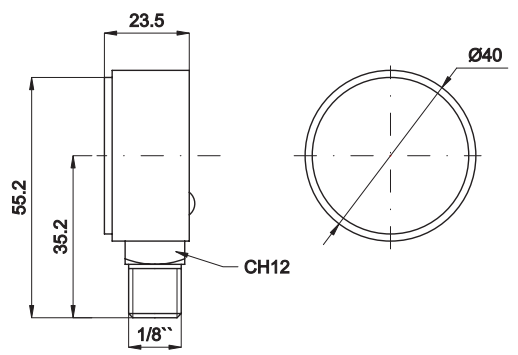

Code	Item	Scale (bar)
028504	MR40A-1÷0	-1 ÷ 0
028604	MR40A0÷1	0 ÷ 1
028654	MR40A0÷2,5	0 ÷ 2,5
028704	MR40A0÷4	0 ÷ 4
028804	MR40A0÷6	0 ÷ 6
028997	MR40A0÷10	0 ÷ 10
028904	MR40A0÷12	0 ÷ 12

type: **MR50**

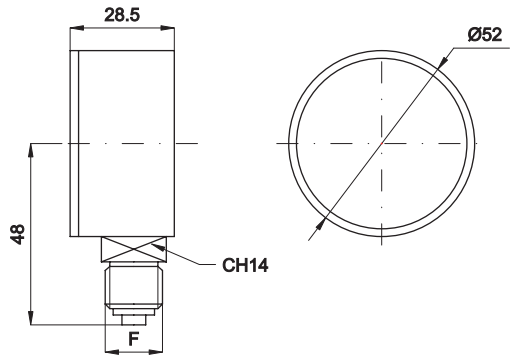

Code	Item	Scale (bar)	F
028505	MR50A -1÷0	-1 ÷ 0	1/8”
028605	MR50A0÷1	0 ÷ 1	
028998	MR50A0÷2,5	0 ÷ 2,5	
028705	MR50A0÷4	0 ÷ 4	
028805	MR50A0÷6	0 ÷ 6	
028999	MR50A0÷10	0 ÷ 10	
028914	MR50A0÷12	0 ÷ 12	

Code	Item	Scale (bar)	F
029000	MR50B -1÷0	-1 ÷ 0	1/4”
029007	MR50B0÷1	0 ÷ 1	
029008	MR50B0÷2,5	0 ÷ 2,5	
028976	MR50B0÷4	0 ÷ 4	
028977	MR50B0÷6	0 ÷ 6	
029009	MR50B0÷10	0 ÷ 10	
028905	MR50B0÷12	0 ÷ 12	

type: **MR63B**

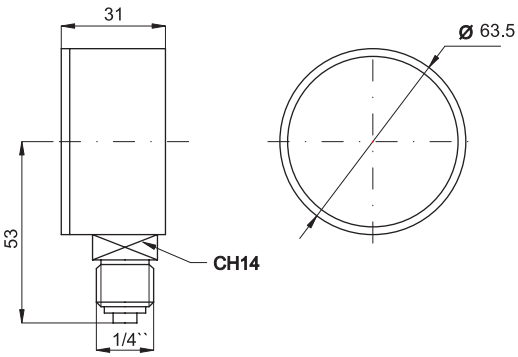

Code	Item	Scale (bar)
028506	MR63B-1÷0	-1 ÷ 0
028606	MR63B0÷1	0 ÷ 1
028656	MR63B0÷2,5	0 ÷ 2,5
028706	MR63B0÷4	0 ÷ 4
028806	MR63B0÷6	0 ÷ 6
029011	MR63B0÷10	0 ÷ 10
028906	MR63B0÷12	0 ÷ 12

type: **MF40A**

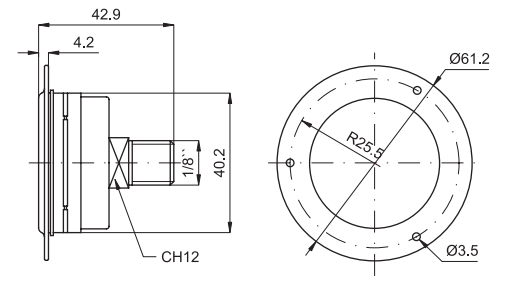

Code	Item	Scale (bar)
028510	MF40A-1÷0	-1 ÷ 0
028610	MF40A0÷1	0 ÷ 1
028663	MF40A0÷2,5	0 ÷ 2,5
028710	MF40A0÷4	0 ÷ 4
028810	MF40A0÷6	0 ÷ 6
029012	MF40A0÷10	0 ÷ 10
028910	MF40A0÷12	0 ÷ 12

type: **MF50A**

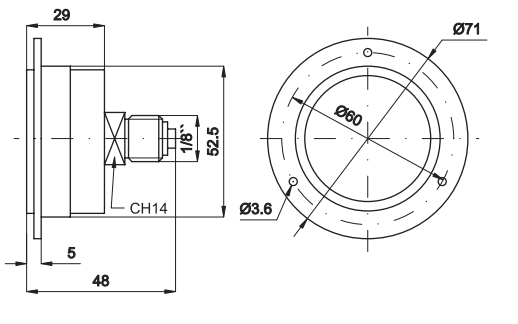

Code	Item	Scale (bar)
029013	MF50A-1÷0	-1 ÷ 0
028611	MF50A0÷1	0 ÷ 1
029014	MF50A0÷2,5	0 ÷ 2,5
028711	MF50A0÷4	0 ÷ 4
028811	MF50A0÷6	0 ÷ 6
028911	MF50A0÷12	0 ÷ 12

type: **MF63B**

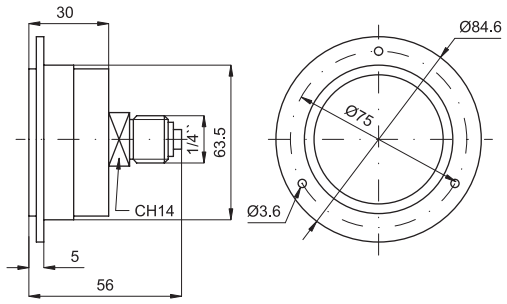

Code	Item	Scale (bar)
028512	MF63B-1÷0	-1 ÷ 0
028612	MF63B0÷1	0 ÷ 1
028662	MF63B0÷2,5	0 ÷ 2,5
028712	MF63B0÷4	0 ÷ 4
028812	MF63B0÷6	0 ÷ 6
028862	MF63B0÷10	0 ÷ 10
028912	MF63B0÷12	0 ÷ 12

type: **MP40A**

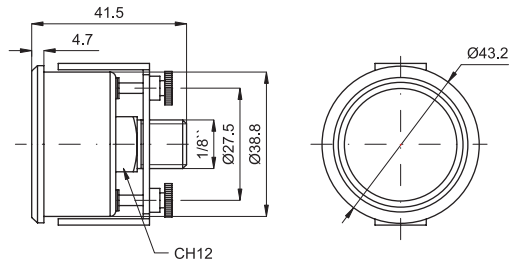

Code	Item	Scale (bar)
028507	MP40A-1÷0	-1 ÷ 0
028607	MP40A0÷1	0 ÷ 1
028713	MP40A0÷2,5	0 ÷ 2,5
028707	MP40A0÷4	0 ÷ 4
028807	MP40A0÷6	0 ÷ 6
029016	MP40A0÷10	0 ÷ 10
028907	MP40A0÷12	0 ÷ 12

type: **MP50A**

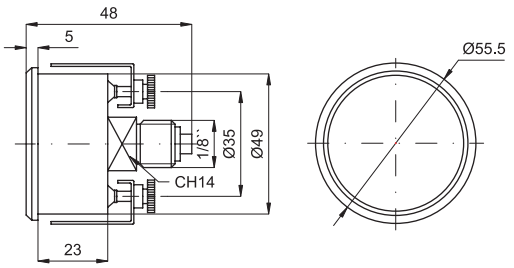

Code	Item	Scale (bar)
028508	MP50A-1÷0	-1 ÷ 0
028608	MP50A0÷1	0 ÷ 1
029017	MP50A0÷2,5	0 ÷ 2,5
028708	MP50A0÷4	0 ÷ 4
028808	MP50A0÷6	0 ÷ 6
029018	MP50A0÷10	0 ÷ 10
028908	MP50A0÷12	0 ÷ 12

type: **MP63A**

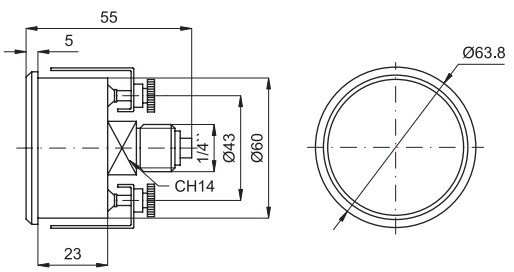

Code	Item	Scale (bar)
028509	MP63B-1÷0	-1 ÷ 0
028609	MP63B0÷1	0 ÷ 1
028613	MP63B0÷2,5	0 ÷ 2,5
028709	MP63B0÷4	0 ÷ 4
028809	MP63B0÷6	0 ÷ 6
028860	MP63B0÷10	0 ÷ 10
028909	MP63B0÷12	0 ÷ 12

Push-in fittings series R



from page 4.2.1

Push-in fittings series R/150 (150 bar)



from page 4.3.1

Push-in fittings series RT



from page 4.5.1

Push-in fittings series RP



from page 4.10.1

Rapid fittings series C



from page 4.20.1

Compression fittings series O



from page 4.25.1

Standard fittings series A



from page 4.35.1

Quick-lock couplings



from page 4.45.1

Multiple connectors

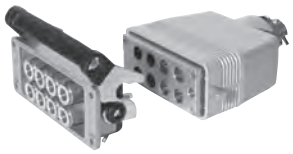

from page 4.55.1

Collectors



from page 4.60.1

Flexible linear tubes

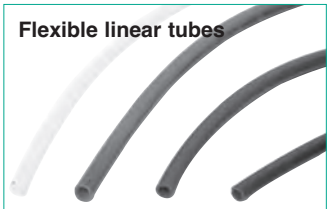

from page 4.65.1

Flexible linear spatter resistant tubes



from page 4.65.11

Tube cutters



from page 4.65.21

Blow guns



from page 4.65.31

Washers



from page 4.65.41

Air-reservoirs



from page 4.70.1

In-line flow restrictors



from page 4.80.1

Flow controls for cylinders



from page 4.80.11

Silenced exhaust restrictors



from page 4.80.50

Fittings with non return valve and circuit selectors



from page 4.83.1

Pressure regulators and adjustable pressure switches



from page 4.83.21

Stop valves



from page 4.83.41

Silencers in acetalic resin



from page 4.85.1

Sintered silencers

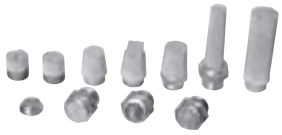

from page 4.85.11

Metal silencers for presses

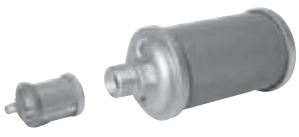

from page 4.85.21

Exhausts conveyor



from page 4.90.1

Notes

Push-in fittings series R

In nickel plated brass

Version	Type
BSPT stud	R11
BSP stud	R12
Female BSP stud	R13
Union	R26
Reducer	R25
BSP stem adapter	R38
Bulkhead	R27
Stem	R39
Plug	R29
BSPT elbow	R14
BSPT swivel elbow	R15
BSP swivel elbow	R41
Female BSP elbow	R17
Extended BSP swivel elbow	R52
BSP elbow hex wrench	R19
Double BSP swivel elbow	R53
Single banjo elbow	R54
Double banjo elbow	R55

Version	Type
Equal elbow	R18
BSPT swivel tee	R42
BSP swivel tee	R43
BSP swivel tee hex wrench	R21
Single banjo tee	R56
Double BSP swivel tee	R57
Double banjo tee	R58
BSPT swivel side tee	R22
BSP swivel side tee	R44
Equal tee	R23
Y piece	R51
Single hollow bolt	R31
Double hollow bolt	R32
Single M/F banjo bolt	R59
Double M/F banjo bolt	R60
Single banjo	R35
Double banjo	R36



Series of push-in fittings with reduced dimensions and new collet and release collar.
They are for connecting nylon and polyurethane tubes.
Available in various configurations (studs, elbows, T, Y) and with threads Gas pre-tefloned taper (BSPT) and Gas parallel (BSP) with sealing o-ring.
The stud threaded versions are standard with external and internal hexagonal key (for mounting in narrow places).

* How to order: R110618V

R11	06	18	V
Type	Tube ø code	Tube or thread code	Option

* For standard items, codes and dimensions see tables from page 4.2.2.

Threads	M3	M5	M6	1/8”	1/4”	3/8”	1/2”	M12x1,25	M12x1,5
Code	M3	M5	M6	18	14	38	12	12x1,25	12x1,5

Options		Suffix
Seals FKM	max 150 °C	V
Special versions on request		/ S

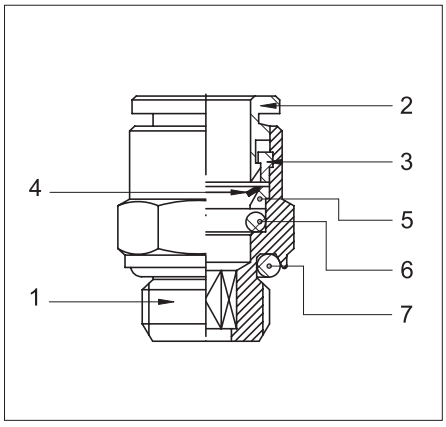

1 = Body
2 = Release collar
3 = Sealing ring
4 = Collet
5 = Protection ring
6 = O-ring
7 = O-ring

Technical data		
Fluid	Compressed air	
Pressure range	0,5 ÷ 12 bar (vacuum resistance: 750 mm. Hg)	
Temperature range	-20 °C ÷ + 70°C	
Parallel threads	UNI - ISO 228/1 (BSP)	
Taper threads	UNI - ISO 7 / 1 (BSPT)	
Metric threads	ISO R / 262	
Connection tubes	Calibrated nylon, polyurethane and rilsan	
Tube tolerances	from ø 3 mm to 10 mm: ± 0,05 mm	ø 12 mm and 14 mm: ± 0,1 mm
Materials	Body and release collar:	Nickel plated brass
	Collet:	Stainless steel
	Seals:	Nitrile rubber (NBR)

Push-in fittings series R

In nickel plated brass

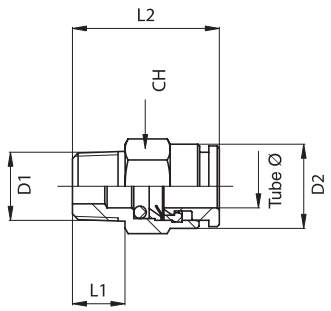

BSPT stud

Code	Item	Tube ø	D_1	D_2	L_1	L_2	CH
020001	R 11 04 18	4	1/8”	9	7,5	15,5	10
020002	R 11 04 14	4	1/4”	9	11	20	14
020005	R 11 06 18	6	1/8”	12	7,5	20,5	12
020006	R 11 06 14	6	1/4”	12	11	20	14
020007	R 11 08 18	8	1/8”	14	7,5	24,5	14
020008	R 11 08 14	8	1/4”	14	11	23	14
020009	R 11 08 38	8	3/8”	14	11,5	22	17
020010	R 11 10 14	10	1/4”	16	11	30	16
020011	R 11 10 38	10	3/8”	16	11,5	23,5	17
020016	R 11 10 12	10	1/2”	16	14	26,5	22
020017	R 11 12 14	12	1/4”	18	11	31,5	18
020012	R 11 12 38	12	3/8”	18	11,5	27	18
020013	R 11 12 12	12	1/2”	18	14	27	22
020014	R 11 14 38	14	3/8”	22	11,5	35	22
020015	R 11 14 12	14	1/2”	22	14	32	22

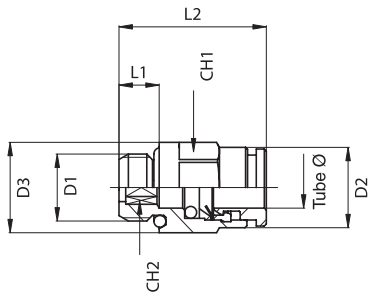

BSP stud

Code	Item	Tube ø	D_1	D_2	D_3	L_1	L_2	CH_1	CH_2
020029	R 12 03 M3	3	M3	6,5	5,5	3	14	-	1,5
020030	R 12 03 M5	3	M5	6,5	8	4	14,5	-	2
020031	R 12 04 M5	4	M5	9	8	4	18,5	-	2,5
020032	R 12 04 M6	4	M6	9	9	4,5	17	-	3
020033	R 12 04 18	4	1/8”	9	13	5	16	9	3
020034	R 12 04 14	4	1/4”	9	16	6,5	18	9	3
020051	R 12 06 M5	6	M5	12	8	4	21,5	-	2,5
020052	R 12 06 M6	6	M6	12	9	4,5	22	-	3
020037	R 12 06 18	6	1/8”	12	13,5	5	19	12	4
020038	R 12 06 14	6	1/4”	12	16	6,5	18,5	12	4
020039	R 12 08 18	8	1/8”	14	13	5	22,5	13	6
020040	R 12 08 14	8	1/4”	14	16	6,5	21	14	6
020041	R 12 08 38	8	3/8”	14	20	7	20,5	14	6
020042	R 12 10 14	10	1/4”	16	16	6,5	27	15	8
020043	R 12 10 38	10	3/8”	16	20	7	24,5	16	8
020053	R 12 10 12	10	1/2”	16	25	8,5	25	16	8
020054	R 12 12 14	12	1/4”	18	16	6,5	28	18	8
020044	R 12 12 38	12	3/8”	18	20	7	28	18	10
020045	R 12 12 12	12	1/2”	18	25	8,5	26	18	10
020046	R 12 14 38	14	3/8”	22	20	7	31	22	10
020047	R 12 14 12	14	1/2”	22	25	8,5	31,5	22	12
020049	R 12 06 12x1,25	6	12x1,25	12	14,5	11	24	13	-
020050	R 12 06 12x1,5	6	12x1,5	12	14,5	11	24	13	-

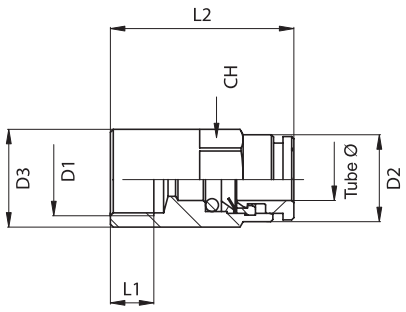

Female BSP stud

Code	Item	Tube ø	D_1	D_2	L_1	L_2	CH
020061	R 13 04 18	4	1/8”	9	7,5	23	9
020064	R 13 06 18	6	1/8”	12	7,5	25,5	12
020065	R 13 06 14	6	1/4”	12	11	29,5	12
020066	R 13 08 18	8	1/8”	14	7,5	26	14
020067	R 13 08 14	8	1/4”	14	11	29,5	14
020068	R 13 10 14	10	1/4”	16	11	31,5	16
020069	R 13 10 38	10	3/8”	16	12	33	16

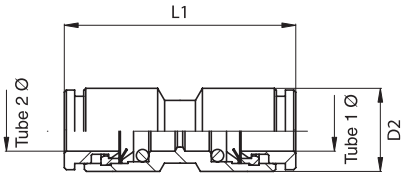

Union

Code	Item	Tube ø 1	Tube ø 2	D_2	L_1
020560	R 26 03 00	3	3	6,5	22
020561	R 26 04 00	4	4	9	27
020563	R 26 06 00	6	6	12	32,5
020568	R 26 06 04	6	4	12	30
020564	R 26 08 00	8	8	14	33
020569	R 26 08 06	8	6	14	33
020565	R 26 10 00	10	10	16	37,5
020570	R 26 10 08	10	8	16	35,5
020566	R 26 12 00	12	12	18	39,5
020567	R 26 14 00	14	14	22	44,5

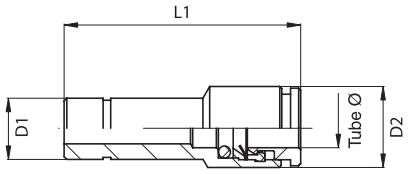

Reducer

Code	Item	Tube ø	D_1	D_2	L_1
020529	R 25 03 04	3	4	6,5	27
020531	R 25 04 06	4	6	9	31
020532	R 25 04 08	4	8	9	31
020533	R 25 04 10	4	10	9	31
020534	R 25 04 12	4	12	9	32
020538	R 25 06 08	6	8	12	33
020539	R 25 06 10	6	10	12	34
020540	R 25 06 12	6	12	12	35
020545	R 25 06 14	6	14	12	37
020541	R 25 08 10	8	10	14	35
020542	R 25 08 12	8	12	14	36
020546	R 25 08 14	8	14	14	38
020543	R 25 10 12	10	12	16	39
020544	R 25 10 14	10	14	16	41
020547	R 25 12 14	12	14	18	41
020548	R 25 06 04	6	4	12	35
020549	R 25 08 06	8	6	14	37

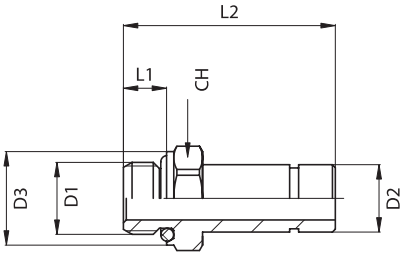

BSP stem adapter

Code	Item	D_1	D_2	D_3	L_1	L_2	CH
020791	R 38 04 M5	M5	4	10	4	24	9
020792	R 38 04 18	1/8”	4	14,5	5	26	13
020793	R 38 04 14	1/4”	4	16	6,5	28,5	16
020805	R 38 06 M5	M5	6	10	4	26	9
020796	R 38 06 18	1/8”	6	14,5	5	28	13
020797	R 38 06 14	1/4”	6	16	6,5	30,5	16
020798	R 38 08 18	1/8”	8	14,5	5	29	13
020799	R 38 08 14	1/4”	8	16	6,5	31,5	16
020800	R 38 10 14	1/4”	10	16	6,5	32,5	16
020801	R 38 10 38	3/8”	10	20	7	33	20
020802	R 38 12 38	3/8”	12	20	7	35	20
020803	R 38 12 12	1/2”	12	25	8,5	37	26

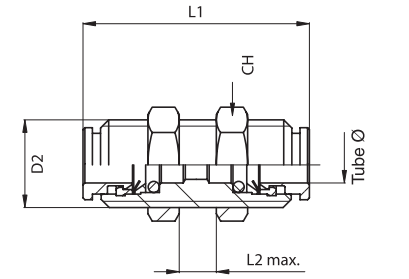

Bulkhead

Code	Item	Tube ø	D_2	L_1	L_2 max	CH
020580	R 27 03 03	3	10x1	22	8	14
020581	R 27 04 04	4	12x1	27	11	16
020583	R 27 06 06	6	14x1	32,5	16	18
020584	R 27 08 08	8	16x1	33	17	20
020585	R 27 10 10	10	18x1	37,5	19	22
020586	R 27 12 12	12	20x1	39,5	20	24

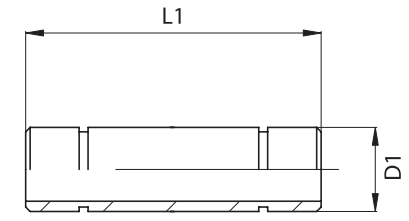

Stem

Code	Item	D_1	L_1
020831	R 39 00 04	4	30
020833	R 39 00 06	6	35
020834	R 39 00 08	8	35
020835	R 39 00 10	10	40
020836	R 39 00 12	12	42
020837	R 39 00 14	14	46

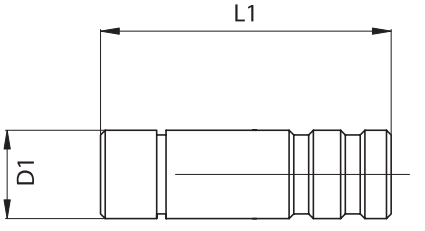

Plug

Code	Item	D_1	L_1
020630	R 29 00 03	3	20
020631	R 29 00 04	4	25
020633	R 29 00 06	6	30
020634	R 29 00 08	8	30
020635	R 29 00 10	10	35
020636	R 29 00 12	12	38
020637	R 29 00 14	14	40

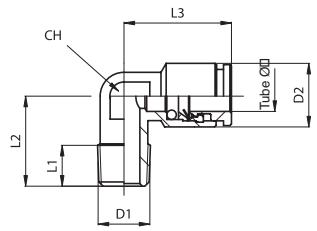

BSPT elbow

Code	Item	Tube ø	D_1	D_2	L_1	L_2	L_3	CH
020091	R 14 04 18	4	1/8”	9	7,5	15	17	9
020101	R 14 04 14	4	1/4”	9	11	18,5	17	9
020094	R 14 06 18	6	1/8”	12	7,5	15	20	10
020095	R 14 06 14	6	1/4”	12	11	18,5	20	10
020096	R 14 08 18	8	1/8”	14	7,5	19	20,5	12
020097	R 14 08 14	8	1/4”	14	11	21	20,5	12
020098	R 14 10 14	10	1/4”	16	11	22	24	14
020099	R 14 10 38	10	3/8”	16	11,5	22,5	24	14

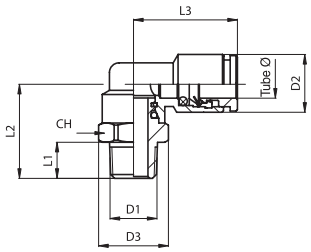

BSPT swivel elbow

Code	Item	Tube ø	D_1	D_2	D_3	L_1	L_2	L_3	CH
020131	R 15 04 18	4	1/8”	9	14,5	7,5	19,5	19	13
020132	R 15 04 14	4	1/4”	9	15,5	11	23	19	14
020135	R 15 06 18	6	1/8”	12	14,5	7,5	19,5	21,5	13
020136	R 15 06 14	6	1/4”	12	15,5	11	23	21,5	14
020137	R 15 08 18	8	1/8”	14	14,5	7,5	19,5	22	13
020138	R 15 08 14	8	1/4”	14	15,5	11	23	22	14
020139	R 15 08 38	8	3/8”	14	20	11,5	26	23	18
020140	R 15 10 14	10	1/4”	16	20	11	25,5	25	18
020141	R 15 10 38	10	3/8”	16	20	11,5	26	25	18
020142	R 15 12 38	12	3/8”	18	22,5	11,5	29,5	28	20
020143	R 15 12 12	12	1/2”	18	24,5	14	33	28	22
020144	R 15 14 38	14	3/8”	22	22,5	11,5	29,5	30,5	20
020145	R 15 14 12	14	1/2”	22	24,5	14	33	30,5	22

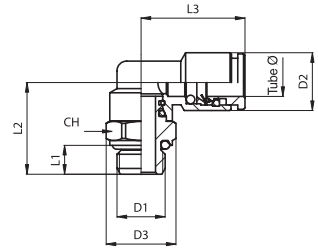

BSP swivel elbow

Code	Item	Tube ø	D_1	D_2	D_3	L_1	L_2	L_3	CH
020191	R 41 04 M5	4	M5	9	10	4	14	17	9
020210	R 41 04 M6	4	M6	9	10	4,5	14,5	17	9
020192	R 41 04 18	4	1/8”	9	14,5	5	18	19	13
020193	R 41 04 14	4	1/4”	9	16	6,5	22,5	19	13
020211	R 41 06 M5	6	M5	12	10	4	14	20	9
020212	R 41 06 M6	6	M6	12	10	4,5	14,5	20	9
020196	R 41 06 18	6	1/8”	12	14,5	5	18	21,5	13
020197	R 41 06 14	6	1/4”	12	16	6,5	22,5	21,5	13
020198	R 41 08 18	8	1/8”	14	13	5	22,5	13	6
020199	R 41 08 14	8	1/4”	14	16	6,5	22,5	22	13
020200	R 41 08 38	8	3/8”	14	20	7	25,5	23	16
020201	R 41 10 14	10	1/4”	16	16	6,5	22	25	16
020202	R 41 10 38	10	3/8”	16	20	7	25,5	25	16
020213	R 41 10 12	10	1/2”	16	25	8,5	27,5	25	16
020214	R 41 12 14	12	1/4”	18	16	6,5	25,5	28	20
020203	R 41 12 38	12	3/8”	18	20	7	26	28	20
020204	R 41 12 12	12	1/2”	18	25	8,5	30,5	28	20
020205	R 41 14 38	14	3/8”	22	20	7	26	30,5	20
020206	R 41 14 12	14	1/2”	22	25	8,5	30,5	30,5	20
020208	R 41 06 12x1,25	6	12x1,25	12	14,5	11	23	21,5	13
020209	R 41 06 12x1,5	6	12x1,5	12	14,5	11	23	21,5	13

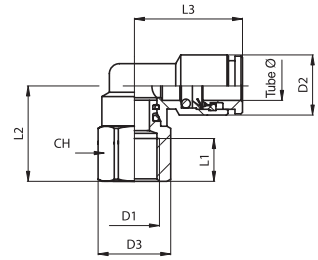

Female BSP elbow

Code	Item	Tube ø	D_1	D_2	D_3	L_1	L_2	L_3	CH
020251	R 17 04 18	4	1/8”	9	14,5	7,5	17,5	19	13
020254	R 17 06 18	6	1/8”	12	14,5	7,5	17,5	21,5	13
020255	R 17 06 14	6	1/4”	12	18	11	21,5	21,5	16
020256	R 17 08 18	8	1/8”	14	14,5	7,5	17,5	22	13
020257	R 17 08 14	8	1/4”	14	18	11	21,5	22	16
020258	R 17 10 14	10	1/4”	16	18	11	23	25	16
020259	R 17 10 38	10	3/8”	16	22,5	12	25	25	20

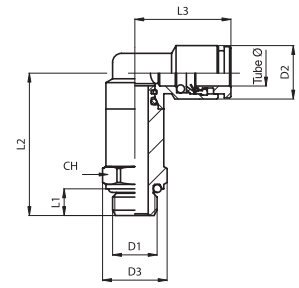

Extended BSP swivel elbow

Code	Item	Tube ø	D_1	D_2	D_3	L_1	L_2	L_3	CH
020271	R 52 04 18	4	1/8”	9	14,5	5	29	19	13
020274	R 52 06 18	6	1/8”	12	14,5	5	32	21,5	13
020275	R 52 06 14	6	1/4”	12	18	6,5	36,5	21,5	16
020276	R 52 08 18	8	1/8”	14	14,5	5	34	22	13
020277	R 52 08 14	8	1/4”	14	18	6,5	38,5	22	16

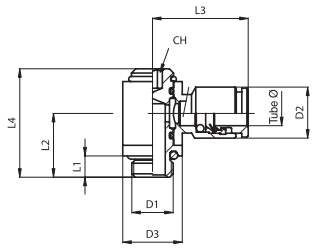

BSP elbow hex wrench

Code	Item	Tube ø	D_1	D_2	D_3	L_1	L_2	L_3	L_4	CH
020159	R 19 03 M3	3	M3	6,5	8	3	8,5	14	14	2
020160	R 19 03 M5	3	M5	6,5	8	4	9,5	14	15	2
020161	R 19 04 M5	4	M5	9	10	4	11	18	19	3
020162	R 19 04 18	4	1/8”	9	14	5	15	19,5	25,5	4
020176	R 19 06 M5	6	M5	12	10	4	11	20,5	19	3
020166	R 19 06 18	6	1/8”	12	14	5	15	22	25,5	4
020167	R 19 06 14	6	1/4”	12	18	6,5	17,5	23,5	29	5
020168	R 19 08 18	8	1/8”	14	14	5	15	22,5	25,5	4
020169	R 19 08 14	8	1/4”	14	18	6,5	17,5	24	29	5
020170	R 19 10 14	10	1/4”	16	19	6,5	17,5	26,5	29	5
020171	R 19 10 38	10	3/8”	16	22	7	20	28	33	6
020172	R 19 12 38	12	3/8”	18	22	7	20	29	33	6
020173	R 19 12 12	12	1/2”	18	27	8,5	24	31	39,5	8

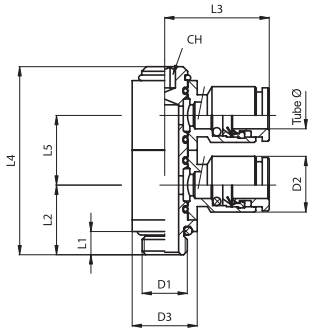

Double BSP swivel elbow

Code	Item	Tube ø	D_1	D_2	D_3	L_1	L_2	L_3	L_4	L_5	CH
020181	R 53 04 M5	4	M5	9	10	4	11	18	29	10	3
020182	R 53 04 18	4	1/8”	9	14	5	15	19,5	40,5	15	4
020183	R 53 06 M5	6	M5	12	10	4	11	20,5	29	10	3
020184	R 53 06 18	6	1/8”	12	14	5	15	22	40,5	15	4
020185	R 53 06 14	6	1/4”	12	18	6,5	17,5	23,5	46	17	5
020186	R 53 08 18	8	1/8”	14	14	5	15	22,5	40,5	15	4
020187	R 53 08 14	8	1/4”	14	18	6,5	17,5	24	46	17	5

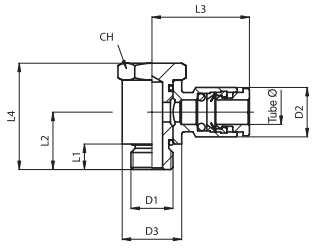

Single banjo elbow

Code	Item	Tube ø	D_1	D_2	D_3	L_1	L_2	L_3	L_4	CH
020221	R 54 04 M5	4	M5	9	10	4	9	18	17	8
020222	R 54 04 18	4	1/8”	9	14	5	12,5	19,5	24	14
020223	R 54 06 M5	6	M5	12	10	4	9	20,5	17	8
020224	R 54 06 18	6	1/8”	12	14	5	12,5	22	24	14
020225	R 54 06 14	6	1/4”	12	18	6,5	15	23,5	28,5	17
020226	R 54 08 18	8	1/8”	14	14	5	12,5	22,5	24	14
020227	R 54 08 14	8	1/4”	14	18	6,5	15	24	28,5	17

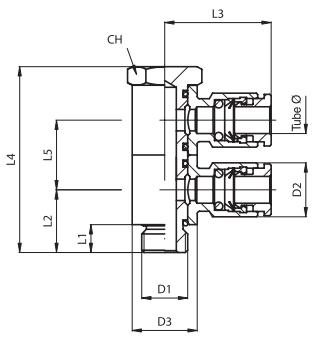

Double banjo elbow

Code	Item	Tube ø	D_1	D_2	D_3	L_1	L_2	L_3	L_4	L_5	CH
020302	R 55 04 18	4	1/8”	9	14	5	12,5	19,5	39	15	14
020304	R 55 06 18	6	1/8”	12	14	5	12,5	22	39	15	14
020305	R 55 06 14	6	1/4”	12	18	6,5	15	23,5	45,5	17	17
020306	R 55 08 18	8	1/8”	14	14	5	12,5	22,5	39	15	14
020307	R 55 08 14	8	1/4”	14	18	6,5	15	24	45,5	17	17

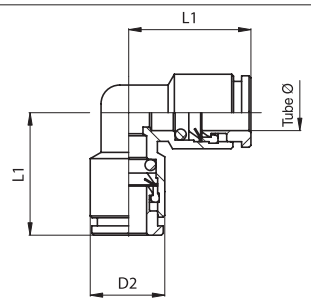

Equal elbow

Code	Item	Tube ø	D_2	L_1
020280	R 18 03 03	3	7	13
020281	R 18 04 04	4	9	16,5
020283	R 18 06 06	6	12	19,5
020284	R 18 08 08	8	14	20,5
020285	R 18 10 10	10	16	24
020286	R 18 12 12	12	18	26
020287	R 18 14 14	14	22	30

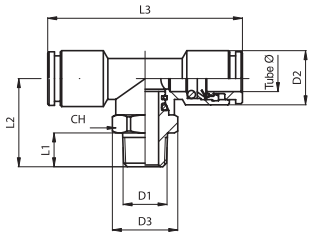

BSPT swivel tee

Code	Item	Tube ø	D_1	D_2	D_3	L_1	L_2	L_3	CH
020341	R 42 04 18	4	1/8”	9	14,5	7,5	19,5	38	13
020353	R 42 04 14	4	1/4”	9	15,5	11	23	38	14
020344	R 42 06 18	6	1/8”	12	14,5	7,5	19,5	43	13
020345	R 42 06 14	6	1/4”	12	15,5	11	23	43	14
020346	R 42 08 18	8	1/8”	14	14,5	7,5	19,5	44	13
020347	R 42 08 14	8	1/4”	14	15,5	11	23	44	14
020352	R 42 08 38	8	3/8”	14	20	11,5	26	46	18
020348	R 42 10 14	10	1/4”	16	20	11	25,5	50	18
020349	R 42 10 38	10	3/8”	16	20	11,5	26	50	18
020350	R 42 12 38	12	3/8”	18	22,5	11,5	29,5	56	20
020351	R 42 12 12	12	1/2”	18	24,5	14	33	56	22

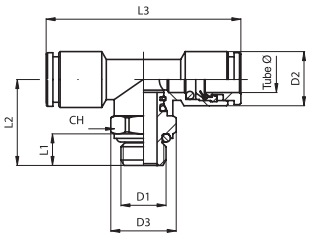

BSP swivel tee

Code	Item	Tube ø	D_1	D_2	D_3	L_1	L_2	L_3	CH
020371	R 43 04 18	4	1/8”	9	14,5	5	18	38	13
020372	R 43 04 14	4	1/4”	9	16	6,5	22,5	38	13
020375	R 43 06 18	6	1/8”	12	14,5	5	18	43	13
020376	R 43 06 14	6	1/4”	12	16	6,5	22,5	43	13
020377	R 43 08 18	8	1/8”	14	14,5	5	18	44	13
020378	R 43 08 14	8	1/4”	14	16	6,5	22,5	44	13
020379	R 43 08 38	8	3/8”	14	20	7	25,5	46	16
020380	R 43 10 14	10	1/4”	16	16	6,5	22	50	16
020381	R 43 10 38	10	3/8”	16	20	7	25,5	50	16
020382	R 43 12 38	12	3/8”	18	25	7	26	56	20
020383	R 43 12 12	12	1/2”	18	25	8,5	30,5	56	20

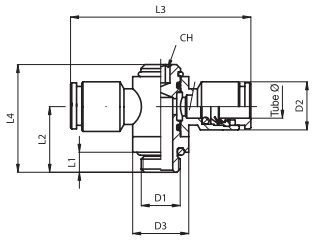

BSP swivel tee hex wrench

Code	Item	Tube ø	D_1	D_2	D_3	L_1	L_2	L_3	L_4	CH
020399	R 21 03 M3	3	M3	6,5	8	3	8,5	28	14	2
020400	R 21 03 M5	3	M5	6,5	8	4	9,5	28	15	2
020401	R 21 04 M5	4	M5	9	10	4	11	36	19	3
020402	R 21 04 18	4	1/8”	9	14	5	15	39	25,5	4
020416	R 21 06 M5	6	M5	12	10	4	11	41	19	3
020406	R 21 06 18	6	1/8”	12	14	5	15	44	25,5	4
020407	R 21 06 14	6	1/4”	12	18	6,5	17,5	47	29	5
020408	R 21 08 18	8	1/8”	14	14	5	15	45	25,5	4
020409	R 21 08 14	8	1/4”	14	18	6,5	17,5	48	29	5
020410	R 21 10 14	10	1/4”	16	19	6,5	17,5	53	29	5
020411	R 21 10 38	10	3/8”	16	22	7	20	56	33	6
020412	R 21 12 38	12	3/8”	18	22	7	20	58	33	6
020413	R 21 12 12	12	1/2”	18	27	8,5	24	62	39,5	8

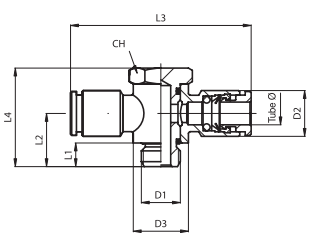

Single banjo tee

Code	Item	Tube ø	D_1	D_2	D_3	L_1	L_2	L_3	L_4	CH
020421	R 56 04 M5	4	M5	9	10	4	9	36	17	8
020422	R 56 04 18	4	1/8”	9	14	5	12,5	39	24	14
020423	R 56 06 M5	6	M5	12	10	4	9	41	17	8
020424	R 56 06 18	6	1/8”	12	14	5	12,5	44	24	14
020425	R 56 06 14	6	1/4”	12	18	6,5	15	47	28,5	17
020426	R 56 08 18	8	1/8”	14	14	5	12,5	45	24	14
020427	R 56 08 14	8	1/4”	14	18	6,5	15	48	28,5	17

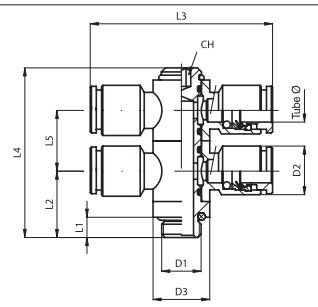

Double BSP swivel tee

Code	Item	Tube ø	D_1	D_2	D_3	L_1	L_2	L_3	L_4	L_5	CH
020451	R 57 04 M5	4	M5	9	10	4	11	36	29	10	3
020452	R 57 04 18	4	1/8”	9	14	5	15	39	40,5	15	4
020453	R 57 06 M5	6	M5	12	10	4	11	41	29	10	3
020454	R 57 06 18	6	1/8”	12	14	5	15	44	40,5	15	4
020455	R 57 06 14	6	1/4”	12	18	6,5	17,5	47	46	17	5
020456	R 57 08 18	8	1/8”	14	14	5	15	45	40,5	15	4
020457	R 57 08 14	8	1/4”	14	18	6,5	17,5	48	46	17	5

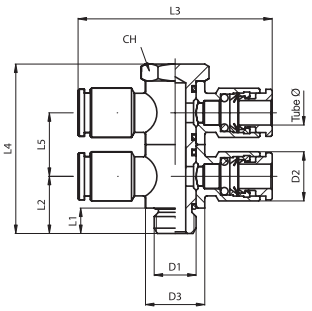

Double banjo tee

Code	Item	Tube ø	D_1	D_2	D_3	L_1	L_2	L_3	L_4	L_5	CH
020481	R 58 04 M5	4	M5	9	10	4	9	36	27	10	8
020482	R 58 04 18	4	1/8”	9	14	5	12,5	39	39	15	14
020483	R 58 06 M5	6	M5	12	10	4	9	41	27	10	8
020484	R 58 06 18	6	1/8”	12	14	5	12,5	44	39	15	14
020485	R 58 06 14	6	1/4”	12	18	6,5	15	47	45,5	17	17
020486	R 58 08 18	8	1/8”	14	14	5	12,5	45	39	15	14
020487	R 58 08 14	8	1/4”	14	18	6,5	15	48	45,5	17	17

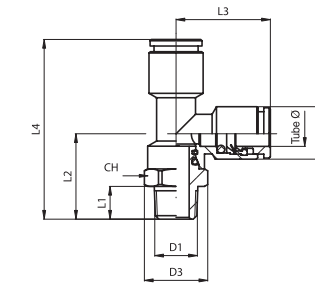

BSPT swivel side tee

Code	Item	Tube ø	D_1	D_2	D_3	L_1	L_2	L_3	L_4	CH
020431	R 22 04 18	4	1/8”	9	14,5	7,5	19,5	19	38,5	13
020430	R 22 04 14	4	1/4”	9	15,5	11	23	19	42	14
020434	R 22 06 18	6	1/8”	12	14,5	7,5	19,5	21,5	41	13
020435	R 22 06 14	6	1/4”	12	15,5	11	23	21,5	44,5	14
020436	R 22 08 18	8	1/8”	14	14,5	7,5	19,5	22	41,5	13
020437	R 22 08 14	8	1/4”	14	15,5	11	23	22	45	14
020438	R 22 10 14	10	1/4”	16	20	11	25,5	25	50,5	18
020439	R 22 10 38	10	3/8”	16	20	11,5	26	25	51	18
020440	R 22 12 38	12	3/8”	18	22,5	11,5	29,5	28	57,5	20
020441	R 22 12 12	12	1/2”	18	24,5	14	33	28	61	22

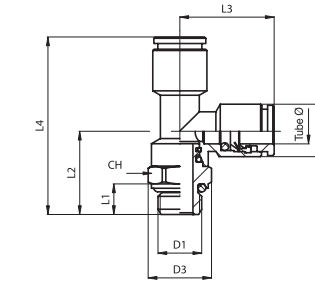

BSP swivel side tee

Code	Item	Tube ø	D_1	D_2	D_3	L_1	L_2	L_3	L_4	CH
020461	R 44 04 18	4	1/8”	9	14,5	5	18	19	37	13
020462	R 44 04 14	4	1/4”	9	16	6,5	22,5	19	41,5	13
020474	R 44 06 M5	6	M5	12	10	4	14	20	34	9
020465	R 44 06 18	6	1/8”	12	14,5	5	18	21,5	39,5	13
020466	R 44 06 14	6	1/4”	12	16	6,5	22,5	21,5	44	13
020467	R 44 08 18	8	1/8”	14	14,5	5	18	22	40	13
020468	R 44 08 14	8	1/4”	14	16	6,5	22,5	22	44,5	13
020470	R 44 10 14	10	1/4”	16	16	6,5	22	25	47	16
020471	R 44 10 38	10	3/8”	16	20	7	25,5	25	50,5	16
020472	R 44 12 38	12	3/8”	18	20	7	26	28	54	20
020473	R 44 12 12	12	1/2”	18	25	8,5	30,5	28	58,5	20

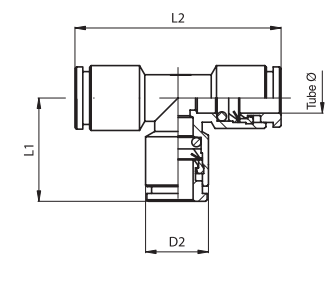

Equal tee

Code	Item	Tube ø	D_2	L_1	L_2
020490	R 23 03 03	3	7	13	26
020491	R 23 04 04	4	9	16,5	33
020493	R 23 06 06	6	12	19,5	39
020494	R 23 08 08	8	14	20,5	41
020495	R 23 10 10	10	16	24	48
020496	R 23 12 12	12	18	26	52
020497	R 23 14 14	14	22	30	60

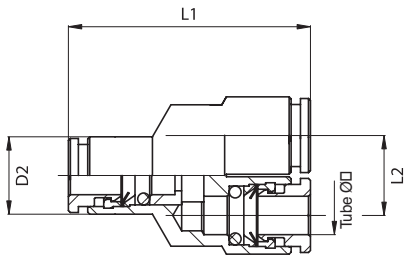

Y piece

Code	Item	Tube ø	D_2	L_1	L_2
020887	R 51 03 03	3	7	22	7
020888	R 51 04 04	4	9	28,5	9,5
020889	R 51 06 06	6	12	35	12,
020890	R 51 08 08	8	14	36,5	14,5

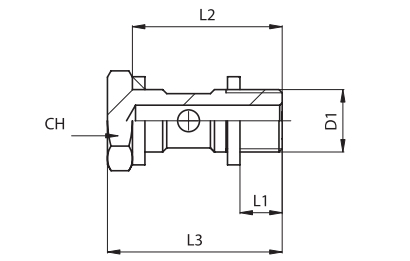

Single hollow bolt

Code	Item	D_1	L_1	L_2	L_3	CH
020671	R 31 00 M5	M5	4	16	19	8
020672	R 31 00 18	1/8”	5	23	27	14
020673	R 31 00 14	1/4”	6,5	26,5	31,5	17
020674	R 31 00 38	3/8”	7	30	36	20
020675	R 31 00 12	1/2”	15	37	43	26

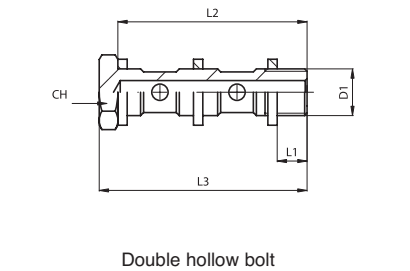

Double hollow bolt

Code	Item	D_1	L_1	L_2	L_3	CH
020691	R 32 00 18	1/8”	5	39,5	42,5	14
020692	R 32 00 14	1/4”	6,5	45	50	17
020693	R 32 00 38	3/8”	7	51,5	57,5	20
020694	R 32 00 12	1/2”	8,5	61	67	26

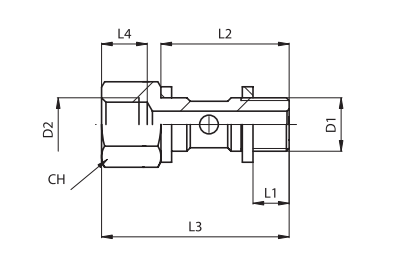

Single M/F banjo bolt

Code	Item	D_1	D_2	L_1	L_2	L_3	L_4	CH
020701	R 59 00 18	1/8”	1/8”	5	23	35	8	14
020702	R 59 00 14	1/4”	1/4”	6,5	26,5	40,5	10	17
020703	R 59 00 38	3/8”	3/8”	7	30	45	11	20

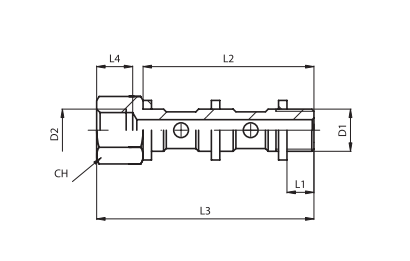

Double M/F banjo bolt

Code	Item	D_1	D_2	L_1	L_2	L_3	L_4	CH
020705	R 60 00 18	1/8”	1/8”	5	39,5	51,5	8	14
020706	R 60 00 14	1/4”	1/4”	6,5	45	59	10	17
020707	R 60 00 38	3/8”	3/8”	7	51,5	66,5	11	20

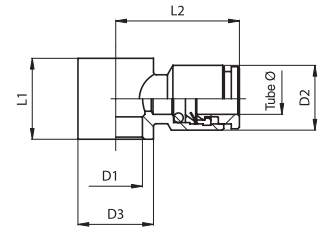

Single banjo

Code	Item	Tube ø	D_1	D_2	D_3	L_1	L_2
020732	R 35 04 M5	4	M5	9	10	10	18
020733	R 35 04 18	4	1/8”	9	14	15	19,5
020736	R 35 06 18	6	1/8”	12	14	15	22
020737	R 35 06 14	6	1/4”	12	18	17	23,5
020738	R 35 08 18	8	1/8”	14	14	15	22,5
020739	R 35 08 14	8	1/4”	14	18	17	24
020740	R 35 08 38	8	3/8”	14	22	20	26
020741	R 35 10 14	10	1/4”	16	18	17	26,5
020742	R 35 10 38	10	3/8”	16	22	20	28
020743	R 35 12 38	12	3/8	18	22	20	29
020744	R 35 12 12	12	1/2”	18	27	24	31

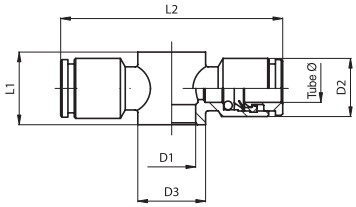

Double banjo

Code	Item	Tube ø	D_1	D_2	D_3	L_1	L_2
020761	R 36 04 M5	4	M5	9	10	10	36
020762	R 36 04 18	4	1/8”	9	14	15	39
020765	R 36 06 18	6	1/8”	12	14	15	44
020766	R 36 06 14	6	1/4”	12	18	17	47
020767	R 36 08 18	8	1/8”	14	14	15	45
020768	R 36 08 14	8	1/4”	14	18	17	48
020773	R 36 08 38	8	3/8”	14	22	20	52
020769	R 36 10 14	10	1/4”	16	18	17	53
020770	R 36 10 38	10	3/8”	16	22	20	56
020771	R 36 12 38	12	3/8	18	22	20	58
020772	R 36 12 12	12	1/2”	18	27	24	62

Notes

Push-in fittings series R/150 (150 bar)

In nickel plated brass

Version	Type
BSPT stud	R11/150
BSPT elbow	R14/150
BSPT swivel elbow	R15/150



Series of push-in fittings for specific use in the lubrication field: they can be used up to a maximum pressure of 150 bar.

How to order: R110618/150

R11	06	18	/150
Type	Tube ø code	Thread code	Maximum pressure

For standard items, codes and dimensions see tables from page 4.3.2

External tube (mm)	4	5
Code	04	06

Threads	M6x1	M8x1	M10x1	1/8”	1/4”
Code	M6x1	M8x1	M10x1	18	14

4

Technical data	
Fluid	Compressed air
Pressure	max 150 bar
Temperature range	-20 °C ÷ + 70°C
Taper threads	UNI - ISO 7 / 1 (BSPT)
Metric threads	ISO R / 262
Connection tubes	Nylon 6-6 (for Ø 4 = 4x1,5, for Ø 6 = 6x3)
Tube tolerances	± 0,05 mm
Materials	Body and release collar: Nickel plated brass Metal thread: Nickel plated brass Collet: Brass Seals: NBR

Push-in fittings series R/150 (150 bar)

In nickel plated brass

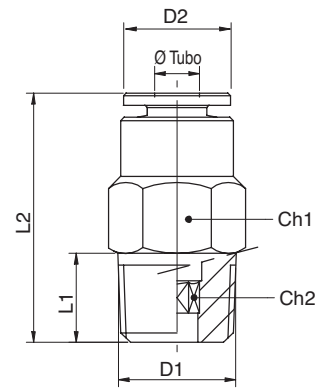

BSPT stud

Code	Item	Tube ø	D_1	D_2	L_1	L_2	CH_1	CH_2
020021	R 11 04 18 / 150	4	R1/8	9,5	7,5	27	10	3
020019	R 11 04 M6x1 / 150	4	M6x1	9,5	8	25	10	2,5
020024	R 11 04 M8x1 / 150	4	M8x1	9,5	8	22,5	10	3
020025	R 11 04 M10x1 / 150	4	M10x1	9,5	8	21	11	3
020026	R 11 06 18 / 150	6	R1/8	11,5	7,5	24	12	4
020119	R 11 06 14 / 150	6	R1/4	11,5	11	26	14	4
020028	R 11 06 M6x1 / 150	6	M6x1	11,5	8	28	12	2,5
020018	R 11 06 M8x1 / 150	6	M8x1	11,5	8	28	12	4
020080	R 11 06 M10x1 / 150	6	M10x1	11,5	8	24,5	12	4

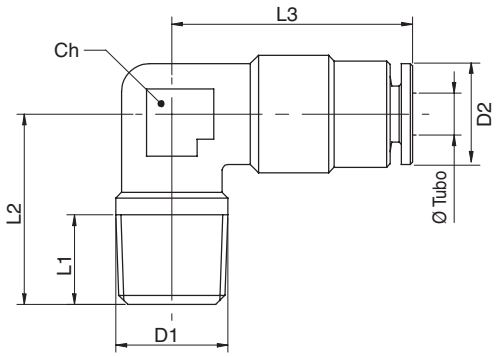

BSPT elbow

Code	Item	Tube ø	D_1	D_2	L_1	L_2	CH_1	CH_2
020020	R 14 04 18 / 150	4	R1/8	9,5	7,5	17	21,5	10
020022	R 14 04 M6x1 / 150	4	M6x1	9,5	6	17	21,5	10
020055	R 14 04 M8x1 / 150	4	M8x1	9,5	8	17	21,5	10
020056	R 14 04 M10x1 / 150	4	M10x1	9,5	8	18	21,5	10
020057	R 14 06 18 / 150	6	R1/8	11,5	7,5	20	24	14
020058	R 14 06 M6x1 / 150	6	M6x1	11,5	6	20	24	14
020059	R 14 06 M8x1 / 150	6	M8x1	11,5	8	20	24	14
020060	R 14 06 M10x1 / 150	6	M10x1	11,5	8	21	24	14

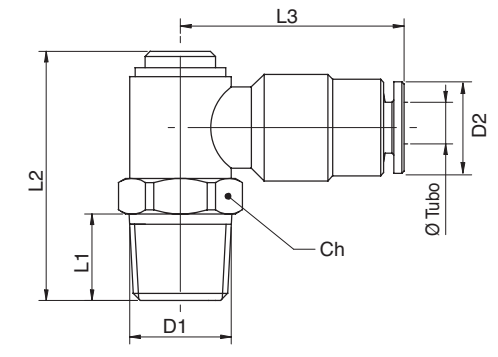

BSPT swivel elbow

Code	Item	Tube ø	D_1	D_2	L_1	L_2	CH_1	CH_2
020070	R 15 04 18 / 150	4	R1/8	9,5	7,5	24,5	22	11
020072	R 15 04 M6x1 / 150	4	M6x1	9,5	8	24	22	11
020089	R 15 04 M8x1 / 150	4	M8x1	9,5	8	24	22	11
020074	R 15 04 M10x1 / 150	4	M10x1	9,5	8	25	22	11
020075	R 15 06 18 / 150	6	R1/8	11,5	7,5	24,5	24	11
020120	R 15 06 14 / 150	6	R1/4	11,5	11	28	24	14
020077	R 15 06 M6x1 / 150	6	M6x1	11,5	8	24	24	11
020078	R 15 06 M8x1 / 150	6	M8x1	11,5	8	24	24	11
020079	R 15 06 M10x1 / 150	6	M10x1	11,5	8	25	24	11

Push-in fittings series RT
In DELRIN

Version	Type
BSP stud	RT12
Union	RT25
BSP stem adapter	RT13
Reducer	RT26
Stem increaser	RT27
Stem	RT32
Plug	RT33
BSPT swivel elbow	RT16
Extended BSPT swivel elbow	RT17
BSP swivel elbow	RT18
Extended BSP swivel elbow	RT19
BSP elbow hex wrench	RT20

Version	Type
Single banjo elbow	RT37
Equal elbow	RT14
BSPT swivel tee	RT21
BSP swivel tee	RT22
BSPT swivel side tee	RT23
BSP swivel side tee	RT24
Equal tee	RT15
Y piece	RT29
Stem Y	RT30
BSP swivel Y	RT31
Single hollow bolt	RT36
Single banjo	RT28
Stem cartridge	RT34



Series of push-in fittings with reduced dimensions and new collet and release collar.
They are for connecting nylon and polyurethane tubes.
Available in various configurations (studs, elbows, T, Y) and with threads Gas pre-tefloned taper (BSPT) and Gas parallel (BSP) with sealing o-ring.
The stud threaded versions are standard with external and internal hexagonal key (for mounting in narrow places).

* How to order: RT120618V

RT12	06	18	V
Type	Tube ø code	Tube or thread code	Option

* For standard items, codes and dimensions see tables from page 4.5.2.

External tube (mm)	3	4	5	6	8	10
Code	03	04	05	06	08	10

Threads	M5	1/8”	1/4”	3/8”
Code	M5	18	14	38

Options		Suffix
Seals FKM	max 150 °C	V
Special versions on request		/ S

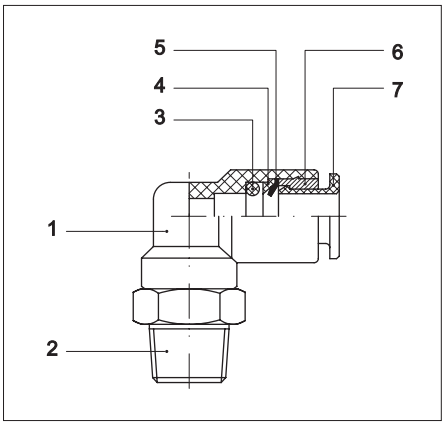

1 = Body
2 = Metal thread
3 = O-ring
4 = Protection ring
5 = Collet
6 = Cartridge
7 = Release collar

Technical data		
Fluid	Compressed air	
Pressure range	0,5 ÷ 12 bar (vacuum resistance: 750 mm. Hg)	
Temperature range	-20 °C ÷ + 70°C	
Parallel threads	UNI - ISO 228 / 1 (BSP)	
Taper threads	UNI - ISO 7 / 1 (BSPT)	
Metric threads	ISO R / 262	
Connection tubes	Calibrated nylon, polyurethane and rilsan	
Tube tolerances	± 0,05 mm	
Materials	Body and release collar:	Acetal resin (Delrin)
	Metal thread:	Nickel plated brass
	Collet:	Stainless steel
	Seals:	Nitrile rubber (NBR)

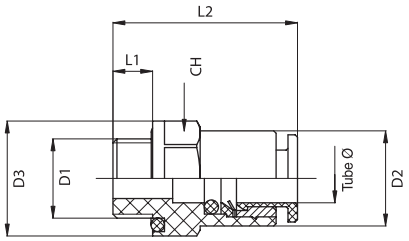

BSP stud
Body completely in acetal resin

Code	Item	Tube ø	D_1	D_2	D_3	L_1	L_2	CH	Weight (g)
029101	RT 12 04 18	4	1/8”	9,7	15,5	6	20	14	2
029102	RT 12 06 18	6	1/8”	12	15,5	6	23	14	3
029103	RT 12 06 14	6	1/4”	12	18,5	8	25	17	5
029104	RT 12 08 18	8	1/8”	14	15,5	6	24,5	14	4
029105	RT 12 08 14	8	1/4”	14	18,5	8	24	17	6
029106	RT 12 08 38	8	3/8”	14	23,5	9	26	21	8
029107	RT 12 10 14	10	1/4”	16,5	18,5	8	27,5	17	6
029108	RT 12 10 38	10	3/8”	16,5	23,5	9	27,5	21	8

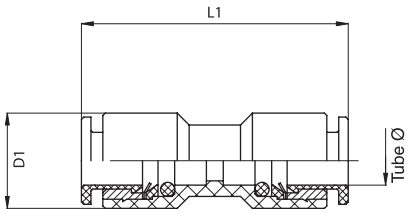

Union

Code	Item	Tube ø	D_1	L_1	Weight (g)
029341	RT 25 04 04	4	9,7	25,5	2
029342	RT 25 06 06	6	12	32	4
029345	RT 25 06 04	6-4	12	30	4
029343	RT 25 08 08	8	14	33,5	6
029346	RT 25 08 06	8-6	14	33	6
029344	RT 25 10 10	10	16,5	37,5	8
029347	RT 25 10 08	10-8	16,5	36,5	8

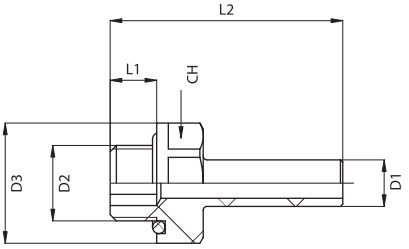

BSP stem adapter
Body completely in acetal resin

Code	Item	D_1	D_2	D_3	L_1	L_2	CH	Weight (g)
029121	RT 13 04 18	4	1/8”	15,5	6	27	14	2
029122	RT 13 06 18	6	1/8”	15,5	6	30	14	2
029123	RT 13 06 14	6	1/4”	18,5	8	33,5	17	3
029124	RT 13 08 18	8	1/8”	15,5	6	32	14	2
029125	RT 13 08 14	8	1/4”	18,5	8	35,5	17	3
029126	RT 13 08 38	8	3/8”	23,5	9	37	21	6
029127	RT 13 10 14	10	1/4”	18,5	8	37,5	17	4
029128	RT 13 10 38	10	3/8”	23,5	9	39	21	5

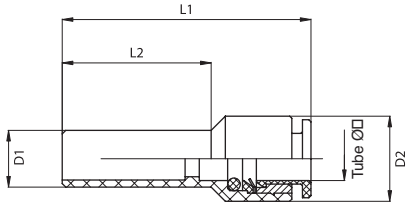

Reducer

Code	Item	Tube ø	D_1	D_2	L_1	L_2	Weight (g)
029351	RT 26 04 06	4	6	10	31	18	1
029352	RT 26 04 08	4	8	10	32	20	2
029353	RT 26 04 10	4	10	10	37	22	3
029354	RT 26 06 08	6	8	12	36	20	3
029355	RT 26 06 10	6	10	12	36	22	3
029356	RT 26 06 12	6	12	12	40	25	4
029357	RT 26 08 10	8	10	14	38,5	22	5
029358	RT 26 08 12	8	12	14	39,5	25	-
029359	RT 26 10 12	10	12	16,5	44	25	-

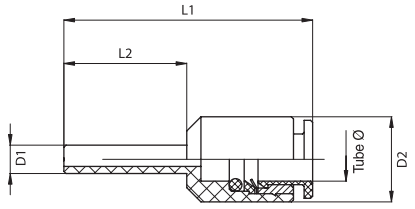

Stem increaser

Code	Item	Tube ø	D_1	D_2	L_1	L_2	Weight (g)
029371	RT 27 06 04	6	4	12	33	16	3
029372	RT 27 08 06	8	6	14	33,5	18	4

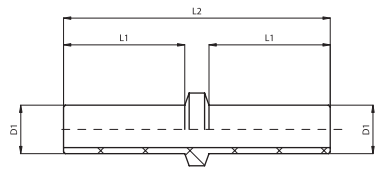

Stem

Code	Item	D_1	L_1	L_2	Weight (g)
029431	RT 32 04 04	4	15	33	1
029432	RT 32 06 06	6	18	40	1
029433	RT 32 08 08	8	20	45	2
029434	RT 32 10 10	10	22	48	3

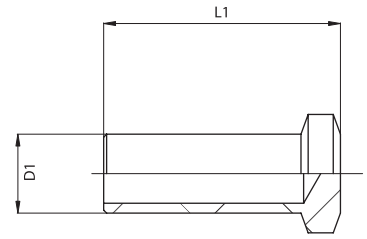

Plug

Code	Item	D_1	L_1	Weight (g)
029441	RT 33 04 04	4	18	1
029442	RT 33 06 06	6	22	1
029443	RT 33 08 08	8	25	1
029444	RT 33 10 10	10	26	1

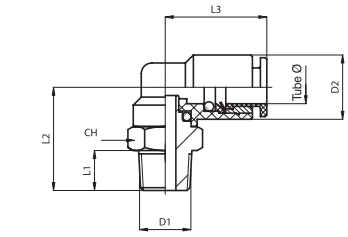

BSPT swivel elbow
Body in acetal resin
Nickel plated brass screw with tefloned thread

Code	Item	Tube ø	D_1	D_2	L_1	L_2	L_3	CH	Weight (g)
029161	RT 16 04 18	4	1/8”	9,7	7,5	17	15	10	7
029162	RT 16 04 14	4	1/4”	9,7	11	20,5	15	14	13
029163	RT 16 06 18	6	1/8”	12	7,5	18,5	19	12	10
029164	RT 16 06 14	6	1/4”	12	11	22,5	19	14	14
029165	RT 16 08 18	8	1/8”	14	7,5	20	20,5	14	13
029166	RT 16 08 14	8	1/4”	14	11	23,5	20,5	14	15
029167	RT 16 08 38	8	3/8”	14	11,5	24,5	20,5	17	24
029168	RT 16 10 14	10	1/4”	16,5	11	25,5	23,5	16	19
029169	RT 16 10 38	10	3/8”	16,5	11,5	26,5	23,5	17	23

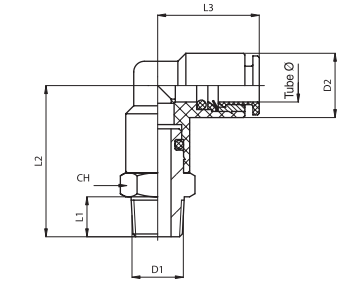

Extended BSPT swivel elbow
Body in acetal resin
Nickel plated brass screw with tefloned thread

Code	Item	Tube ø	D_1	D_2	L_1	L_2	L_3	CH	Weight (g)
029181	RT 17 04 18	4	1/8”	9,7	7,5	25,5	15	10	19
029182	RT 17 04 14	4	1/4”	9,7	11	29	15	14	14
029183	RT 17 06 18	6	1/8”	12	7,5	29,5	19	12	14
029184	RT 17 06 14	6	1/4”	12	11	33	19	14	18
029185	RT 17 08 18	8	1/8”	14	7,5	33	20,5	14	20
029186	RT 17 08 14	8	1/4”	14	11	36,5	20,5	14	21
029187	RT 17 08 38	8	3/8”	14	11,5	38	20,5	17	26
029188	RT 17 10 14	10	1/4”	16,5	11	41,5	23,5	16	32
029189	RT 17 10 38	10	3/8”	16,5	11,5	42,5	23,5	17	30

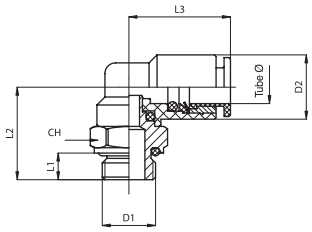

BSP swivel elbow
Body in acetal resin
Nickel plated brass screw with sealing OR

Code	Item	Tube ø	D_1	D_2	L_1	L_2	L_3	CH	Weight (g)
029201	RT 18 04 M5	4	M5	9,7	4	15	15	9	8
029202	RT 18 04 18	4	1/8”	9,7	5	15	15	13	5
029203	RT 18 04 14	4	1/4”	9,7	6,5	17	15	16	12
029204	RT 18 06 M5	6	M5	12	4	15	19	12	8
029205	RT 18 06 18	6	1/8”	12	5	16,5	19	13	10
029206	RT 18 06 14	6	1/4”	12	6,5	18,5	19	16	14
029207	RT 18 08 18	8	1/8”	14	5	17,5	20,5	14	11
029208	RT 18 08 14	8	1/4”	14	6,5	19,5	20,5	16	14
029209	RT 18 08 38	8	3/8”	14	7	21,5	20,5	20	23
029210	RT 18 10 14	10	1/4”	16,5	6,5	21,5	23,5	16	17
029211	RT 18 10 38	10	3/8”	16,5	7	23,5	23,5	20	24

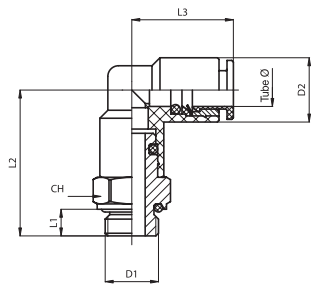

Extended BSP swivel elbow
Body in acetal resin
Nickel plated brass screw with sealing OR

Code	Item	Tube ø	D_1	D_2	L_1	L_2	L_3	CH	Weight (g)
029221	RT 19 04 M5	4	M5	9,7	4	23,5	15	9	8
029222	RT 19 04 18	4	1/8”	9,7	5	23,5	15	13	9
029223	RT 19 04 14	4	1/4”	9,7	6,5	23,5	15	16	13
029224	RT 19 06 M5	6	M5	12	4	26	19	12	13
029225	RT 19 06 18	6	1/8”	12	5	27,5	19	13	13
029226	RT 19 06 14	6	1/4”	12	6,5	29,5	19	16	17
029227	RT 19 08 18	8	1/8”	14	5	30,5	20,5	14	19
029228	RT 19 08 14	8	1/4”	14	6,5	32,5	20,5	16	20
029229	RT 19 08 38	8	3/8”	14	7	34,5	20,5	20	27
029230	RT 19 10 14	10	1/4”	16,5	6,5	37	23,5	16	27
029231	RT 19 10 38	10	3/8”	16,5	7	38	23,5	20	31

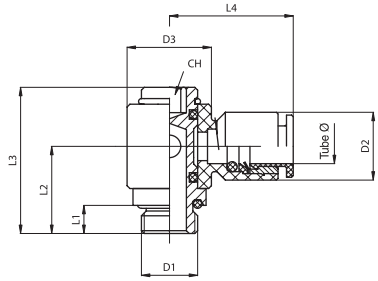

BSP elbow hex wrench
Body in acetal resin
Nickel plated brass screw with sealing OR

Code	Item	Tube ø	D_1	D_2	D_3	L_1	L_2	L_3	L_4	CH	Weight (g)
029241	RT 20 04 M5	4	M5	9,7	9,7	4	11,5	20,5	17	4	6
029242	RT 20 04 18	4	1/8”	9,7	15	5	15	25,5	18,5	4	14
029250	RT 20 06 M5	6	M5	12	9,7	4	11,5	20,5	21	4	8
029243	RT 20 06 18	6	1/8”	12	15	5	15	25,5	22	4	14
029244	RT 20 06 14	6	1/4”	12	18	6,5	18	29,5	23,5	5	23
029245	RT 20 08 18	8	1/8”	14	15	5	15	25,5	22,5	4	15
029246	RT 20 08 14	8	1/4”	14	18	6,5	18	29,5	24	5	24
029247	RT 20 08 38	8	3/8”	14	23	7	21	34	26	6	24
029248	RT 20 10 14	10	1/4”	16,5	18	6,5	18	29,5	26	5	25
029249	RT 20 10 38	10	3/8”	16,5	23	7	21	34	28	6	41

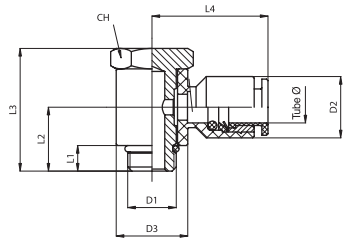

Single banjo elbow
Body in acetal resin - Nickel plated brass screw

Code	Item	Tube ø	D_1	D_2	D_3	L_1	L_2	L_3	L_4	CH	Weight (g)
029471	RT 37 04 M5	4	M5	9,7	9,7	4	9	17	17	8	5
029472	RT 37 04 18	4	1/8”	9,7	15	5	12,5	24	18,5	14	16
029473	RT 37 06 18	6	1/8”	12	15	5	12,5	24	22	14	17
029474	RT 37 06 14	6	1/4”	12	18	6,5	14	28,5	23,5	17	29
029475	RT 37 08 18	8	1/8”	14	15	5	12,5	24	22,5	14	17
029476	RT 37 08 14	8	1/4”	14	18	6,5	14	28,5	24	17	30
029477	RT 37 08 38	8	3/8”	14	23	7	17	32	26	20	44
029478	RT 37 10 14	10	1/4”	16,5	18	6,5	15	28,5	26	17	30
029479	RT 37 10 38	10	3/8”	16,5	23	7	17	32	28	20	44

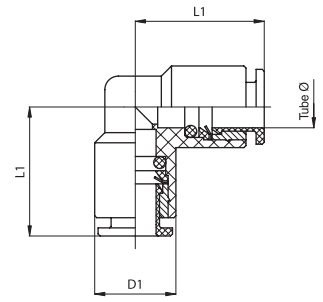

Equal elbow

Code	Item	Tube ø	D_1	L_1	Weight (g)
029141	RT 14 04 04	4	9,7	15	3
029142	RT 14 06 06	6	12	19	6
029143	RT 14 08 08	8	14	20,5	7
029144	RT 14 10 10	10	16	23,5	9

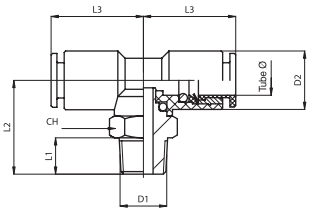

BSPT swivel tee
Body in acetal resin
Nickel plated brass screw with tefloned thread

Code	Item	Tube ø	D_1	D_2	L_1	L_2	L_3	CH	Weight (g)
029261	RT 21 04 18	4	1/8”	9,7	7,5	17	15	10	9
029262	RT 21 04 14	4	1/4”	9,7	11	20,5	15	14	14
029263	RT 21 06 18	6	1/8”	12	7,5	18,5	19	12	12
029264	RT 21 06 14	6	1/4”	12	11	22,5	19	14	17
029265	RT 21 08 18	8	1/8”	14	7,5	20	20,5	14	16
029266	RT 21 08 14	8	1/4”	14	11	23,5	20,5	14	18
029267	RT 21 08 38	8	3/8”	14	11,5	24,5	20,5	17	25
029268	RT 21 10 14	10	1/4”	16,5	11	25,5	23,5	16	24
029269	RT 21 10 38	10	3/8”	16,5	11,5	26,5	23,5	17	26

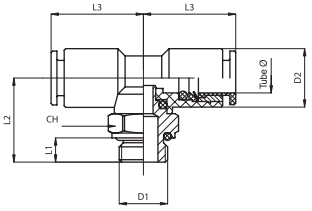

BSP swivel tee
Body in acetal resin
Nickel plated brass screw with sealing OR

Code	Item	Tube ø	D_1	D_2	L_1	L_2	L_3	CH	Weight (g)
029281	RT 22 04 M5	4	M5	9,7	4	15	15	9	7
029282	RT 22 04 18	4	1/8”	9,7	5	15	15	13	10
029283	RT 22 04 14	4	1/4”	9,7	6,5	17	15	16	14
029284	RT 22 06 M5	6	M5	12	4	15	19	12	11
029285	RT 22 06 18	6	1/8”	12	5	16,5	19	13	12
029286	RT 22 06 14	6	1/4”	12	6,5	18,5	19	16	16
029287	RT 22 08 18	8	1/8”	14	5	17,5	20,5	14	14
029288	RT 22 08 14	8	1/4”	14	6,5	19,5	20,5	16	18
029289	RT 22 08 38	8	3/8”	14	7	21,5	20,5	20	26
029290	RT 22 10 14	10	1/4”	16,5	6,5	21,5	23,5	16	20
029291	RT 22 10 38	10	3/8”	16,5	7	23,5	23,5	20	28

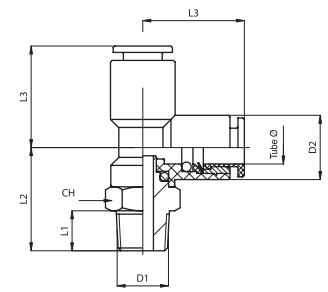

BSPT swivel side tee
Body in acetal resin
Nickel plated brass screw with tefloned thread

Code	Item	Tube ø	D_1	D_2	L_1	L_2	L_3	CH	Weight (g)
029301	RT 23 04 18	4	1/8”	9,7	7,5	17	15	10	9
029302	RT 23 04 14	4	1/4”	9,7	11	20,5	15	14	14
029303	RT 23 06 18	6	1/8”	12	7,5	18,5	19	12	12
029304	RT 23 06 14	6	1/4”	12	11	22,5	19	14	17
029305	RT 23 08 18	8	1/8”	14	7,5	20	20,5	14	16
029306	RT 23 08 14	8	1/4”	14	11	23,5	20,5	14	22
029307	RT 23 08 38	8	3/8”	14	11,5	24,5	20,5	17	25
029308	RT 23 10 14	10	1/4”	16,5	11	25,5	23,5	16	23
029309	RT 23 10 38	10	3/8”	16,5	11,5	26,5	23,5	17	26

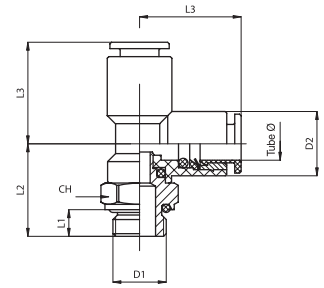

BSP swivel side tee
Body in acetal resin
Nickel plated brass screw with sealing OR

Code	Item	Tube ø	D_1	D_2	L_1	L_2	L_3	CH	Weight (g)
029321	RT 24 04 M5	4	M5	9,7	4	15	15	9	7
029322	RT 24 04 18	4	1/8”	9,7	5	15	15	13	9
029323	RT 24 04 14	4	1/4”	9,7	6,5	17	15	16	14
029324	RT 24 06 M5	6	M5	12	4	15	19	12	10
029325	RT 24 06 18	6	1/8”	12	5	16,5	19	13	12
029326	RT 24 06 14	6	1/4”	12	6,5	18,5	19	16	15
029327	RT 24 08 18	8	1/8”	14	5	17,5	20,5	14	14
029328	RT 24 08 14	8	1/4”	14	6,5	19,5	20,5	16	21
029329	RT 24 08 38	8	3/8”	14	7	21,5	20,5	20	26
029330	RT 24 10 14	10	1/4”	16,5	6,5	21,5	23,5	16	21
029331	RT 24 10 38	10	3/8”	16,5	7	23,5	23,5	20	27

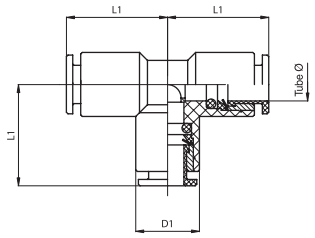

Equal tee

Code	Item	Tube ø	D_1	L_1	Weight (g)
029151	RT 15 04 04	4	9,7	15	6
029152	RT 15 06 06	6	12	19	9
029153	RT 15 08 08	8	14	20,5	10
029154	RT 15 10 10	10	16	23,5	13

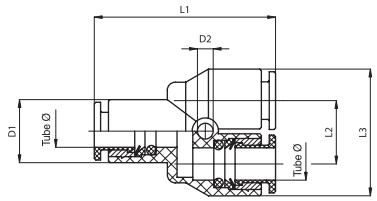

Y piece

Code	Item	Tube ø	D_1	D_2	L_1	L_2	L_3	Weight (g)
029401	RT 29 04 04	4	9,7	2,7	27	10,7	20,5	5
029402	RT 29 06 06	6	12	3,2	34	13	25	9
029403	RT 29 08 08	8	14	3,2	36	15	29	11
029404	RT 29 10 10	10	16	3,2	41	18	34,5	14

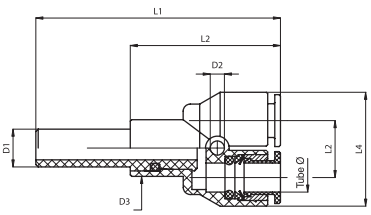

Stem Y

Code	Item	Tube ø	D_1	D_2	D_3	L_1	L_2	L_3	L_4	Weight (g)
029411	RT 30 04 04	4	4	2,7	9,7	40	25	10,7	20,5	5
029412	RT 30 04 06	4	6	2,7	9,7	43	25	10,7	20,5	5
029413	RT 30 04 08	4	8	2,7	9,7	45	25	10,7	20,5	6
029414	RT 30 06 06	6	6	3,2	12	50	32	13	25	8
029415	RT 30 08 08	8	8	3,2	14	54	34	15	29	11

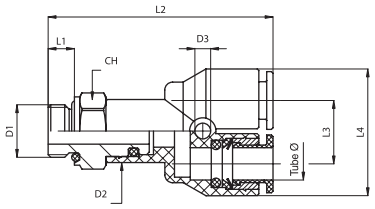

BSP swivel Y
Body in acetal resin
Nickel plated brass screw with sealing OR

Code	Item	Tube ø	D_1	D_2	D_3	L_1	L_2	L_3	L_4	CH	Weight (g)
029421	RT 31 04 M5	4	M5	9,7	2,7	4	34	10,7	20,5	9	9
029422	RT 31 04 18	4	1/8”	9,7	2,7	5	34	10,7	20,5	13	11
029423	RT 31 04 14	4	1/4”	9,7	2,7	6,5	36	10,7	20,5	16	14
029424	RT 31 06 18	6	1/8”	12	3,2	5	41	13	22,5	13	15
029425	RT 31 06 14	6	1/4”	12	3,2	6,5	43	13	25	16	19
029426	RT 31 08 18	8	1/8”	14	3,2	5	43	15	25	14	20
029427	RT 31 08 14	8	1/4”	14	3,2	6,5	45	15	29	16	22
029428	RT 31 08 38	8	3/8”	14	3,2	7	47	15	29	20	30

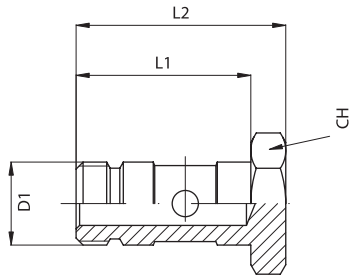

Single hollow bolt

Code	Item	D_1	L_1	L_2	CH	Weight (g)
029461	RT 36 00 M5	M5	14	17	8	2
029462	RT 36 00 18	1/8”	20	24	14	13
029463	RT 36 00 14	1/4”	23,5	28,5	17	24
029464	RT 36 00 38	3/8”	27	32	20	36

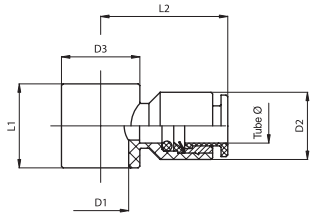

Single banjo

Code	Item	Tube ø	D_1	D_2	D_3	L_1	L_2	Weight (g)
029391	RT 28 04 M5	4	M5	9,7	9,7	10	17	2
029392	RT 28 04 18	4	1/8”	9,7	15	15	18,5	3
029393	RT 28 06 18	6	1/8”	12	15	15	22	4
029394	RT 28 06 14	6	1/4”	12	18	17	23,5	5
029395	RT 28 08 18	8	1/8”	14	15	15	22,5	5
029396	RT 28 08 14	8	1/4”	14	18	17	24	6
029397	RT 28 08 38	8	3/8”	14	23	20	26	8
029398	RT 28 10 14	10	1/4	16,5	18	17	26	7
029399	RT 28 10 38	10	3/8”	16,5	23	20	28	9

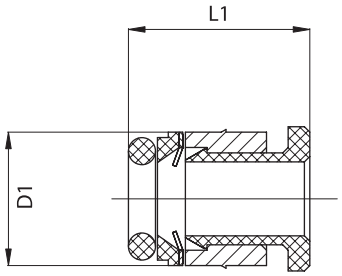

Stem cartridge

Code	Item	Tube ø	D_1	L_1	Weight (g)
029451	RT 34 04 04	4	7,6	10,5	1
029452	RT 34 06 06	6	9,6	11,3	2
029453	RT 34 08 08	8	11,8	11,5	3
029454	RT 34 10 10	10	13,8	13,5	4

CARTRIDGES SEAT DRILLING PLAN AND THEIR ASSEMBLY IN PLASTIC BODIES

Tube ø	ø A	øB	øC	øD	E	F	G
4	7,6	7	4,15	3	10,1	8,6	5,8
6	9,7	9,05	6,15	5	13,2	9,4	6,4
8	11,8	10,95	8,15	6	13,5	9,7	6,8
10	13,8	13,15	10,15	8	48,8	11,3	7,8

Drilling tool		
Code	Item	Tube ø
029491	RT 40 04 04	4
029492	RT 40 06 06	6
029493	RT 40 08 08	8
029494	RT 40 10 10	10

Pressing tool		
Code	Item	Tube ø
029497	RT 41 04 04	4
029498	RT 41 06 06	6
029499	RT 41 08 08	8
029500	RT 41 10 10	10

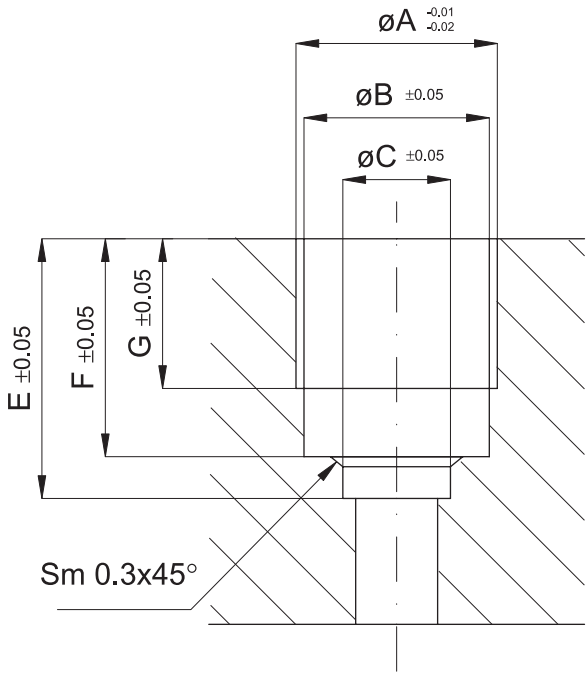

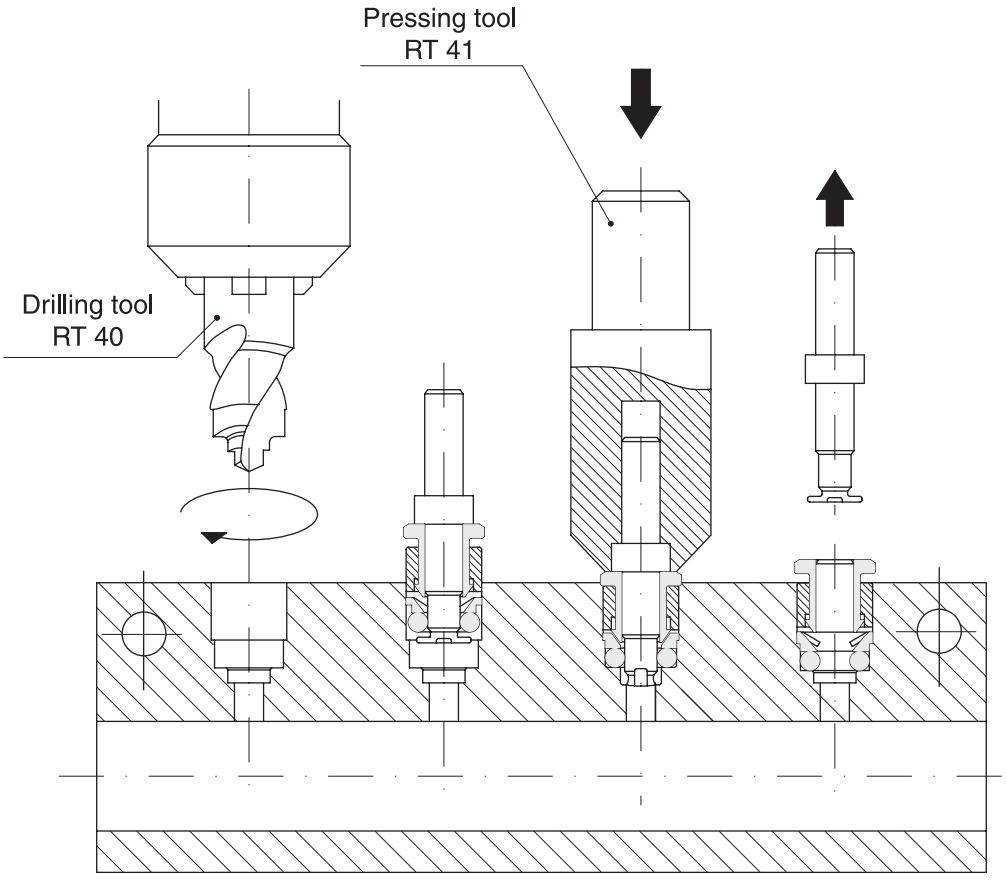

Push-in fittings series RP
In polypropylene

Version	Type
BSPT stud	RP11
Union	RP12
Reducer	RP13
Plug	RP14
BSPT swivel elbow	RP15
Equal elbow	RP16
BSPT swivel tee	RP17
BSPT swivel side tee	RP18
Equal tee	RP19
Y piece	RP20
BSPT swivel Y	RP21



Series of push-in fittings to use in alimentary, medical and chemical fields.
Available in various configurations (studs, albows, T, Y), with taper threads.
Thanks to the body completely in polypropylene, to the metal parts in stainless steel AISI 304 SST and the seals in EPDM they fit in aggressive environments (resistant to various chemical agents), in alimentary (FDA certified) and medical fields (for clean places, but not for fluids in direct contact with the human body).
Each fitting is sterilised by ultra-sounds and is assembled without oils and greases in barren chamber.

External tube ø (mm)	4	5	6	8	10	12
Code	04	05	06	08	10	12

Threads	M5	1/8”	1/4”	3/8”	1/2”
Code	M5	18	14	38	12

* How to order: RP110618

RP11	06	18
Type	Tube ø code	Thread or tube code

* For standard items, codes and dimensions see tables from page 4.10.2.

4

Technical data	
Fluid	Compressed air, gases, acids, alimentary fluids
Pressure range	0 ÷ 7 bar (vacuum resistance: - 740 mm. Hg)
Temperature range	-20 °C ÷ + 80°C
Taper threads	UNI - ISO 7 / 1 (BSPT)
Metric threads	ISO R / 262
Connection tubes	Calibrated nylon, polyurethane and rilsan
Tube tolerances	± 0,05 mm
Materials	Body thread and release collar: Polypropylene Thread M5: Stainless steel AISI 304 SST Collet: Stainless steel AISI 301 SST Seals: EPDM

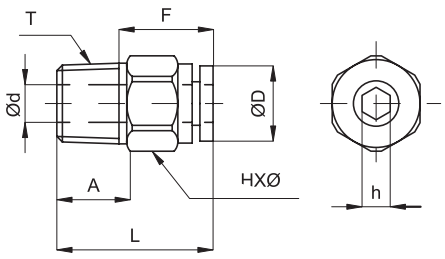

BSPT stud

Code	Item	Tube ø	T	L	A	F	HX ø	H	D	d	Weight (g)
848001	RP 11 04 M5	4	M5x0,8	18,5	4	13,5	10x11	-	10	2	5
848002	RP 11 04 18	4	1/8"	20	9	13,5	12x13	2,5	10	2,5	2
848003	RP 11 04 14	4	1/4"	23	12	13,5	14x15,4	2,5	10	2,5	2
848004	RP 11 06 M5	6	M5x0,8	22	4	15	12x13	-	12	2	7
848005	RP 11 06 18	6	1/8"	23	9	15	14x15,4	4	12,5	4	2
848006	RP 11 06 14	6	1/4"	26	12	15	14x15,4	4	12,5	4	3
848007	RP 11 08 18	8	1/8"	26,5	9	16	17x18,5	6	14,5	6	4
848008	RP 11 08 14	8	1/4"	25,5	12	16	17x18,5	6	14,5	6	4
848009	RP 11 10 14	10	1/4"	31,5	12	19	19x21	-	17,5	8	7
848010	RP 11 10 38	10	3/8"	30,5	14	19	19x21	-	17,5	8	7
848011	RP 11 12 38	12	3/8"	31,5	14	20	22x24,5	-	21	10	9
848012	RP 11 12 12	12	1/2"	33,5	16	20	22x24,5	-	21	10	11

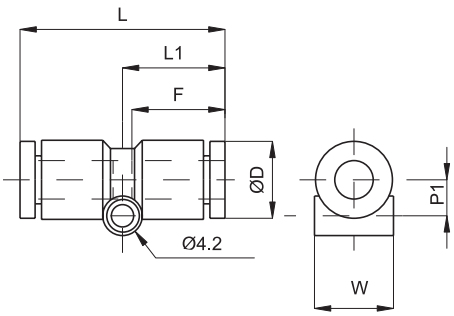

Union

Code	Item	Tube ø	L	L_1	P_1	F	D	W	Weight (g)
848121	RP 12 04 04	4	30	15	5	13,5	9,7	9,7	2
848122	RP 12 06 06	6	33	16,5	6	15	12,5	12,5	4
848123	RP 12 08 08	8	35	17,5	7	16	14,5	14,5	5
848124	RP 12 10 10	10	41	20,5	8,5	19	17,5	17,5	10
848125	RP 12 12 12	12	43	21,5	9,8	20	20	20	14

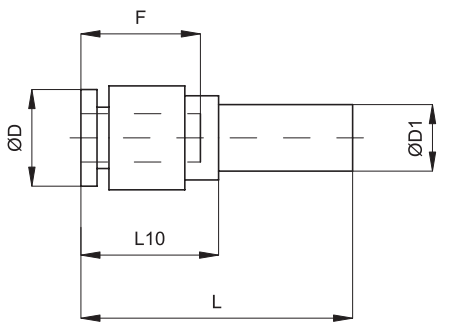

Reducer

Code	Item	Tube ø	D_1	L	L_{10}	F	D	Weight (g)
848161	RP 13 04 06	4	6	32,5	16,5	13,5	9,7	2
848162	RP 13 04 08	4	8	29	13	13,5	9,7	2
848163	RP 13 06 08	6	8	34	17	15	12,5	2
848164	RP 13 06 10	6	10	31,5	14	15	12,5	3
848165	RP 13 08 10	8	10	35,5	18	16	14,5	3
848166	RP 13 08 12	8	12	33	14	16	14,5	4
848167	RP 13 10 12	10	12	39	20	19	17,5	8

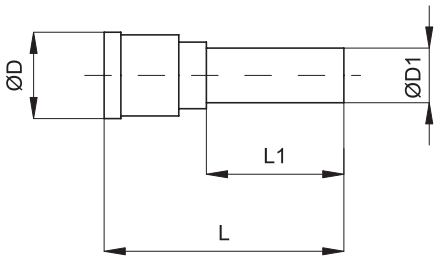

Plug

Code	Item	Tube ø	D_1	L	L_1	D	Weight (g)
848171	RP 14 04 04	4	4	28	15,5	7,7	0,5
848172	RP 14 06 06	6	6	28	16	9,7	0,8
848173	RP 14 08 08	8	8	29	16	11,7	1,1
848174	RP 14 10 10	10	10	32	17,7	14	1,6
848175	RP 14 12 12	12	12	34	20,4	16	2,4

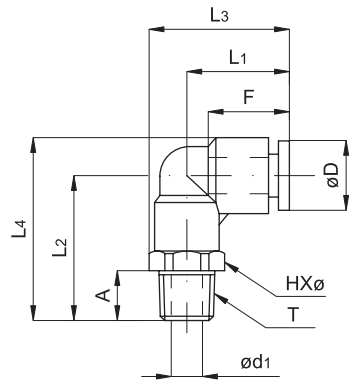

BSPT swivel elbow

Code	Item	Tube ø	T	L_1	L_2	L_3	L_4	A	F	HX ø	D	d_1	Weight (g)
848041	RP 15 04 M5	4	M5x0,8	16,5	20,5	22	25,5	4	13,5	10x11	9,7	2	7
848042	RP 15 04 18	4	1/8”	16,5	23,5	22	28,5	9	13,5	10x11	9,7	5	2
848043	RP 15 04 14	4	1/4”	16,5	27,5	24	32,5	12	13,5	14x15,4	9,7	7	3
848044	RP 15 06 M5	6	M5x0,8	18,5	22,5	25	29	4	15	12x13	12,5	2	10
848045	RP 15 06 18	6	1/8”	18,5	26	25	32,5	9	15	12x13	12,5	4,5	4
848046	RP 15 06 14	6	1/4”	18,5	30	26	36,5	12	15	14x15,4	12,5	7	4
848047	RP 15 08 18	8	1/8”	20,5	29	28	36,5	9	16	14x15,4	14,5	6	5
848048	RP 15 08 14	8	1/4”	20,5	31	28	38,5	12	16	14x15,4	14,5	6,5	6
848049	RP 15 10 14	10	1/4”	24,5	37	34	46	12	19	17x18,5	17,5	8	9
848050	RP 15 10 38	10	3/8”	24,5	37	34	46	14	19	17x18,5	17,5	9	11
848051	RP 15 12 38	12	3/8”	26	38,5	36,5	48,5	14	20	19x21	20	10	13
848052	RP 15 12 12	12	1/2”	26	41,5	38	51,5	16	20	22x24	20	12	15

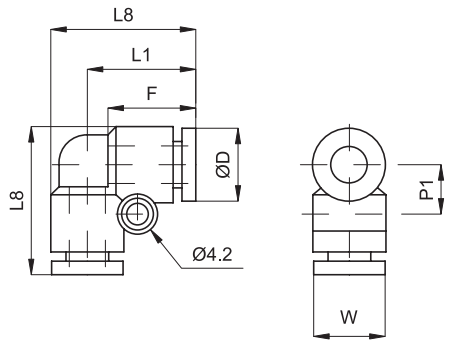

Equal elbow

Code	Item	Tube ø	L_1	L_8	P_1	F	D	W	Weight (g)
848131	RP 16 04 04	4	16,5	21,5	7	13,5	9,7	9,7	3
848132	RP 16 06 06	6	18,5	25	8,5	15	12,5	12,5	4
848133	RP 16 08 08	8	20,5	28	9,5	16	14,5	14,5	6
848134	RP 16 10 10	10	24,5	33,5	11	19	17,5	17,5	12
848135	RP 16 12 12	12	26	36	12	20	20	20	16

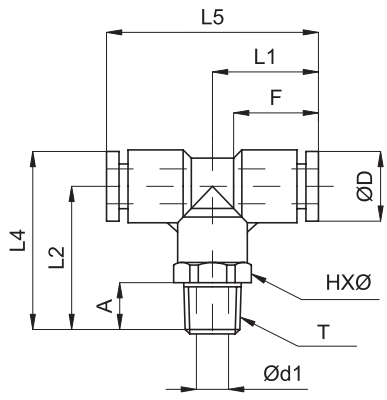

BSPT swivel tee

Code	Item	Tube ø	T	L_1	L_2	L_4	L_5	A	F	HX ø	D	d_1	Weight (g)
848061	RP 17 04 M5	4	M5x0,8	16,5	20,5	25,5	33	4	13,5	10x11	9,7	2	8
848062	RP 17 04 18	4	1/8”	16,5	23,5	28,5	33	9	13,5	10x11	9,7	5	3
848063	RP 17 04 14	4	1/4”	16,5	27,5	32,5	33	12	13,5	14x15,4	9,7	7	4
848064	RP 17 06 M5	6	M5x0,8	18,5	22,5	29	37	4	15	12x13	12,5	2	12
848065	RP 17 06 18	6	1/8”	18,5	26	32,5	37	9	15	12x13	12,5	4,5	5
848066	RP 17 06 14	6	1/4”	18,5	30	36,5	37	12	15	14x15,4	12,5	7	6
848067	RP 17 08 18	8	1/8”	20,5	29	36,5	41	9	16	14x15,4	14,5	6	7
848068	RP 17 08 14	8	1/4”	20,5	31	38,5	41	12	16	14x15,4	14,5	6,5	8
848069	RP 17 10 14	10	1/4”	24,5	37	46	49	12	19	17x18,5	17,5	8	14
848070	RP 17 10 38	10	3/8”	24,5	37	46	49	14	19	17x18,5	17,5	9	16
848071	RP 17 12 38	12	3/8”	26	38,5	48,5	52	14	20	19x21	20	10	19
848072	RP 17 12 12	12	1/2”	26	41,5	51,5	52	16	20	22x24	20	12	21

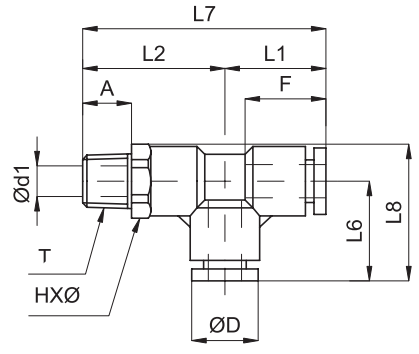

BSPT swivel side tee

Code	Item	Tube ø	T	L_1	L_2	L_6	L_7	L_8	A	F	HX ø	D	d_1	Weight (g)
848081	RP 18 04 M5	4	M5x0,8	16,5	20,5	16,5	37	22	4	13,5	10x11	9,7	2	8
848082	RP 18 04 18	4	1/8”	16,5	23,5	16,5	40	33	9	13,5	10x11	9,7	5	3
848083	RP 18 04 14	4	1/4”	16,5	27,5	16,5	44	24,2	12	13,5	14x15,4	9,7	7	4
848084	RP 18 06 M5	6	M5x0,8	18,5	22,5	18,5	40	25	4	15	12x13	12,5	2	12
848085	RP 18 06 18	6	1/8”	18,5	26	18,5	44,5	25	9	15	12x13	12,5	4,5	5
848086	RP 18 06 14	6	1/4”	18,5	30	18,5	48,5	26,2	12	15	14x15,4	12,5	7	6
848087	RP 18 08 18	8	1/8”	20,5	29	20,5	49,5	28,2	9	16	14x15,4	14,5	6	7
848088	RP 18 08 14	8	1/4”	20,5	31	20,5	51,5	28,2	12	16	14x15,4	14,5	6,5	8
848089	RP 18 10 14	10	1/4”	24,5	37	24,5	61,5	33,8	12	19	17x18,5	17,5	8	14
848090	RP 18 10 38	10	3/8”	24,5	37	24,5	61,5	33,8	14	19	17x18,5	17,5	9	16
848091	RP 18 12 38	12	3/8”	26	38,5	26	64,5	36,5	14	20	19x21	20	10	19
848092	RP 18 12 12	12	1/2”	26	41,5	26	67,5	38	16	20	22x24	20	12	21

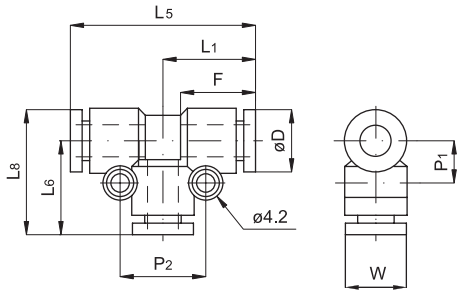

Equal tee

Code	Item	Tube ø	L1	L5	L6	L8	P1	P2	F	D	W	Weight (g)
848141	RP 19 04 04	4	16,5	33	16,5	21,5	7	14	13,5	9,7	9,7	4
848142	RP 19 06 06	6	18,5	37	18,5	25	8,5	17	15	12,5	12,5	7
848143	RP 19 08 08	8	20,5	41	20,5	28	9,5	19	16	14,5	14,5	9
848144	RP 19 10 10	10	24,5	49	24,5	33,5	11	22	19	17,5	17,5	17
848145	RP 19 12 12	12	26	52	26	36	-	24	20	20	20	23

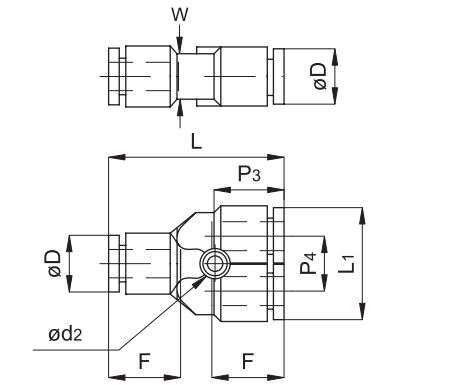

Y piece

Code	Item	Tube ø	L	L1	F	P3	P4	W	D	d2	Weight gr.
848151	RP 20 04 04	4	32	21	13,5	12,5	11	9,7	9,7	3,2	4
848152	RP 20 06 06	6	37	25	15	14,5	12	12,5	12,5	4,2	6
848153	RP 20 08 08	8	42	29	16	16	14	14,5	14,5	4,2	9
848154	RP 20 10 10	10	47,5	35	19	18	17,5	17,5	17,5	4,2	17
848155	RP 20 12 12	12	53	40	20	20	20	20	20	4,2	24

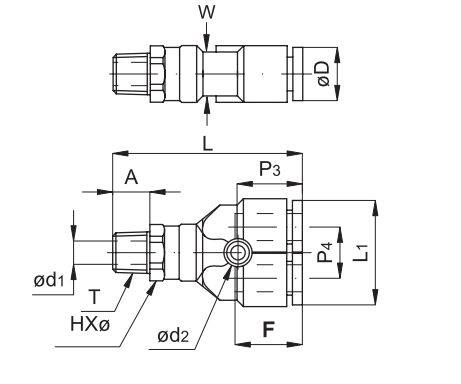

BSPT swivel Y

Code	Item	Tube ø	T	L	L1	A	F	HX ø	P3	P4	W	D	d1	d2	Weight (g)
848101	RP 21 04 M5	4	M5x0,8	37,5	21	4	13,5	10x11	12,5	11	9,7	9,7	2	3,2	9
848102	RP 21 04 18	4	1/8”	40	21	9	13,5	10x11	12,5	11	9,7	9,7	5	3,2	4
848103	RP 21 04 14	4	1/4”	44,5	21	12	13,5	14x15,4	12,5	11	9,7	9,7	7	3,2	5
848104	RP 21 06 M5	6	M5x0,8	41	25	4	15	12x13	14,5	12	12,5	12,5	2	3,2	13
848105	RP 21 06 18	6	1/8”	44,5	25	9	15	12x13	14,5	12	12,5	12,5	4,5	4,2	6
848106	RP 21 06 14	6	1/4”	48,5	25	12	15	14x15,4	14,5	12	12,5	12,5	7	4,2	7
848107	RP 21 08 18	8	1/8”	49,5	29	9	16	14x15,4	16	14	14,5	14,5	6	4,2	8
848108	RP 21 08 14	8	1/4”	51,5	29	12	16	14x15,4	16	14	14,5	14,5	6,5	4,2	9
848109	RP 21 10 14	10	1/4”	59,5	35	12	19	17x18,5	18	17,5	17,5	17,5	8	4,2	15
848110	RP 21 10 38	10	3/8”	59,5	35	14	19	17x18,5	18	17,5	17,5	17,5	9	4,2	16
848111	RP 21 12 38	12	3/8”	63,5	40	14	20	19x21	20	20	20	20	10	4,2	22
848112	RP 21 12 12	12	1/2”	66,5	40	16	20	22x24	20	20	20	20	12	4,2	23

Rapid fittings series C
In nickel plated brass

Version	Type
BSPT stud	C11
Swivel BSPT stud	C29
BSP stud	C12
Female BSP stud	C13
Union	C14
Bulkhead	C15
BSPT elbow	C16
BSP elbow	C40
BSP elbow hex wrench	C30
Single banjo elbow	C34
Female elbow	C17
Equal elbow	C18
BSPT tee	C20
BSP swivel tee hex wrench	C31

Version	Type
Single banjo tee	C36
BSPT lateral tee	C21
Equal tee	C19
Equal X	C22
Single banjo	C23
Double banjo	C24
Single hollow bolt	R31
Double hollow bolt	R32
Triple hollow bolt	R33
Single banjo	C37
Double banjo	C38
Single banjo bolt	C25
Double banjo bolt	C26
Nut	C27
Nut with spring	C32



Series of rapid fittings for connecting nylon and polyurethane tubes.
They should be used in all those applications where a safer tube-fitting connection is required.
Available in various configurations (studs, elbows, T) and with threads Gas taper (BSPT) and Gas parallel (BSP).
For sealing washers (parallel threads) see page 4.65.41.

* How to order: C110618

C11	06	18
Type	Tube ø code	Tube or thread code

* For standard items, codes and dimensions see tables from page 4.20.2.

External tube ø (mm)	4	5	6	8	10	12	15
Code	04	05	06	08	10	12	15

Threads	M5	1/8"	1/4"	3/8"	1/2"	M12x1	M12x1,25	M12x1,5
Code	M5	18	14	38	12	12x1	12x1,25	12x1,5

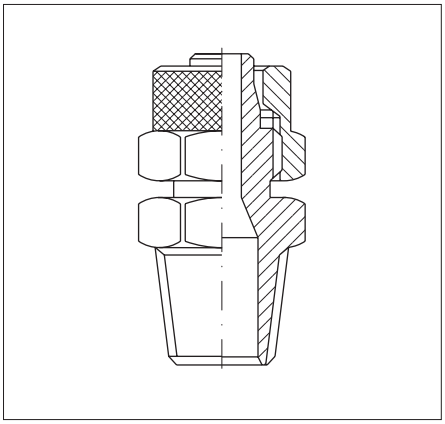

Technical data	
Fluid	Compressed air
Pressure range	Fittings nominal pressure is higher than the tube maximum one
Temperature range	-20 °C ÷ + 90°C
Parallel threads	UNI - ISO 228 / 1 (BSP)
Taper threads	UNI - ISO 7 / 1 (BSPT)
Metric threads	ISO R / 262
Connection tubes	Calibrated nylon, polyethylene, polyurethane and rilsan
Tube tolerances	from ø 4 mm to10 mm: ± 0,05 mm - ø 12 mm and 15 mm: ± 0,1 mm
Materials	Body and nut: Nickel plated brass Seals: O-ring in nitrile rubber (NBR) where provided Washers: In acetal resin where provided

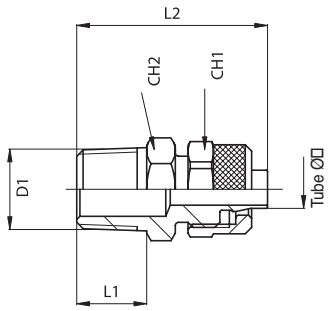

BSPT stud

Code	Item	Tube ø	D_1	L_1	L_2	CH_1	CH_2
021001	C 11 04 18	4-2,5	1/8”	7,5	23	7	11
021003	C 11 05 18	5-3	1/8”	7,5	25,5	12	11
021004	C 11 06 18	6-4	1/8”	7,5	25,5	12	11
021005	C 11 06 14	6-4	1/4”	11	29	12	14
021006	C 11 06 38	6-4	3/8”	11,5	31	12	17
021007	C 11 08 18	8-6	1/8”	7,5	26,5	14	13
021008	C 11 08 14	8-6	1/4”	11	30	14	14
021009	C 11 08 38	8-6	3/8”	11,5	31	14	17
021010	C 11 10 14	10-8	1/4”	11	32,5	16	14
021011	C 11 10 38	10-8	3/8”	11,5	33	16	17
021012	C 11 10 12	10-8	1/2”	14	36,5	16	22
021013	C 11 12 38	12-10	3/8”	11,5	34,5	19	17
021014	C 11 12 12	12-10	1/2”	14	38	19	22
021015	C 11 15 12	15-12,5	1/2”	14	40,5	22	22
021016	C 11 10 18	10-8	1/8”	7,5	29	16	14

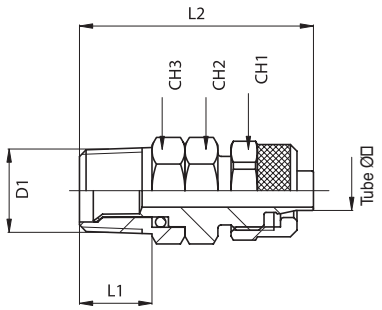

Swivel BSPT stud

Code	Item	Tube ø	D_1	L_1	L_2	CH_1	CH_2	CH_3
021421	C 29 06 18	6-4	1/8”	7,5	31	12	11	11
021422	C 29 06 14	6-4	1/4”	11	34,5	12	14	14
021423	C 29 08 18	8-6	1/8”	7,5	32	14	12	11
021424	C 29 08 14	8-6	1/4”	11	35,5	14	14	14
021425	C 29 10 14	10-8	1/4”	11	37,5	16	14	14
021426	C 29 10 38	10-8	3/8”	11,5	38	16	14	17
021427	C 29 12 38	12-10	3/8”	11,5	40	19	17	17
021428	C 29 12 12	12-10	1/2”	14	44	19	17	22

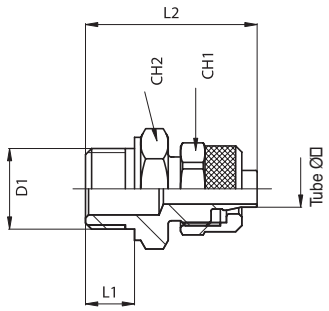

BSP stud

Code	Item	Tube ø	D_1	L_1	L_2	CH_1	CH_2
021030	C 12 04 M5	4-2,5	M5	5	19	7	7
021031	C 12 04 18	4-2,5	1/8”	6	22	7	14
021032	C 12 05 M5	5-3	M5	5	21	8	8
021033	C 12 05 18	5-3	1/8”	6	24,5	12	14
021034	C 12 06 M5	6-4	M5	5	21	9	8
021035	C 12 06 18	6-4	1/8”	6	24,5	12	14
021036	C 12 06 14	6-4	1/4”	8	27	12	17
021046	C 12 06 38	6-4	3/8”	9	29	12	20
021037	C 12 08 18	8-6	1/8”	6	25,5	14	14
021038	C 12 08 14	8-6	1/4”	6	28	14	17
021039	C 12 08 38	8-6	3/8”	9	29	14	20
021047	C 12 10 18	10-8	1/8”	6	29	16	14
021040	C 12 10 14	10-8	1/4”	8	30	16	17
021041	C 12 10 38	10-8	3/8”	9	31	16	20
021042	C 12 10 12	10-8	1/2”	10	33	16	24
021043	C 12 12 38	12-10	3/8”	9	32,5	19	20
021044	C 12 12 12	12-10	1/2”	10	34,5	19	24
021045	C 12 15 12	15-12,5	1/2”	10	36,5	22	24
021049	C 12 06 12x1,25	6-4	12x1,25	15	34	12	14
021050	C 12 06 12x1,5	6-4	12x1,5	15	34	12	14

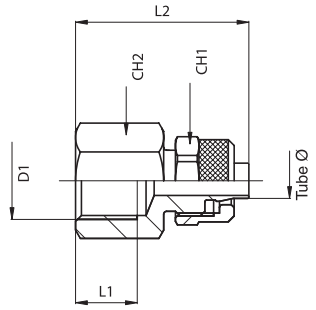

Female BSP stud

Code	Item	Tube ø	D_1	L_1	L_2	CH_1	CH_2
021062	C 13 05 18	5-3	1/8”	7,5	26	12	14
021063	C 13 06 18	6-4	1/8”	7,5	26	12	14
021064	C 13 06 14	6-4	1/4”	11	28,5	12	17
021065	C 13 08 18	8-6	1/8”	7,5	27	14	14
021066	C 13 08 14	8-6	1/4”	11	29,5	14	17
021067	C 13 08 38	8-6	3/8	11,5	30,5	14	20
021068	C 13 10 14	10-8	1/4”	11	31,5	16	17
021069	C 13 10 38	10-8	3/8”	11,5	32,5	16	20
021070	C 13 12 38	12-10	3/8”	11,5	34	19	20
021071	C 13 10 18	10-8	1/8”	7,5	29,5	16	14

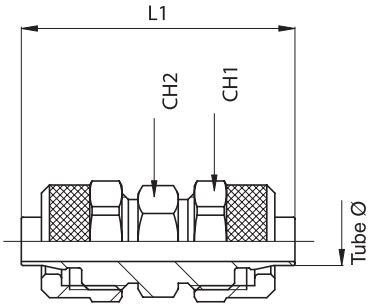

Union

Code	Item	Tube ø	L_1	CH_1	CH_2
021092	C 14 05 05	5-3	33	12	11
021093	C 14 06 06	6-4	33	12	11
021094	C 14 08 08	8-6	35	14	12
021095	C 14 10 10	10-8	39	16	14
021096	C 14 12 12	12-10	42	19	16
021097	C 14 15 15	15-12,5	47	22	22

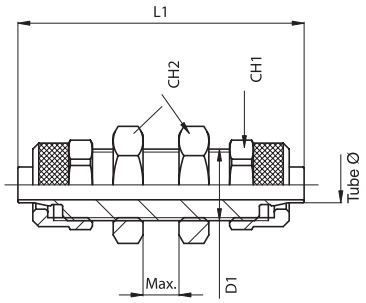

Bulkhead

Code	Item	Tube ø	D_1	L_1	max	CH_1	CH_2
021112	C 15 05 05	5-3	10x1	45	8	12	14
021113	C 15 06 06	6-4	10x1	45	8	12	14
021114	C 15 08 08	8-6	12x1	48	8	14	17
021115	C 15 10 10	10-8	14x1	50	7	16	17
021116	C 15 12 12	12-10	16x1	55	7	19	20
021117	C 15 15 15	15-12,5	20x1	58	5	22	24

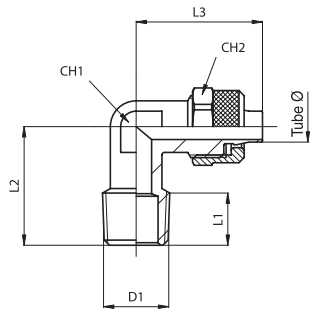

BSPT elbow

Code	Item	Tube ø	D_1	L_1	L_2	L_3	CH_1	CH_2
021146	C 16 04 M5	4-2,5	M5	5	15,5	20	9	7
021131	C 16 04 18	4-2,5	1/8”	7,5	17,5	20	9	7
021133	C 16 05 18	5-3	1/8”	7,5	17,5	22	9	12
021134	C 16 06 18	6-4	1/8”	7,5	17,5	22	9	12
021135	C 16 06 14	6-4	1/4”	11	21	22	9	12
021136	C 16 06 38	6-4	3/8”	11,5	24,5	24	12	12
021137	C 16 08 18	8-6	1/8”	7,5	20,5	24,5	12	14
021138	C 16 08 14	8-6	1/4”	11	24	24,5	12	14
021139	C 16 08 38	8-6	3/8”	11,5	24,5	24,5	12	14
021140	C 16 10 18	10-8	1/8”	7,5	21	27	12	16
021141	C 16 10 14	10-8	1/4”	11	24	27	12	16
021142	C 16 10 38	10-8	3/8”	11,5	24,5	27	12	16
021143	C 16 12 38	12-10	3/8”	11,5	26,5	30,5	14	19
021144	C 16 12 12	12-10	1/2”	14	30	34	17	19
021145	C 16 15 12	15-12,5	1/2”	14	30	35	17	22
021148	C 16 06 12x1,25	6-4	12x1,25	13	21	22	9	12
021149	C 16 06 12x1,5	6-4	12x1,5	13	21	22	9	12

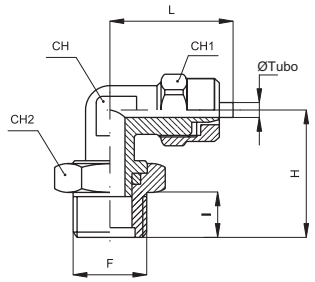

BSP elbow

Code	Item	Tube ø	F	I	H	L	CH	CH_1	CH_2
021171	C 40 06 18	6-4	1/8”	6	22,5	22,5	8	12	14
021172	C 40 06 14	6-4	1/4”	8	25	23,5	10	12	17
021173	C 40 08 18	8-6	1/8”	6	22,5	23,5	10	14	14
021174	C 40 08 14	8-6	1/4”	8	25	23,5	10	14	17
021175	C 40 10 14	10-8	1/4”	8	25,5	25,5	11	16	17
021176	C 40 06 M5	6-4	M5	5	22	22,5	8	12	8

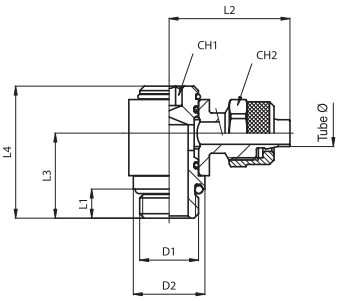

BSP elbow hex wrench

Code	Item	Tube ø	D_1	D_2	L_1	L_2	L_3	L_4	CH_1	CH_2
021441	C 30 06 18	6-4	1/8”	14	6	16	25	25	6	12
021442	C 30 06 14	6-4	1/4”	17	8	18,5	26,5	27,5	6	12
021443	C 30 08 18	8-6	1/8”	14	6	16	25	25	6	14
021444	C 30 08 14	8-6	1/4”	17	8	18,5	27,5	27,5	6	14
021445	C 30 10 14	10-8	1/4”	17	8	22	28,5	33	8	16
021446	C 30 10 38	10-8	3/8”	21	9	23,5	30,5	34,5	8	16
021447	C 30 12 38	12-10	3/8”	21	9	25,5	32	36,5	10	19

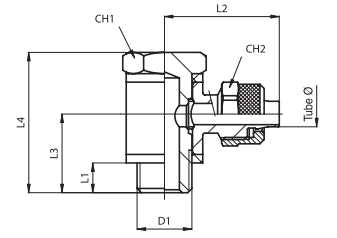

Single banjo elbow

Code	Item	Tube ø	D_1	L_1	L_2	L_3	L_4	CH_1	CH_2
021501	C 34 04 M5	4-2,5	M5	4	15,5	9,5	18,5	8	7
021502	C 34 04 18	4-2,5	1/8”	6	21	16,5	28	14	7
021503	C 34 05 M5	5-3	M5	4	17	9,5	18,5	8	8
021504	C 34 05 18	5-3	1/8”	6	25	16,5	28	14	8
021505	C 34 06 M5	6-4	M5	4	17	9,5	18,5	8	9
021506	C 34 06 18	6-4	1/8”	6	25	16,5	28	14	12
021507	C 34 06 14	6-4	1/4”	8	26,5	19,5	33	17	12
021508	C 34 08 18	8-6	1/8”	6	25	16,5	28	14	14
021509	C 34 08 14	8-6	1/4”	8	27,5	19,5	33	17	14
021510	C 34 08 38	8-6	3/8”	9	29,5	23,5	38	20	14
021511	C 34 10 14	10-8	1/4”	8	28,5	19,5	33	17	16
021512	C 34 10 38	10-8	3/8”	9	30,5	23,5	38	20	16
021513	C 34 10 12	10-8	1/2”	10	35,5	26,5	43	26	16
021514	C 34 12 38	12-10	3/8”	9	32	23,5	38	20	19
021515	C 34 12 12	12-10	1/2”	10	35	26,5	43	26	19
021516	C 34 15 12	15-12,5	1/2”	10	35	26,5	43	26	22

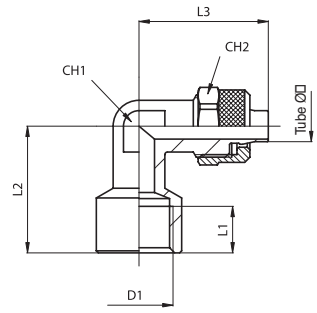

Female elbow

Code	Item	Tube ø	D_1	L_1	L_2	L_3	CH_1	CH_2
021161	C 17 05 18	5-3	1/8”	7,5	21	22	9	12
021162	C 17 06 18	6-4	1/8”	7,5	21	22	9	12
021163	C 17 06 14	6-4	1/4”	11	24,5	24	14	12
021164	C 17 08 18	8-6	1/8”	7,5	24	24,5	12	14
021165	C 17 08 14	8-6	1/4”	11	24,5	25	12	14
021166	C 17 10 14	10-8	1/4”	11	24,5	27	12	16
021167	C 17 12 38	12-10	3/8”	11,5	30	34	17	19

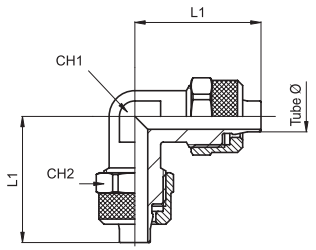

Equal elbow

Code	Item	Tube ø	L_1	L_1	CH_1	CH_2
021182	C 18 05 05	5-3	22	22	9	12
021183	C 18 06 06	6-4	22	22	9	12
021184	C 18 08 08	8-6	24,5	24,5	12	14
021185	C 18 10 10	10-8	27	27	12	16
021186	C 18 12 12	12-10	30,5	30,5	14	19
021187	C 18 15 15	15-12,5	35	35	17	22

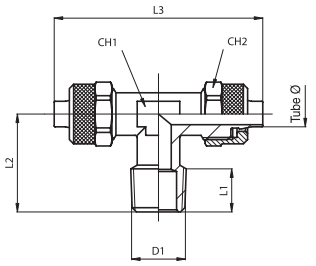

BSPT tee

Code	Item	Tube ø	D_1	L_1	L_2	L_3	CH_1	CH_2
021222	C 20 05 18	5-3	1/8”	7,5	17,5	44	9	12
021223	C 20 06 18	6-4	1/8”	7,5	17,5	44	9	12
021224	C 20 06 14	6-4	1/4”	11	21	44	9	12
021225	C 20 08 18	8-6	1/8”	7,5	20,5	49	12	14
021226	C 20 08 14	8-6	1/4”	11	24	49	12	14
021227	C 20 10 14	10-8	1/4”	11	24	54	12	16
021228	C 20 10 38	10-8	3/8”	11,5	24,5	54	12	16
021229	C 20 12 38	12-10	3/8”	11,5	26,5	61	14	19
021230	C 20 12 12	12-10	1/2”	14	30	68	17	19
021231	C 20 15 12	15-12,5	1/2”	14	30	70	17	22

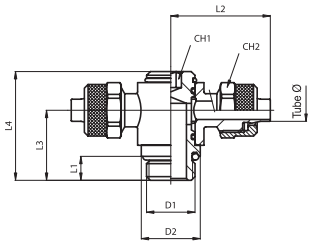

BSP swivel tee hex wrench

Code	Item	Tube ø	D_1	D_2	L_1	L_3	L_2	L_4	CH_1	CH_2
021461	C 31 06 18	6-4	1/8”	14	6	25	16	25	6	12
021462	C 31 06 14	6-4	1/4”	17	8	26,5	18,5	27,5	6	12
021463	C 31 08 18	8-6	1/8”	14	6	25	16	25	6	14
021464	C 31 08 14	8-6	1/4”	17	8	27,5	18,5	27,5	6	14
021465	C 31 10 14	10-8	1/4”	17	8	28,5	22	33	8	16
021466	C 31 10 38	10-8	3/8”	21	9	30,5	23,5	34,5	8	16
021467	C 31 12 38	12-10	3/8”	21	9	32	25,5	36,5	10	19
021468	C 31 12 12	12-10	1/2”	26	10	35	27,5	38,5	10	19

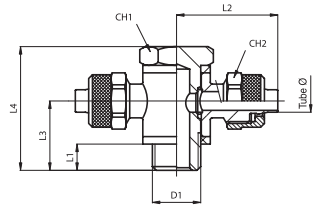

Single banjo tee

Code	Item	Tube ø	D_1	L_1	L_2	L_3	L_4	CH_1	CH_2
021546	C 36 05 M5	5-3	M5	4	17	9,5	18,5	8	8
021547	C 36 05 18	5-3	1/8”	6	25	16,5	28	14	12
021548	C 36 06 M5	6-4	M5	4	17	9,5	18,5	8	9
021549	C 36 06 18	6-4	1/8”	6	25	16,5	28	14	12
021550	C 36 06 14	6-4	1/4”	8	26,5	19,5	33	17	12
021551	C 36 08 18	8-6	1/8”	6	25	16,5	28	14	14
021552	C 36 08 14	8-6	1/4”	8	27,5	19,5	33	17	14
021553	C 36 08 38	8-6	3/8”	9	29,5	23,5	38	20	14
021554	C 36 10 14	10-8	1/4”	8	28,5	19,5	33	17	16
021555	C 36 10 38	10-8	3/8”	9	30,5	23,5	38	20	16
021556	C 36 10 12	10-8	1/2”	10	33,5	26,5	43	26	16
021557	C 36 12 38	12-10	3/8”	9	32	23,5	38	20	19
021558	C 36 12 12	12-10	1/2”	10	35	26,5	43	26	19
021559	C 36 15 12	15-12,5	1/2”	10	35	26,5	43	26	22

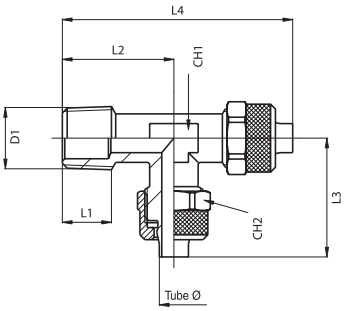

BSPT lateral tee

Code	Item	Tube ø	D_1	L_1	L_2	L_3	L_4	CH_1	CH_2
021252	C 21 05 18	5-3	1/8”	7,5	17,5	22	39,5	9	12
021253	C 21 06 18	6-4	1/8”	7,5	17,5	22	39,5	9	12
021254	C 21 06 14	6-4	1/4”	11	21	22	43	9	12
021255	C 21 08 18	8-6	1/8”	7,5	20,5	24,5	43	12	14
021256	C 21 08 14	8-6	1/4”	11	24	24,5	48,5	12	14
021257	C 21 10 14	10-8	1/4”	11	24	27	51	12	16
021258	C 21 10 38	10-8	3/8”	11,5	24,5	27	51,5	12	16
021259	C 21 12 38	12-10	3/8”	11,5	26,5	30,5	57	14	16
021260	C 21 12 12	12-10	1/2”	14	30	34	64	17	19
021261	C 21 15 12	15-12,5	1/2”	14	30	35	65	17	22

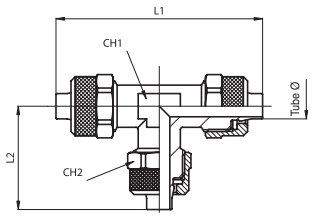

Equal tee

Code	Item	Tube ø	L_1	L_2	CH_1	CH_2
021202	C 19 05 05	5-3	44	22	9	12
021203	C 19 06 06	6-4	44	22	9	12
021204	C 19 08 08	8-6	49	24,5	12	14
021205	C 19 10 10	10-8	54	27	12	16
021206	C 19 12 12	12-10	61	30,5	14	19
021207	C 19 15 15	15-12,5	70	35	17	22

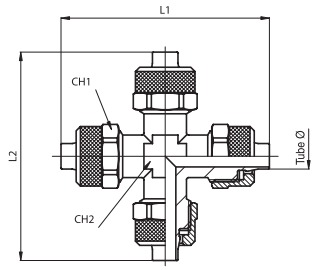

Equal +

Code	Item	Tube ø	L_1	L_2	CH_1	CH_2
021281	C 22 05 05	5-3	44	44	12	10
021282	C 22 06 06	6-4	44	44	12	10
021283	C 22 08 08	8-6	49	24,5	14	10
021284	C 22 10 10	10-8	54	49	16	12
021285	C 22 12 12	12-10	61	61	19	14
021286	C 22 15 15	15-12,5	70	70	22	17

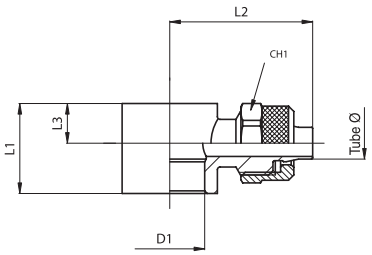

Single banjo *

Code	Item	Tube ø	D_1	L_1	L_2	L_3	CH_1
021317	C 23 04 M5	4-2,5	5,1	5	15,5	4,5	7
021318	C 23 04 18	4-2,5	10	9	21	6	7
021301	C 23 05 M5	5-3	5,1	10	17	4,5	8
021302	C 23 05 5R	5-3	7H7	10	17	4,5	8
021303	C 23 05 18	5-3	10	15	25	6	12
021304	C 23 06 M5	6-4	5,1	9	17	4,5	9
021305	C 23 06 5R	6-4	7H7	10	17	4,5	9
021306	C 23 06 18	6-4	10	15	25	6	12
021307	C 23 06 14	6-4	13,2	17	26,5	7,5	12
021308	C 23 08 18	8-6	10	15	25	6	14
021309	C 23 08 14	8-6	13,2	17	27,5	7,5	14
021310	C 23 08 38	8-6	17	20	29,5	7,5	14
021311	C 23 10 14	10-8	13,2	17	28,5	7,5	16
021312	C 23 10 38	10-8	17	20	30,5	7,5	16
021313	C 23 10 12	10-8	21	24	33,5	9,5	16
021314	C 23 12 38	12-10	17	20	32	7,5	19
021315	C 23 12 12	12-10	21	24	35	9,5	19
021316	C 23 15 12	15-12,5	21	24	36	9,5	22

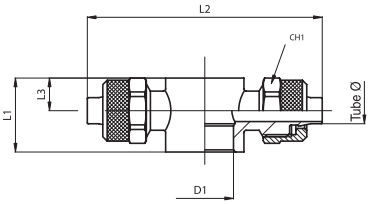

Double banjo *

Code	Item	Tube ø	D_1	L_1	L_2	L_3	CH_1
021331	C 24 05 05	5-3	5,1	9	34	4,5	8
021332	C 24 05 18	5-3	10	15	50	6	12
021333	C 24 06 05	6-4	5,1	9	34	4,5	9
021334	C 24 06 18	6-4	10	15	50	6	12
021335	C 24 06 14	6-4	13,2	17	53	7,5	12
021336	C 24 08 18	8-6	10	15	50	6	14
021337	C 24 08 14	8-6	13,2	17	55	7,5	14
021338	C 24 08 38	8-6	17	20	59	7,5	14
021339	C 24 10 14	10-8	13,2	17	57	7,5	16
021340	C 24 10 38	10-8	17	20	61	7,5	16
021341	C 24 10 12	10-8	21	24	67	9,5	16
021342	C 24 12 38	12-10	17	20	64	7,5	19
021343	C 24 12 12	12-10	21	24	70	9,5	19
021344	C 24 15 12	15-12,5	21	24	72	9,5	22

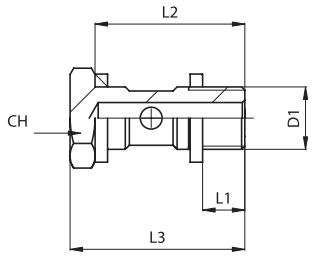

Single hollow bolt *

Code	Item	D_1	L_1	L_2	L_3	CH
020671	R 31 00 M5	M5	4	16	19	8
020672	R 31 00 18	1/8”	5	23	27	14
020673	R 31 00 14	1/4”	6,5	26,5	31,5	17
020674	R 31 00 38	3/8”	7	30	36	20
020675	R 31 00 12	1/2”	8,5	35,5	41,5	26

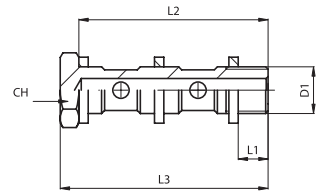

Double hollow bolt *

Code	Item	D_1	L_1	L_2	L_3	CH
020691	R 32 00 18	1/8”	5	39,5	42,5	14
020692	R 32 00 14	1/4”	6,5	45	50	17
020693	R 32 00 38	3/8”	7	51,5	57,5	20
020694	R 32 00 12	1/2”	8,5	61	67	26

*ATTENTION:

The coupling banjo/banjo bolt is only possible among:
C 23 - C 24 and R 31 - R32 - R 33
C 37 - C 38 and C 25 - C 26

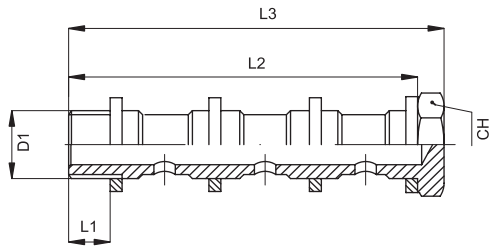

Triple hollow bolt *

Code	Item	D_1	L_1	L_2	L_3	CH
020711	R 33 00 18	1/8”	6	57	61	14
020712	R 33 00 14	1/4”	8	65	70	17
020713	R 33 00 38	3/8”	9	75	81	20

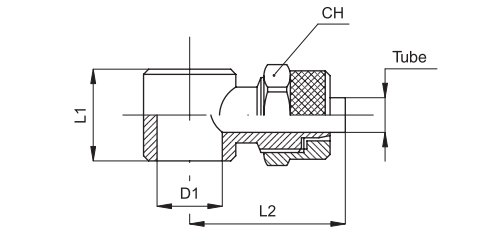

Single banjo *

Code	Item	Tube ø	D_1	L_1	L_2	CH
021321	C 37 05 M5	5-3	5,1	9	17	8
021322	C 37 05 18	5-3	9,8	14,5	22,5	8
021323	C 37 06 M5	6-4	5,1	9	18	9
021324	C 37 06 18	6-4	9,8	14,5	24	12
021325	C 37 06 14	6-4	13,2	14,5	26	12
021326	C 37 08 18	8-6	9,8	14,5	24	14
021327	C 37 08 14	8-6	13,2	14,5	26	14
021328	C 37 10 14	10-8	13,2	14,5	27,5	16

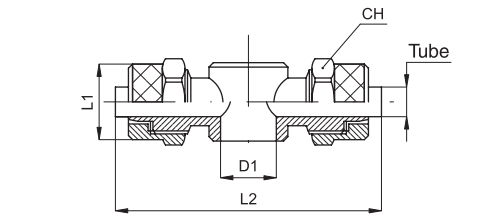

Double banjo *

Code	Item	Tube ø	D_1	L_1	L_2	CH
021351	C 38 05 18	5-3	9,8	14,5	45	8
021352	C 38 06 18	6-4	9,8	14,5	48	12
021353	C 38 06 14	6-4	13,2	14,5	52	12
021354	C 38 08 18	8-6	9,8	14,5	48	14
021355	C 38 08 14	8-6	13,2	14,5	53	14
021356	C 38 10 14	10-8	13,2	14,5	55	16

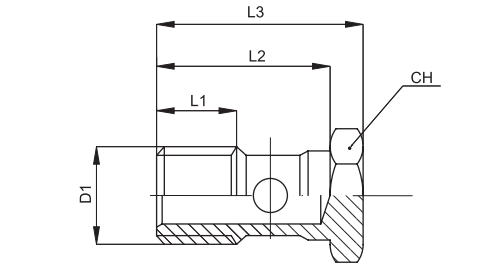

Single banjo bolt*

Code	Item	D_1	L_1	L_2	L_3	CH
020681	C 25 00 05	M5	4	14,5	18	8
020682	C 25 00 18	1/8”	8	23	27	14
020683	C 25 00 14	1/4”	11	25	29,5	17

*ATTENTION: The coupling banjo/banjo bolt is only possible among:
C 23 - C 24 and R 31 - R32 - R 33
C 37 - C 38 and C 25 - C 26

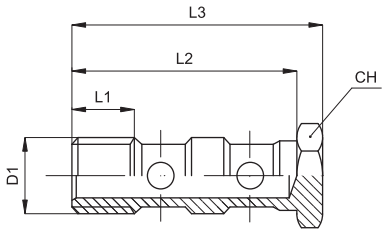

Double banjo bolt *

Code	Item	D_1	L_1	L_2	L_3	CH
020696	C 26 00 18	1/8”	8	39	43	14
020697	C 26 00 14	1/4”	11	41	45,5	17

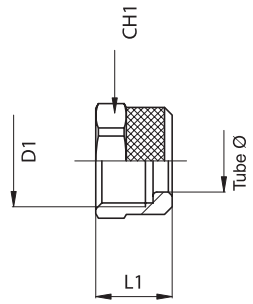

Nut *

Code	Item	Tube ø	D_1	L_1	CH_1
021409	C 27 04 07	4,10	M6x0,75	8	7
021401	C 27 05 08	5,10	M7x0,75	9	8
021402	C 27 06 08	6,10	M8x0,75	9	9
021404	C 27 06 10	6,10	M10x1	10	12
021405	C 27 08 12	8,15	M12x1	10	14
021406	C 27 10 14	10,25	M14x1	11	16
021407	C 27 12 16	12,30	M16x1	12	19
021408	C 27 15 20	15,30	M20x1	13	22

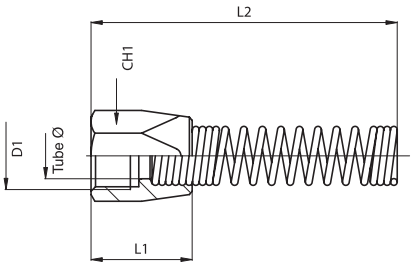

Nut with spring *

Code	Item	Tube ø	D_1	L_1	L_2	CH_1
021481	C 32 06 04	6-4	M10x1	17	87	12
021482	C 32 08 06	8-6	M12x1	18	98	14
021483	C 32 10 08	10-8	M14x1	21	110	16

*ATTENTION: The coupling banjo/banjo bolt is only possible among:
C 23 - C 24 and R 31 - R32 - R 33
C 37 - C 38 and C 25 - C 26

Notes

Compression fittings series O

In nickel plated brass

Version	Type
BSPT stud	O11
BSP stud	O12
Female BSPT stud	O13
Union	O14
Reducer	O26
BSP stem adapter	O24
Bulkhead	O15
BSPT elbow	O16
Female elbow	O27

Version	Type
Equal elbow	O17
BSPT tee	O19
BSPT lateral tee	O20
Equal tee	O18
Single banjo bolt	C25
Double banjo bolt	C26
Single banjo	O25
Nut	O21
Ogive	O22
Tube insert	O23

External tube ø (mm)	4	5	6	8	10	12	15
Code	04	05	06	08	10	12	15

Threads	1/8”	1/4”	3/8”	1/2”
Code	18	14	38	12



Series of compression fittings for brass tubes.
The ogive crushing onto the tube, by screwing down the external nut, allows to get a safe connection and to work even at high pressures.
The ogive is single cone.
The fittings seats, the ogives and the nuts are conforming to DIN 3870 - 3861 standards.
This series of fittings can also be used for connecting non-stiff tubes (rilsan, polyurethane, nylon etc.) and this by applying a tube insert inside the tube.
Available with threads Gas taper (BSPT) and Gas parallel (BSP).
For sealing washers (parallel threads) see page 4.65.41.

* How to order: O160618

O16	06	18
Type	Tube ø code	Tube or thread code

* For standard items, codes and dimensions see tables from page 4.25.2.

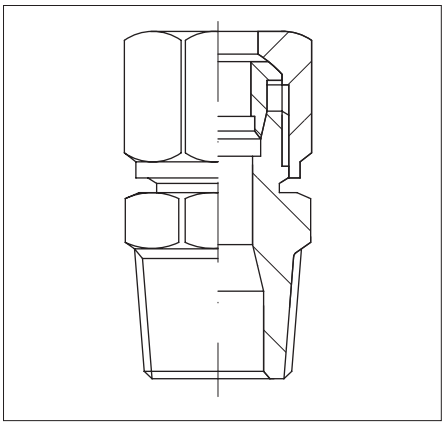

Technical data	
Fluid	Compressed air
Pressure	According to the tube used. Maximum 60 bar
Temperature	According to the tube used
Parallel threads	UNI - ISO 228 / 1 (BSP)
Taper threads	UNI - ISO 7 / 1 (BSPT)
Connection tubes	Metal or rilsan, nylon, polyurethane, polyethylene (with insert tube)
Materials	Body and nut: Nickel plated brass Ogive: Brass

Compression fittings series O

In nickel plated brass

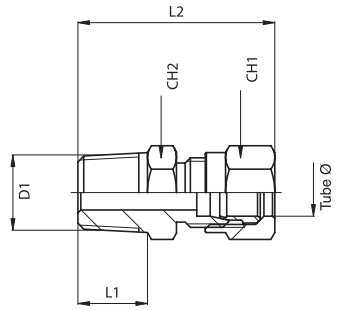

BSPT stud

Code	Item	Tube ø	D_1	L_1	L_2	CH_1	CH_2
021701	O 11 04 18	4	1/8”	8	27	10	10
021702	O 11 05 18	5	1/8”	8	28	12	11
021703	O 11 06 18	6	1/8”	8	28	12	12
021704	O 11 06 14	6	1/4”	11	33	12	14
021705	O 11 08 18	8	1/8”	8	30	14	12
021706	O 11 08 14	8	1/4”	11	33	14	14
021712	O 11 08 38	8	3/8”	12	33	14	17
021707	O 11 10 14	10	1/4”	11	37,5	19	17
021708	O 11 10 38	10	3/8”	11,5	38	19	17
021709	O 11 12 38	12	3/8”	11,5	39	22	19
021710	O 11 12 12	12	1/2”	14	41	22	22
021711	O 11 15 12	15	1/2”	14	44,5	27	22

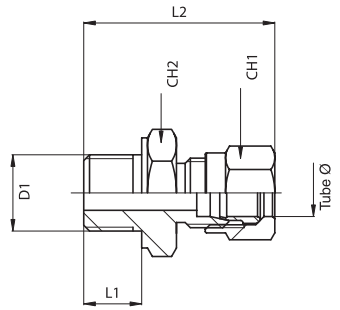

BSP stud

Code	Item	Tube ø	D_1	L_1	L_2	CH_1	CH_2
021742	O 12 04 M5	4	M5	5	26	10	9
021731	O 12 04 18	4	1/8”	6	25	10	14
021732	O 12 05 18	5	1/8”	8	29	12	14
021733	O 12 06 18	6	1/8”	6	26	12	14
021734	O 12 06 14	6	1/4”	8	29,5	12	17
021735	O 12 08 18	8	1/8”	6	26,5	14	14
021736	O 12 08 14	8	1/4”	8	30	14	17
021737	O 12 10 14	10	1/4”	8	34,5	19	17
021738	O 12 10 38	10	3/8”	9	36	19	19
021739	O 12 12 38	12	3/8”	10	39	22	22
021740	O 12 12 12	12	1/2”	12	42	22	27
021741	O 12 15 12	15	1/2”	12	43	27	27

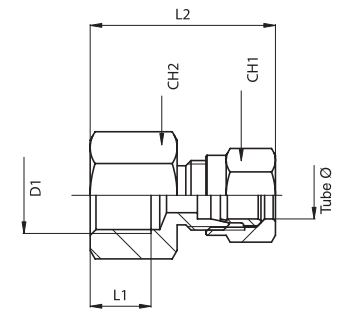

Female BSP stud

Code	Item	Tube ø	D_1	L_1	L_2	CH_1	CH_2
021761	O 13 04 18	4	1/8”	10	29	10	14
021762	O 13 05 18	5	1/8”	10	29	12	14
021763	O 13 06 18	6	1/8”	10	29	12	14
021764	O 13 06 14	6	1/4”	12	31	12	19
021765	O 13 08 18	8	1/8”	10	30	14	14
021766	O 13 08 14	8	1/4”	12	32	14	19
021767	O 13 10 14	10	1/4”	12	36	19	19
021768	O 13 10 38	10	3/8”	12	38	19	22

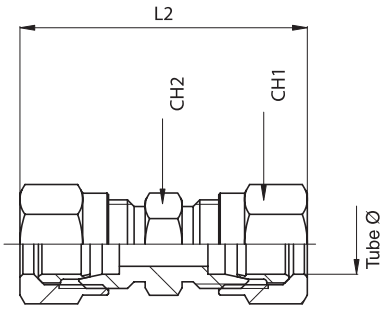

Union

Code	Item	Tube ø	L_2	CH_1	CH_2
021791	O 14 04 04	4	36	10	9
021792	O 14 05 05	5	36	12	11
021793	O 14 06 06	6	36	12	11
021794	O 14 08 08	8	38	14	12
021795	O 14 10 10	10	48	19	17
021796	O 14 12 12	12	50	22	19
021797	O 14 15 15	15	53	27	24

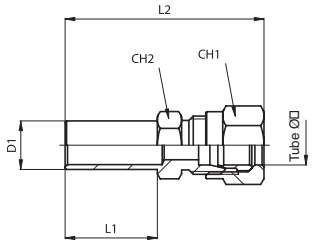

Reducer

Code	Item	Tube ø	D_1	L_1	L_2	CH_1	CH_2
022061	O 26 06 08	6	8	18	38	12	12
022062	O 26 06 10	6	10	19	39	12	12
022063	O 26 08 10	8	10	19	41	14	12
022064	O 26 08 12	8	12	19	41	14	14

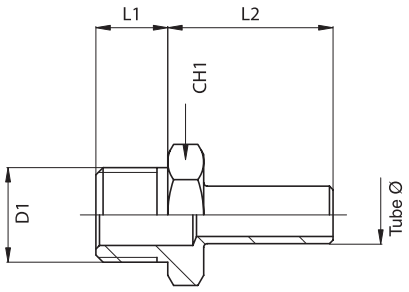

BSP stem adapter

Code	Item	Tube ø	D_1	L_1	L_2	CH_1
022041	O 24 04 18	4	1/8”	8	19	14
022042	O 24 05 18	5	1/8”	8	22	14
022043	O 24 06 18	6	1/8”	8	22	14
022044	O 24 06 14	6	1/4”	10	22	17
022045	O 24 08 18	8	1/8”	8	23	14
022046	O 24 08 14	8	1/4”	10	23	17
022047	O 24 10 14	10	1/4”	10	27	17
022048	O 24 10 38	10	3/8”	10	27	22
022049	O 24 12 38	12	3/8”	10	27	22
022050	O 24 12 12	12	1/2”	12	27	27

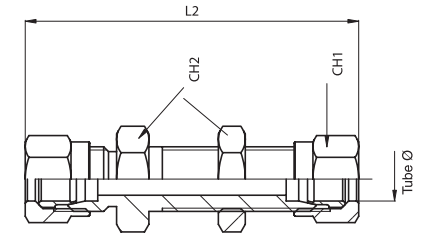

Bulkhead

Code	Item	Tube ø	L	CH_1	CH_2
021811	O 15 04 04	4	57	10	12
021812	O 15 05 05	5	60	12	14
021813	O 15 06 06	6	60	12	14
021814	O 15 08 08	8	62	14	17
021815	O 15 10 10	10	72	19	19
021816	O 15 12 12	12	75	22	22
021817	O 15 15 15	15	79	27	27

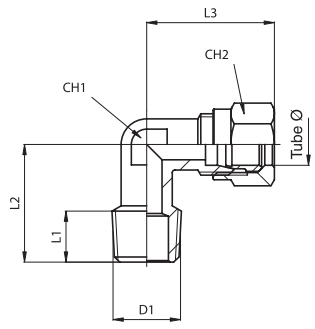

BSPT elbow

Code	Item	Tube ø	D_1	L_1	L_2	L_3	CH_1	CH_2
021831	O 16 04 18	4	1/8”	8	17	22	7	10
021832	O 16 05 18	5	1/8”	8	17	23	9	12
021833	O 16 06 18	6	1/8”	8	17	23	9	12
021834	O 16 06 14	6	1/4”	12	21	23	9	12
021835	O 16 08 18	8	1/8”	8	20	25	12	14
021836	O 16 08 14	8	1/4”	12	23	25	12	14
021837	O 16 10 14	10	1/4”	12	25	33	14	19
021838	O 16 10 38	10	3/8”	12	27	33	14	19
021839	O 16 12 38	12	3/8”	12	28	35	17	22
021840	O 16 12 12	12	1/2”	14	30	35	17	22
021841	O 16 15 12	15	1/2”	14	31	39	19	27

Compression fittings series O

In nickel plated brass

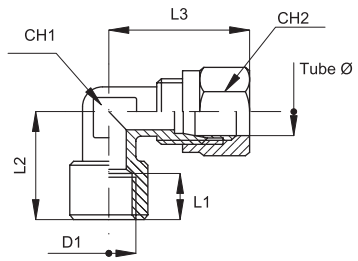

Female elbow

Code	Item	Tube ø	D_1	L_1	L_2	L_3	CH_1	CH_2
022071	O 27 04 18	4	1/8”	8	20	22	9	10
022072	O 27 06 18	6	1/8”	8	20	24,5	9	12
022073	O 27 06 14	6	1/4”	11	25,5	27	13	12
022074	O 27 08 18	8	1/8”	8	20	24	11	14
022075	O 27 08 14	8	1/4”	11	25,5	27,5	13	14

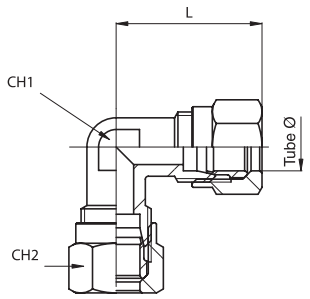

Equal elbow

Code	Item	Tube ø	L	CH_1	CH_2
021861	O 17 04 04	4	22	7	10
021862	O 17 05 05	5	23	9	12
021863	O 17 06 06	6	23	9	12
021864	O 17 08 08	8	25	12	14
021865	O 17 10 10	10	33	14	19
021866	O 17 12 12	12	35	17	22
021867	O 17 15 15	15	39	19	27

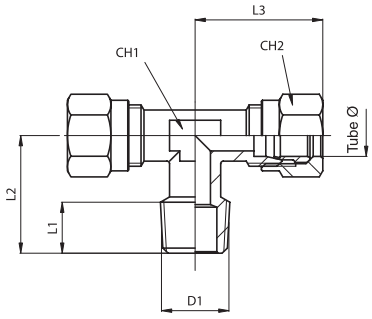

BSPT - compression tee

Code	Item	Tube ø	D_1	L_1	L_2	L_3	CH_1	CH_2
021911	O 19 04 18	4	1/8”	8	17	22	7	10
021912	O 19 05 18	5	1/8”	8	17	23	9	12
021913	O 19 06 18	6	1/8”	8	17	23	9	12
021914	O 19 06 14	6	1/4”	12	21	23	9	12
021915	O 19 08 18	8	1/8”	8	20	25	12	14
021916	O 19 08 14	8	1/4”	12	23	25	12	14
021917	O 19 10 14	10	1/4”	12	25	33	14	19
021918	O 19 10 38	10	3/8”	12	27	33	14	19
021919	O 19 12 38	12	3/8”	12	28	35	17	22
021920	O 19 12 12	12	1/2”	14	30	35	17	22
021921	O 19 15 12	15	1/2”	14	31	39	19	27

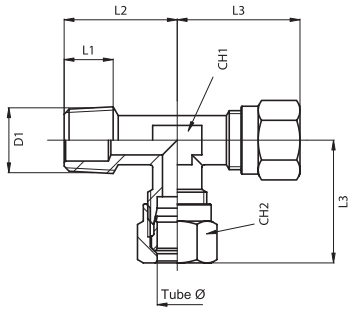

BSPT lateral tee

Code	Item	Tube ø	D_1	L_1	L_2	L_3	CH_1	CH_2
021941	O 20 04 18	4	1/8”	8	17	22	7	10
021942	O 20 05 18	5	1/8”	8	17	23	9	12
021943	O 20 06 18	6	1/8”	8	17	23	9	12
021944	O 20 06 14	6	1/4”	12	21	23	9	12
021945	O 20 08 18	8	1/8”	8	20	25	12	14
021946	O 20 08 14	8	1/4”	12	23	25	12	14
021947	O 20 10 14	10	1/4”	12	25	33	14	19
021948	O 20 10 38	10	3/8”	12	27	33	14	19
021949	O 20 12 38	12	3/8”	12	28	35	17	22
021950	O 20 12 12	12	1/2”	14	30	35	17	22
021951	O 20 15 12	15	1/2”	14	31	39	19	27

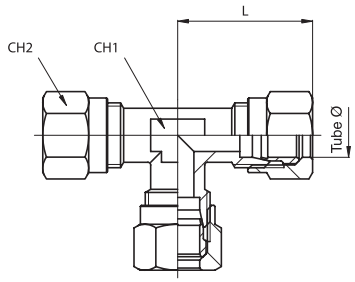

Equal tee

Code	Item	Tube ø	L	CH_1	CH_2
021881	O 18 04 04	4	22	7	10
021882	O 18 05 05	5	23	9	12
021883	O 18 06 06	6	23	9	12
021884	O 18 08 08	8	25	12	14
021885	O 18 10 10	10	33	14	19
021886	O 18 12 12	12	35	17	22
021887	O 18 15 15	15	39	19	27

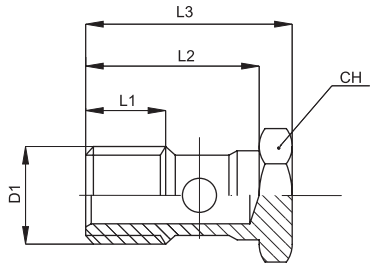

Single banjo bolt

Code	Item	D_1	L_1	L_2	L_3	CH
020682	C 25 00 18	1/8”	8	23	27	14
020683	C 25 00 14	1/4”	11	25	29,5	17

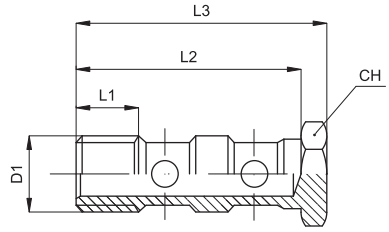

Double banjo bolt

Code	Item	D_1	L_1	L_2	L_3	CH
020296	C 26 00 18	1/8”	8	39	43	14
020297	C 26 00 14	1/4”	11	41	45,5	17

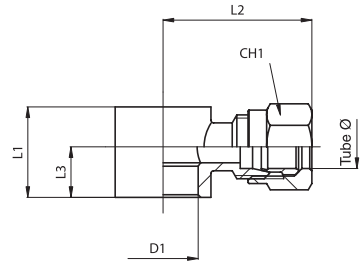

Single banjo

Code	Item	Tube ø	D_1	L_1	L_2	L_3	CH_1
022056	O 25 06 18	6	10	15	26	9	12
022057	O 25 06 14	6	13,2	17	28	9,5	12
022058	O 25 08 18	8	10	15	27	9	12
022059	O 25 08 14	8	13,2	17	29	9,5	14

Compression fittings series O

In nickel plated brass

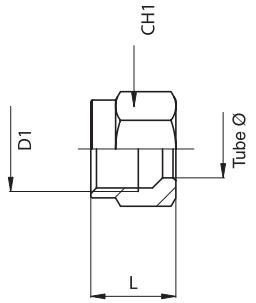

Nut

Code	Item	Tube ø	D_1	L	CH_1
021971	O 21 04 08	4	8x1	11	10
021972	O 21 05 10	5	10x1	11,5	12
021973	O 21 06 10	6	10x1	11,5	12
021974	O 21 08 12	8	12x1	12	14
021975	O 21 10 16	10	16x1,5	15,5	19
021976	O 21 12 18	12	18x1,5	15,5	22
021977	O 21 15 22	15	22x1,5	17	27

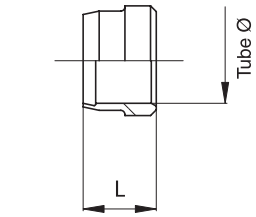

Ogive

Code	Item	Tube ø	L
021991	O 22 04 65	4	6,5
021992	O 22 05 75	5	7,5
021993	O 22 06 75	6	7,5
021994	O 22 08 75	8	7,5
021995	O 22 10 95	10	9,5
021996	O 22 12 95	12	9,5
021997	O 22 15 10	15	10

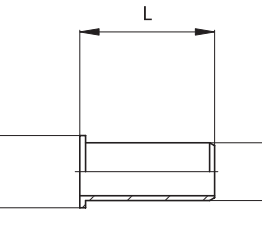

Tube insert

Code	Item	Tube ø	D_1	L
022011	O 23 06 12	6	4	12
022012	O 23 08 14	8	6	14
022013	O 23 10 16	10	8	16
022014	O 23 12 18	12	10	18
022015	O 23 15 20	15	12	20
022016	O 23 04 10	4	2,5	10

Standard fittings series A

In nickel plated brass

Version	Type
M-F BSP reducer	A001
M-F BSPT reducer	A002
M-F BSP stem increaser	A003
M-F BSPT stem increaser	A004
BSP nipple	A005
BSPT nipple	A006
M-F BSP extension	A039
Female socket	A007
Male BSP plug	A008
Male BSPT plug	A016
BSP plug	A009
Female plug	A010
Olive	A011
BSPT olive	A012
Nut	A013
M-F BSP reducer insert	A014

Version	Type
BSP - hose adapter	A015
Female bulkhead	A044
F-F elbow	A021
M-F elbow	A022
M-M elbow	A035
F-F-F tee	A023
F-M-F tee	A024
M-F-F tee	A025
M-F-M tee	A045
M-M-F tee	A027
M-M-M tee	A036
F-F-F Y	A040
F-M-F Y	A041
F-F-F-F +	A026
M-F-F-F +	A046
Female single banjo	A042
BSPT nipple union	A047



Series of standard fittings available in various configurations to adatpt the connections of every installation according to one's requirements.
With threads Gas taper (BSPT) and Gas parallel (BSP).
For sealing washers (parallel threads) see page 4.65.41.

* How to order: A0021214/S

A002	12	14	/S
Type	Thread	Thread	Option

* For standard items, codes and dimensions see tables from page 4.35.2.

Thread	M5	1/8"	1/4"	3/8"	1/2"	3/4"	1"
Code	M5	18	14	38	12	34	01

Options	Suffix
Special versions on request	/ S

4

Technical data	
Fluid	Compressed air
Pressure	60 bar
Parallel threads	UNI - ISO 228 / 1 (BSP)
Taper threads	UNI - ISO 7 / 1 (BSPT)
Metric threads	ISO R / 262
Materials	Nickel plated brass

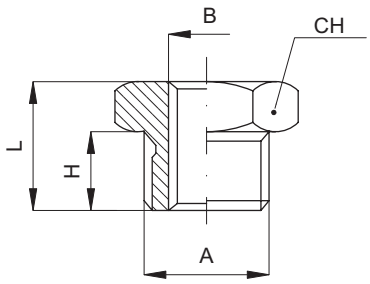

M-F BSP reducer

Code	Item	A	B	H	L	CH
022301	A001 18 05	1/8”	M5	6	10	14
022302	A001 14 18	1/4”	1/8”	8	13	17
022303	A001 38 18	3/8”	1/8”	9	14	19
022304	A001 38 14	3/8”	1/4”	9	14	19
022305	A001 12 14	1/2”	1/4”	9	15	24
022306	A001 12 38	1/2”	3/8”	9	15	24
022307	A001 34 14	3/4”	1/4”	11	17	30
022308	A001 34 38	3/4”	3/8”	11	17	30
022309	A001 34 12	3/4”	1/2”	11	17	30
022310	A001 01 38	1”	3/8”	12	19	36
022311	A001 01 12	1”	1/2”	12	19	36
022312	A001 01 34	1”	3/4”	12	19	36
022313	A001 12 18	1/2”	1/8”	9	15	24

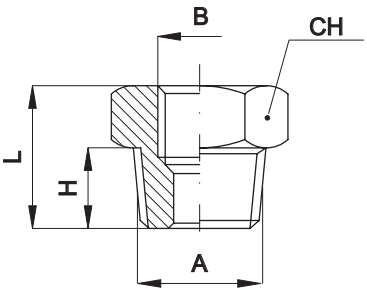

M-F BSPT reducer

Code	Item	A	B	H	L	CH
022331	A002 14 18	1/4”	1/8”	10	15	14
022332	A002 38 18	3/8”	1/8”	10	15	17
022333	A002 38 14	3/8”	1/4”	10	15	17
022334	A002 12 14	1/2”	1/4”	13	19	22
022335	A002 12 38	1/2”	3/8”	13	19	22
022336	A002 34 14	3/4”	1/4”	14	20,5	27
022337	A002 34 38	3/4”	3/8”	14	20,5	27
022338	A002 34 12	3/4”	1/2”	14	20,5	27
022339	A002 01 38	1”	3/8”	16	22	34
022340	A002 01 12	1”	1/2”	16	22	34
022341	A002 01 34	1”	3/4”	16	22	34
022342	A002 12 18	1/2”	1/8”	13	19	22

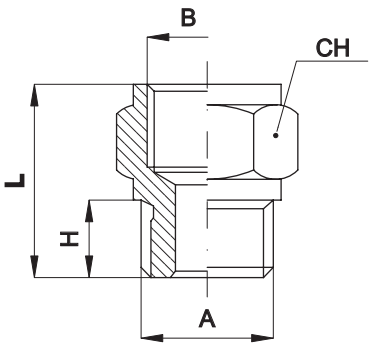

M-F BSP stem increaser

Code	Item	A	B	H	L	CH
022361	A003 05 05	M5	M5	4	11	8
022362	A003 05 18	M5	1/8”	4	14	14
022363	A003 18 18	1/8”	1/8”	6	16	14
022364	A003 18 14	1/8”	1/4”	6	19	17
022365	A003 18 38	1/8”	3/8”	6	20	22
022366	A003 14 14	1/4”	1/4”	8	21	17
022367	A003 14 38	1/4”	3/8”	8	21	22
022368	A003 14 12	1/4”	1/2”	8	24	27
022369	A003 38 38	3/8”	3/8”	9	23	22
022370	A003 38 12	3/8”	1/2”	9	25	27
022371	A003 12 12	1/2”	1/2”	10	26	27
022372	A003 38 34	3/8”	3/4”	9	26	32
022373	A003 12 34	1/2”	3/4”	10	27	32
022374	A003 34 34	3/4”	3/4”	11	28	32
022375	A003 12 01	1/2”	1”	10	29	38
022376	A003 34 01	3/4”	1”	11	30	38
022377	A003 01 01	1”	1”	12	31	38

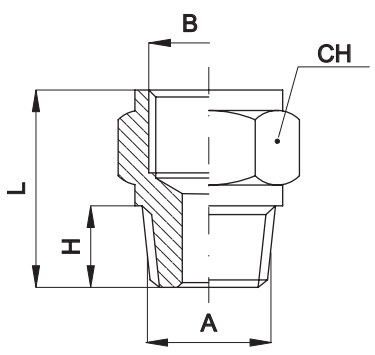

M-F BSPT stem increaser

Code	Item	A	B	H	L	CH
022391	A004 18 18	1/8”	1/8”	7,5	17,5	14
022392	A004 18 14	1/8”	1/4”	7,5	21	17
022393	A004 18 38	1/8”	3/8”	7,5	22	22
022394	A004 14 14	1/4”	1/4”	10	24	17
022395	A004 14 38	1/4”	3/8”	10	26	22
022396	A004 14 12	1/4”	1/2”	10	28	27
022397	A004 38 38	3/8”	3/8”	10	26	22
022398	A004 38 12	3/8”	1/2”	10	28	27
022399	A004 12 12	1/2”	1/2”	12	30	27
022400	A004 38 34	3/8”	3/4”	10	27	32
022401	A004 12 34	1/2”	3/4”	13	30	32
022402	A004 34 34	3/4”	3/4”	14	31	32
022403	A004 12 01	1/2”	1”	13	32	38
022404	A004 34 01	3/4”	1”	14	33	38
022405	A004 01 01	1”	1”	16	35	38

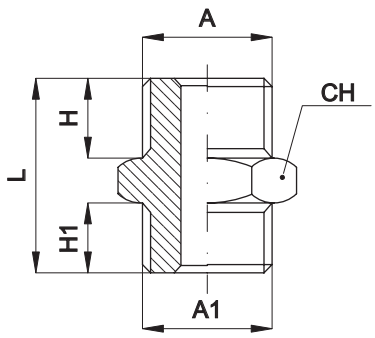

BSP nipple

Code	Item	A	A_1	H	H_1	L	CH
022421	A005 05 05	M5	M5	4	4	11	8
022422	A005 05 18	M5	1/8”	4	6	14	14
022423	A005 18 18	1/8”	1/8”	6	6	16,5	14
022424	A005 18 14	1/8”	1/4”	6	8	19	17
022425	A005 18 38	1/8”	3/8”	6	9	20	19
022426	A005 14 14	1/4”	1/4”	8	8	21	17
022427	A005 14 38	1/4”	3/8”	8	9	22	19
022428	A005 14 12	1/4”	1/2”	8	10	23,5	24
022429	A005 38 38	3/8”	3/8”	9	10	23	19
022430	A005 38 12	3/8”	1/2”	9	10	24,5	24
022431	A005 12 12	1/2”	1/2”	10	10	25,5	24
022432	A005 12 34	1/2”	3/4”	10	11	27	30
022433	A005 34 34	3/4”	3/4”	11	11	28	30
022434	A005 34 01	3/4”	1”	11	12	30	36
022435	A005 01 01	1”	1”	12	12	31	36

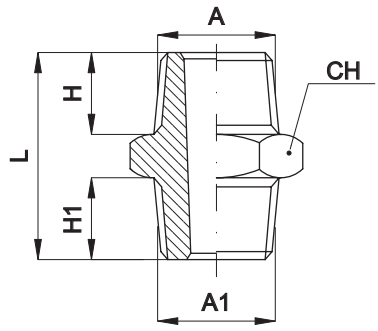

BSPT nipple

Code	Item	A	A_1	H	H_1	L	CH
022451	A006 18 18	1/8”	1/8”	7,5	7,5	19	12
022452	A006 18 14	1/8”	1/4”	7,5	10	22,5	14
022453	A006 18 38	1/8”	3/8”	7,5	10	22,5	17
022454	A006 14 14	1/4”	1/4”	10	10	25	14
022455	A006 14 38	1/4”	3/8”	10	10	25	17
022456	A006 14 12	1/4”	1/2”	10	12	28	22
022457	A006 38 38	3/8”	3/8”	10	10	25	17
022458	A006 38 12	3/8”	1/2”	10	12	28	22
022459	A006 12 12	1/2”	1/2”	12	12	30	22
022460	A006 12 34	1/2”	3/4”	12	14	32	27
022461	A006 34 34	3/4”	3/4”	14	14	34	27
022462	A006 34 01	3/4”	1”	14	16	37	34
022463	A006 01 01	1”	1”	16	16	39	34

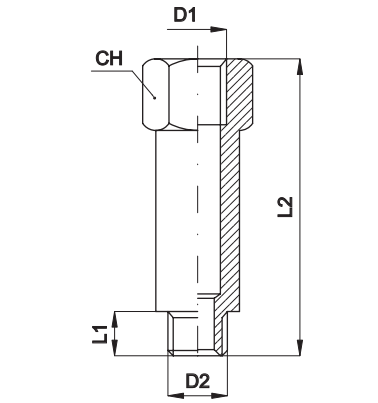

M-F BSP extension

Code	Item	D_1	D_1	L_1	L_2	CH
022821	A039 18 C23	1/8”	1/8”	6	23	12
022822	A039 18 L44	1/8”	1/8”	6	44	12
022823	A039 14 C28	1/4”	1/4”	8	28	16
022824	A039 14 L45	1/4”	1/4”	8	45	16
022825	A039 12 C36	1/2”	1/2”	9	36	24
022826	A039 14 L51	1/4”	1/4”	8	51	16
022827	A039 38 L41	3/8”	3/8”	9	41	22
022829	A039 34 L50	3/4”	3/4”	-	50	30
022830	A039 01 L50	1”	1”	-	50	38

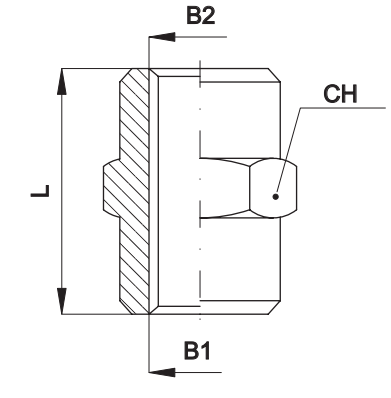

Female socket

Code	Item	B_1	B_2	L	CH
022481	A007 05 05	M5	M5	11	8
022482	A007 05 18	M5	1/8”	13	14
022483	A007 18 18	1/8”	1/8”	15	14
022484	A007 18 14	1/8”	1/4”	19	17
022485	A007 18 38	1/8”	3/8”	20	22
022486	A007 14 14	1/4”	1/4”	22	17
022487	A007 14 38	1/4”	3/8”	23	22
022488	A007 14 12	1/4”	1/2”	26	17
022489	A007 38 38	3/8”	3/8”	24	22
022490	A007 38 12	3/8”	1/2”	26	27
022491	A007 12 12	1/2”	1/2”	29	27
022492	A007 12 34	1/2”	3/4”	30	32
022493	A007 34 34	3/4”	3/4”	32	32
022494	A007 34 01	3/4”	1”	34	38
022495	A007 01 01	1”	1”	34	38

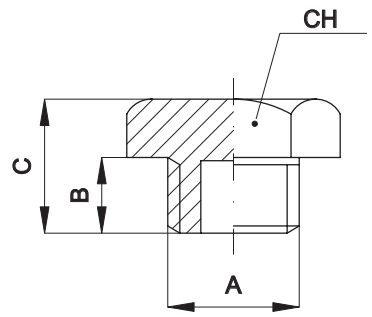

Male BSP plug

Code	Item	A	B	C	CH
022511	A008 18 18	1/8”	5	10	14
022512	A008 14 14	1/4”	8	12	17
022513	A008 38 38	3/8”	8	13	19
022514	A008 12 12	1/2”	8	13	24
022515	A008 34 34	3/4”	9	14	30
022516	A008 01 01	1”	11	18	36
022517	A008 05 05	5MA	3,5	6,5	8

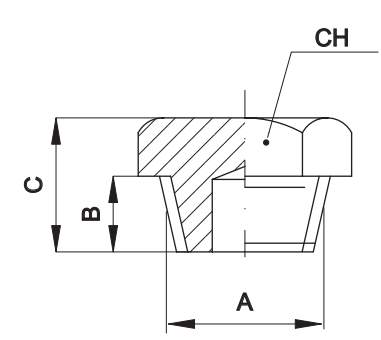

Male BSPT plug

Code	Item	A	B	C	CH
022471	A016 18 18	1/8”	5	10	14
022472	A016 14 14	1/4”	6	10	17
022473	A016 38 38	3/8”	8	13	19
022474	A016 12 12	1/2”	8	13	24
022475	A016 34 34	3/4”	9	14	30
022476	A016 01 01	1”	11	18	36

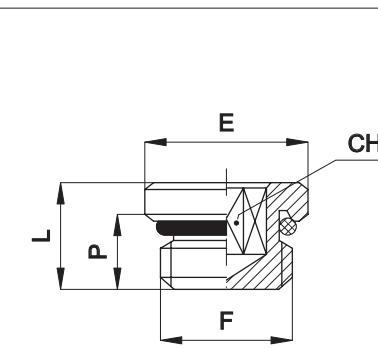

BSP plug

Code	Item	F	CH	P	L	E
022521	A009 05 05	M5	2,5	4,5	7,2	8
022522	A009 18 18	1/8”	5	6,5	9,5	14
022523	A009 14 14	1/4”	6	8	11,5	17
022524	A009 38 38	3/8”	8	9	12,5	20
022525	A009 12 12	1/2”	10	10	14	26

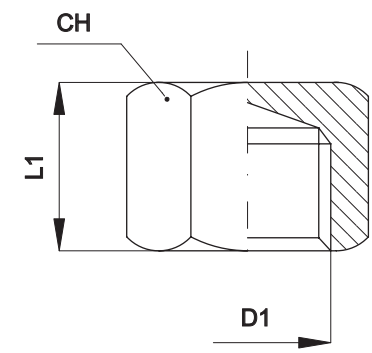

Female plug

Code	Item	D_1	L_1	CH
022531	A010 18 18	1/8”	11	14
022532	A010 14 14	1/4”	13	17
022533	A010 38 38	3/8”	14	20
022534	A010 12 12	1/2”	15	24
022535	A010 34 34	3/4”	16	30
022536	A010 01 01	1”	18	38
022537	A010 05 05	5MA	7	8

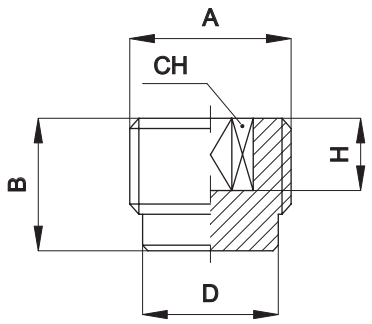

Olive

Code	Item	A	B	CH	D	H
022541	A011 18 18	1/8”	7,5	5	8	4
022542	A011 14 14	1/4”	10	6	11	6
022543	A011 38 38	3/8”	10	8	14	6
022544	A011 12 12	1/2”	11	10	18	7

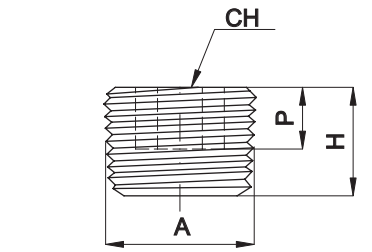

BSPT olive

Code	Item	A	H	P	CH
022546	A012 18 18	1/8”	7,5	4	5
022547	A012 14 14	1/4”	10	5	6
022548	A012 38 38	3/8”	10	6	8
022549	A012 12 12	1/2”	12	8	10

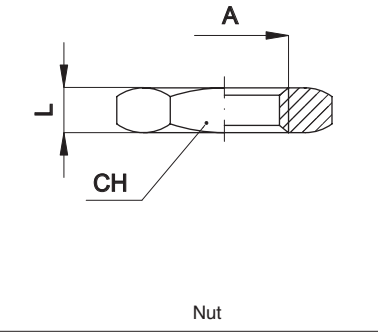

Nut

Code	Item	A	CH	L
022551	A013 18 18	1/8”	12	3
022552	A013 14 14	1/4”	16	3
022553	A013 38 38	3/8”	20	4
022554	A013 12 12	1/2”	24	4
022555	A013 34 34	3/4”	30	6
022556	A013 01 01	1”	36	8

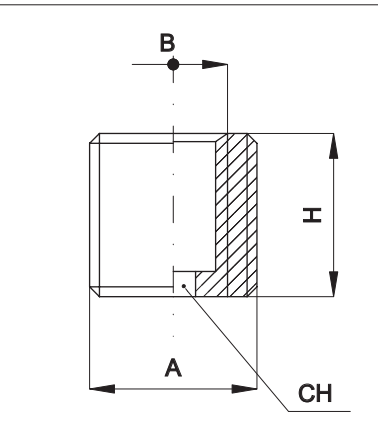

M-F BSP reducer insert

Code	Item	A	B	H	CH
022571	A014 18 05	1/8”	M5	6	3
022572	A014 14 18	1/4”	1/8”	7	6
022573	A014 38 18	3/8”	1/8”	9	6
022574	A014 38 14	3/8”	1/4”	9	8
022575	A014 12 14	1/2”	1/4”	10	8
022576	A014 12 38	1/2”	3/8”	10	10
022577	A014 34 12	3/4”	1/2”	12	14
022578	A014 01 34	1”	3/4”	14	16

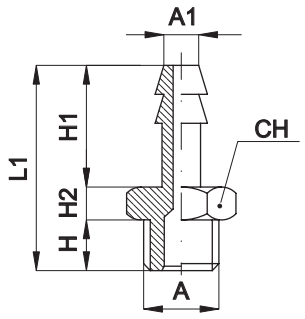

BSP - hose adapter

Code	Item	A	A_1	H	H_1	H_2	L	CH
022601	A015 18 07	1/8”	7	6	18	4	28	12
022602	A015 18 08	1/8”	8	6	18	4	28	12
022603	A015 18 09	1/8”	9	6	18	4	28	12
022604	A015 14 07	1/4”	7	8	18	4,5	30,5	17
022605	A015 14 08	1/4”	8	8	18	4,5	30,5	17
022606	A015 14 09	1/4”	9	8	18	4,5	30,5	17
022607	A015 14 12	1/4”	12	8	18	4,5	30,5	17
022608	A015 38 09	3/8”	9	9	18	5	32	19
022609	A015 38 12	3/8”	12	9	18	5	32	19
022610	A015 38 17	3/8”	17	9	18	5	32	19
022611	A015 12 12	1/2”	12	10	18	6	34	24
022612	A015 12 17	1/2”	17	10	18	6	34	24

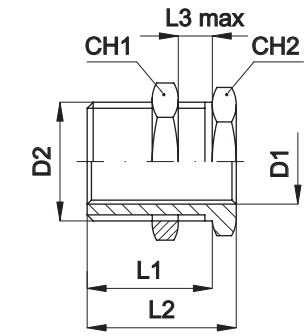

Female bulkhead

Code	Item	D_1	D_2	L_1	L_2	L_3	CH_1	CH_2
022881	A044 05 05	M5	M10x1	9,5	13	6	14	14
022882	A044 18 18	1/8”	M16x1,5	15	19	10	22	19
022883	A044 14 14	1/4”	M20x1,5	19	23	14	27	24
022884	A044 38 38	3/8”	M26x1,5	22	27	16	32	30
022885	A044 12 12	1/2”	M28x1,5	28	34	21	36	32

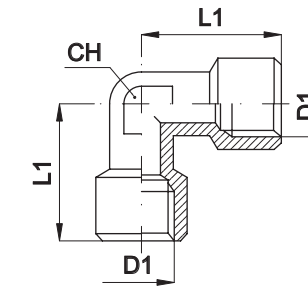

F-F elbow

Code	Item	D_1	L_1	CH
022711	A021 18 18	1/8”	21	12
022712	A021 14 14	1/4”	26	13
022713	A021 38 38	3/8”	30	17
022714	A021 12 12	1/2”	34	21
022715	A021 34 34	3/4”	36,5	-
022716	A021 01 01	1”	45	-
022717	A021 05 05	M5	11	9

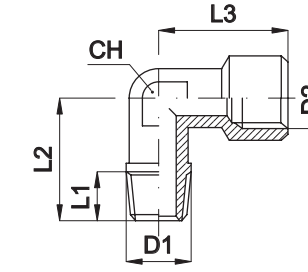

M-F elbow

Code	Item	D_1	D_2	L_1	L_2	L_3	CH
022731	A022 18 18	1/8”	1/8”	7,5	18	21	12
022732	A022 14 14	1/4”	1/4”	11	25	26	13
022733	A022 38 38	3/8”	3/8”	11,5	28	30	17
022734	A022 12 12	1/2”	1/2”	14	30	34	21
022735	A022 34 34	3/4”	3/4”	14,5	32	36,5	-
022736	A022 01 01	1”	1”	16,8	39	45	-
022737	A022 05 05	M5	M5	4	11,5	11	9
022738	A022 18 14	1/8”	1/4”	7,5	18	26	13

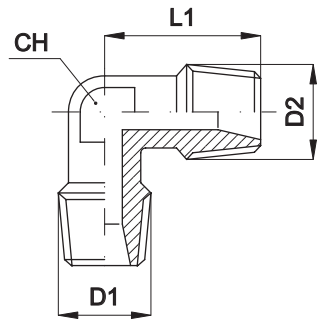

M-M elbow

Code	Item	D_1	D_2	L_1	CH
022781	A035 18 18	1/8”	1/8”	18	9
022782	A035 14 14	1/4”	1/4”	22	12
022783	A035 38 38	3/8”	3/8”	26	14
022784	A035 12 12	1/2”	1/2”	30	17
022785	A035 34 34	3/4”	3/4”	32	-
022786	A035 01 01	1”	1”	39	-
022787	A035 05 05	M5	M5	11,5	9
022810	A035 18 14	1/8”	1/4”	18	12

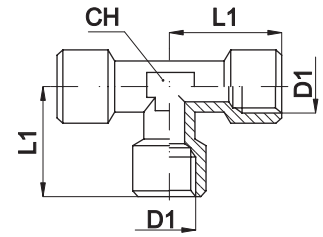

F-F-F tee

Code	Item	D_1	L_1	CH
022741	A023 18 18	1/8”	21	12
022742	A023 14 14	1/4”	26	13
022743	A023 38 38	3/8”	30	17
022744	A023 12 12	1/2”	34	21
022745	A023 34 34	3/4”	36,5	-
022746	A023 01 01	1”	45	-
022747	A023 05 05	M5	11	9

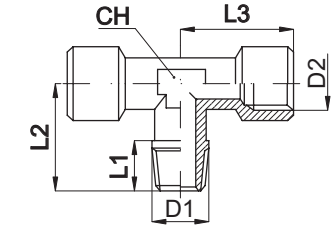

F-M-F tee

Code	Item	D_1	D_2	L_1	L_2	L_3	CH
022751	A024 18 18	1/8”	1/8”	7,5	18	21	12
022752	A024 14 14	1/4”	1/4”	11	25	26	13
022753	A024 38 38	3/8”	3/8”	11,5	28	30	17
022754	A024 12 12	1/2”	1/2”	14	30	34	21
022755	A024 34 34	3/4”	3/4”	14,5	32	-	-
022756	A024 01 01	1”	1”	16,8	39	-	-
022757	A024 05 05	M5	M5	4	11,5	11	9

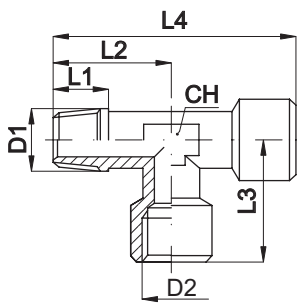

M-F-F tee

Code	Item	D_1	D_2	L_1	L_2	L_3	L_4	CH
022761	A025 18 18	1/8”	1/8”	7,5	18	21	39,5	12
022762	A025 14 14	1/4”	1/4”	11	25	26	48,5	13
022763	A025 38 38	3/8”	3/8”	11,5	28	30	53,5	17
022764	A025 12 12	1/2”	1/2”	14	30	34	63	21
022765	A025 34 34	3/4”	3/4”	14,5	-	36,5	68,5	-
022766	A025 01 01	1”	1”	16,5	-	45	84	-
022767	A025 05 05	M5	M5	4	11,5	11	22	9

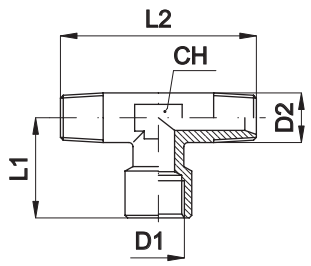

M-F-M tee

Code	Item	D_1	D_2	L_1	L_2	L_3	CH
022901	A045 18 18	1/8”	1/8”	7,5	21	36	9
022902	A045 14 14	1/4”	1/4”	11	26	44	12
022903	A045 38 38	3/8”	3/8”	11,5	27	51	-
022904	A045 12 12	1/2”	1/2”	14	32	59	-
022905	A045 34 34	3/4”	3/4”	14,5	36,5	64	-
022906	A045 01 01	1”	1”	16,5	45	78	-

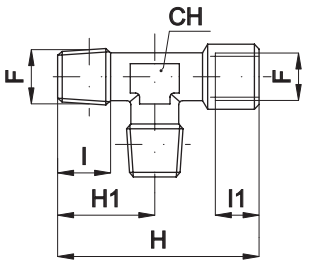

M-M-F tee

Code	Item	F	F_1	I	I_1	H	H_1	L	CH
022815	A027 18 18	1/8”	1/8”	8	8	39,5	18,5	18,5	10
022816	A027 14 14	1/4”	1/4”	11	11	49	23,5	23,5	13
022817	A027 38 38	3/8”	3/8”	11,5	11,5	54	26	26	17
022818	A027 12 12	1/2”	1/2”	14	14	64,5	31	31	21
022819	A027 34 34	3/4”	3/4”	14,5	68,5	68,5	36,5	36,5	-

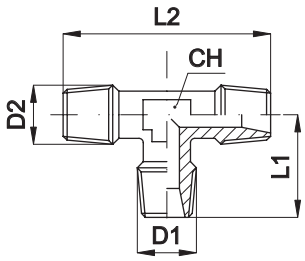

M-M-M tee

Code	Item	D_1	D_2	L_1	L_2	CH
022801	A036 18 18	1/8”	1/8”	18	36	9
022802	A036 14 14	1/4”	1/4”	22	44	12
022803	A036 38 38	3/8”	3/8”	26	52	15
022804	A036 12 12	1/2”	1/2”	30	60	17
022805	A036 34 34	3/4”	3/4”	32	64	-
022806	A036 01 01	1”	1”	39	78	-

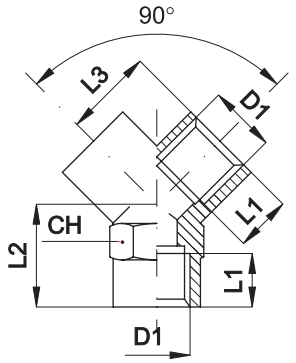

F-F-F Y

Code	Item	D_1	L_1	L_2	L_3	CH
022841	A040 18 18	1/8”	8	12	14	13
022842	A040 14 14	1/4”	11	14	17	17
022843	A040 38 38	3/8”	11,5	16	19	20
022844	A040 12 12	1/2”	14	19	24,5	25

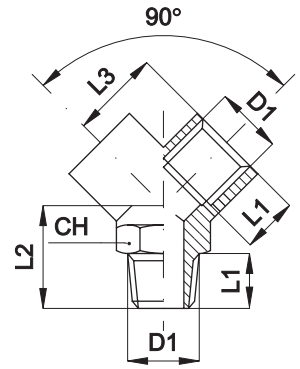

F-M-F Y

Code	Item	D_1	L_1	L_2	L_3	CH
022861	A041 18 18	1/8”	8	16	14	13
022862	A041 14 14	1/4”	11	20	17	17
022863	A041 38 38	3/8”	11,5	22	19	20
022864	A041 12 12	1/2”	14	27	24,5	25

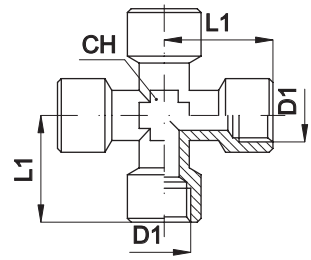

F-F-F-F +

Code	Item	D_1	L_1	CH
022771	A026 18 18	1/8”	21	12
022772	A026 14 14	1/4”	26	13
022773	A026 38 38	3/8”	30	17
022774	A026 12 12	1/2”	34	-

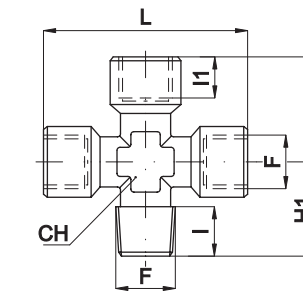

M-F-F-F +

Code	Item	F	F_1	I	I_1	H	H_1	L	CH
022891	A046 18 18	1/8”	1/8”	8	8	39,5	18,5	42	10
022892	A046 14 14	1/4”	1/4”	11	11	49	23,5	51	13
022893	A046 38 38	3/8”	3/8”	11,5	11,5	54	26	56	17
022894	A046 12 12	1/2”	1/2”	14	14	64,5	31	67	21

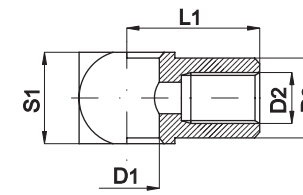

Female single banjo

Code	Item	D_1	D_2	D_3	L_1	S_1
022875	A042 05 05	5,1	M5	9	11	10
022871	A042 18 18	10	1/8”	14	17	15
022872	A042 14 14	13,2	1/4”	17	22	18
022873	A042 38 38	17	3/8”	20	26	20

For banjo bolts see page 4.2.8

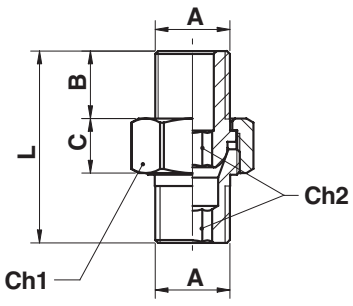

BSPT nipple union

Code	Item	A	B	C	L	CH_1	CH_2
023471	A047 18 18	1/8”	9	8,5	27	15	5
023472	A047 14 14	1/4”	12	9,5	33,5	19	6
023473	A047 38 38	3/8”	13	10,2	36,5	22	8
023474	A047 12 12	1/2”	16	12	44	27	12
023475	A047 34 34	3/4	18	17	53	36	14
023476	A047 01 01	1”	22	20	64	46	19

Version	Type
Coupling with male metric thread DIN 13	20KAAM
Coupling with male BSP parallel thread ISO 228	20KAAW
Coupling with female metric thread DIN 13	20KAIM
Coupling with female BSP parallel thread ISO 228	20KAIW
Coupling with hose adapter	20KATF
Coupling with rapid fitting	20KAKO
Coupling with bulkhead rapid fitting	20KAKS
Coupling with bulkhead hose adapter	20KATS
Plug with hose adapter	20SFTF
Plug with rapid fitting	20SFKO
Plug with bulkhead rapid fitting	20SFKS
Plug with bulkhead hose adapter	20SFTS
Plug with male metric thread DIN 13	20SFAM
Plug with male BSP parallel thread ISO 228	20SFAW
Plug with female metric thread DIN 13	20SFIM
Plug with female BSP parallel thread ISO 228	20SFIW

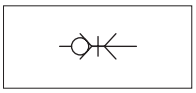



Series of quick-lock couplings single shut off (only on the coupling), standard in brass (not nickel plated).
The quick-lock couplings series 20, whose dimensions are very small, can be used in various fields (chemical, medical, etc.).
The connection tightness between the coupling and the plug is guaranteed by a series of spheres and this allows a longer life time even when the connections and the disconnections are frequent.

For standard items, codes and dimensions see tables from page 4.45.2.

On request these couplings can be supplied (special executions):
- Double shut off
- With coupler body completely in stainless steel AISI 303 or AISI 316.
- With special seals (FKM or EPDM).
- Nickel plated (standard or chemical nickel plating)
- Without shut off valves

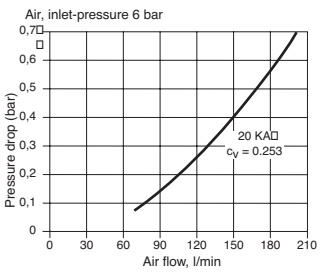

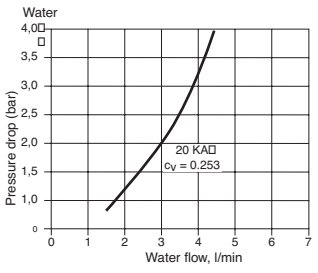

4

Technical data	
Fluid	Compressed air, water, non-aggressive fluids
Pressure	35 bar (Vacuum resistance: 750 mm.Hg)
Temperature range	-20 °C ÷ 100 °C
Parallel threads	UNI - ISO 228/1 (BSP)
Metric threads	DIN 13
Materials	Coupler body, valve, releasing sleeve: Brass OT 58 Springs and elastic ring: Stainless steel AISI 301 Balls: Stainless steel AISI 420 Seals: Nitrile rubber (NBR)

Quick-lock couplings

Series 20, DN 2,7 = 6 mm²

In brass

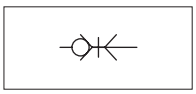

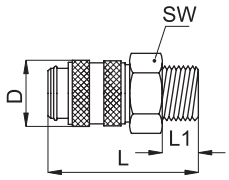

Coupling with male thread

Code	Item	Thread	SW	L	D	L_1
570002	20KA AM05 MPX	M5	9	26	10	5
570015	20KA AW10 MPX	G 1/8”	11	28	10	7

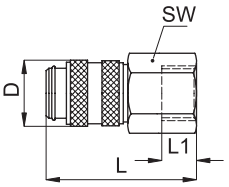

Coupling with female thread

Code	Item	Thread	SW	L	D	L_1
570016	20KA IM05 MPX	M5	9	26	10	5
570017	20KA IW10 MPX	G 1/8”	12	28	10	7

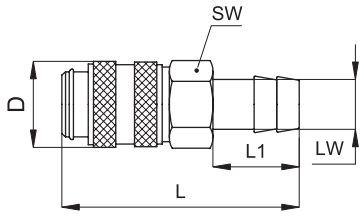

Coupling with hose adapter

Code	Item	LW	SW	L	D	L_1
570018	20KA TF03 MPX	3	12	35	10	13
570019	20KA TF04 MPX	4	12	35	10	13
570020	20KA TF05 MPX	5	12	35	10	13

LW = Tube internal ø

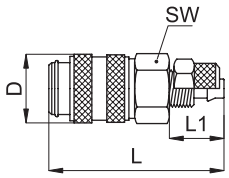

Coupling with rapid fitting

Code	Item	Tube ø	SW	L	D	L_1	G
570021	20KA KO04 MPX	4	12	34	10	12	M7x0,5
570022	20KA KO05 MPX	5	12	34	10	12	M7x0,5
570023	20KA KO06 MPX	6	12	34	10	12	M8x0,5

Tube ø = Tube external ø

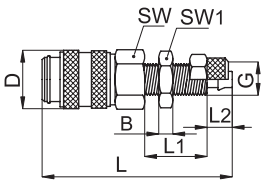

Coupling with bulkhead rapid fitting

Code	Item	Tube ø	SW	L	D	L_1	L_2	SW_1	B	G
570024	20KA KS04 MPX	4	12	45	10	17	7	11	3	M7x0,5
570025	20KA KS05 MPX	5	12	45	10	17	7	11	3	M7x0,5
570026	20KA KS06 MPX	6	12	45	10	17	7	12	3,5	M8x0,5

Tube ø = Tube external ø

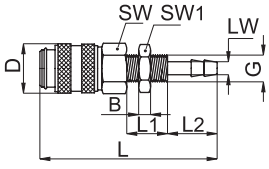

Coupling with bulkhead hose adapter

Code	Item	LW	SW	L	D	L_1	L_2	SW_1	B	G
570027	20KA TS03 MPX	3	12	51	10	17	13	11	3	M7x0,5
570028	20KA TS04 MPX	4	12	51	10	17	13	11	3	M7x0,5

LW = Tube internal ø

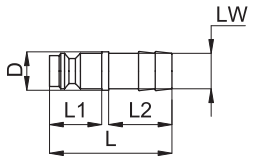

Plug with hose adapter

Code	Item	LW	L	D	L_1	L_2
570029	20SF TF03 MXX	3	24	7	10	13
570030	20SF TF04 MXX	4	24	7	10	13
570031	20SF TF05 MXX	5	24	9	8,5	12,5

LW = Tube internal ø

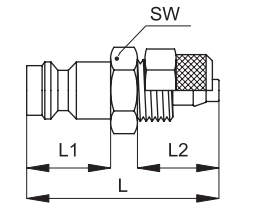

Plug with rapid fitting

Code	Item	Tube ø	SW	L	L_1	L_2
570003	20SF KO04 MXX	4	7	25	10	12
570032	20SF KO05 MXX	5	7	25	10	12
570033	20SF KO06 MXX	6	8	25	10	12

Tube ø = Tube external ø

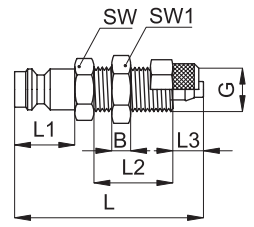

Plug with bulkhead rapid fitting

Code	Item	Tube ø	SW	L	L_1	L_2	L_3	SW_1	B	G
570034	20SF KS04 MXX	4	11	38	10	17	7	11	3	M7x0,5
570035	20SF KS05 MXX	5	11	38	10	17	7	11	3	M7x0,5
570036	20SF KS06 MXX	6	12	38	10	17	7	12	3,5	M8x0,5

Tube ø = Tube external ø

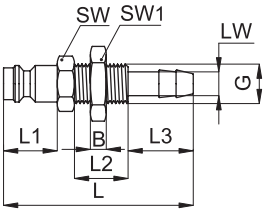

Plug with bulkhead hose adapter

Code	Item	LW	SW	L	L_1	L_2	L_3	SW_1	B	G
570037	20SF TS03 MXX	3	11	44	10	17	13	11	3	M7x0,5
570038	20SF TS04 MXX	4	11	44	10	17	13	11	3	M7x0,5

LW = Tube internal ø

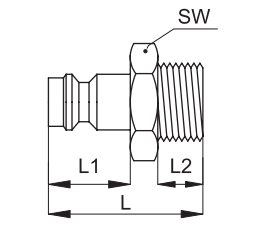

Plug with male thread

Code	Item	Thread	SW	L	L_1	L_2
570039	20SF AM05 MXX	M5	7	18	10	5
570040	20SF AW10 MXX	G 1/8”	11	20	10	7

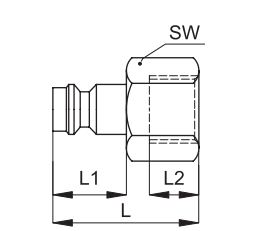

Plug with female thread

Code	Item	Thread	SW	L	L_1	L_2
570041	20SF IM05 MXX	M5	7	17	10	5
570042	20SF IW10 MXX	G 1/8”	12	19	10	7

Quick-lock couplings

Series 21, DN 5 = 20 mm² **In brass**

Version	Type
Coupling with male metric thread DIN 2353	21KAAD
Coupling with male BSP parallel thread ISO 228	21KAAW
Coupling with female metric thread DIN 13	21KAIM
Coupling with female BSP parallel thread ISO 228	21KAIW
Coupling with hose adapter	21KATF
Coupling with rapid fitting	21KAKO
Coupling with bulkhead rapid fitting	21KAKS
Coupling with bulkhead hose adapter	21KATS
Coupling with rapid fitting and anti-deflection spring	21KAKK
Plug with hose adapter	21SFTF
Plug with rapid fitting	21SFKO
Plug with bulkhead rapid fitting	21SFKS
Plug with bulkhead hose adapter	21SFTS
Plug with rapid fitting and anti-deflection spring	21SFKK
Plug with male metric thread DIN 2353	21SFAD
Plug with male BSP parallel thread ISO 228	21SFAW
Plug with female metric thread DIN 13	21SFIM
Plug with female BSP parallel thread ISO 228	21SFIW

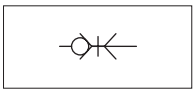



Series of quick-lock couplings single shut off (only on the coupling), standard in brass (not nickel plated).
The quick-lock couplings series 21, in general the most common as to dimensions, can be used in various fields.
The connection tightness between the coupling and the plug is guaranteed by a series of spheres and this allows a longer life time even when the connections and the disconnections are frequent.

For standard items, codes and dimensions see tables from page 4.45.12.

On request these couplings can be supplied (special executions):
- Double shut off
- With coupler body completely in stainless steel AISI 303 or AISI 316.
- With special seals (FKM or EPDM).
- Nickel plated (standard or chemical nickel plating)
- Without shut off valves

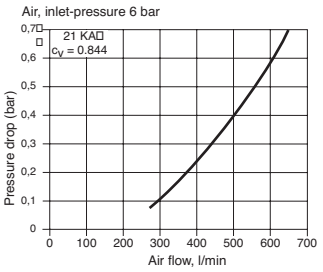

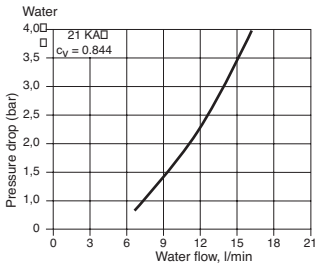

Technical data		
Fluid	Compressed air, water, non-aggressive fluids	
Pressure	35 bar (Vacuum resistance: 750 mm.Hg)	
Temperature range	-20 °C ÷ 100 °C	
Parallel threads	UNI - ISO 228/1 (BSP)	
Metric threads	DIN 13 - DIN 2353	
Materials	Coupler body, valve, releasing sleeve:	Brass OT 58
	Springs and elastic ring:	Stainless steel AISI 301
	Balls:	Stainless steel AISI 420
	Seals:	Nitrile rubber (NBR)

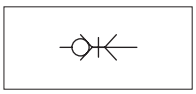

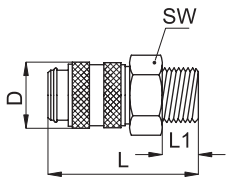

Coupling with male threa

Code	Item	Thread	SW	L	D	L_1
570043	21KA AW10 MPX	1/8”	14	36	16	7
570044	21KA AW13 MPX	1/4”	17	38	16	9
570045	21KA AW17 MPX	3/8”	19	38	16	9
570046	21KA AD12 MPX	M12x1,5	17	39	16	10
570047	21KA AD14 MPX	M14x1,5	17	39	16	10

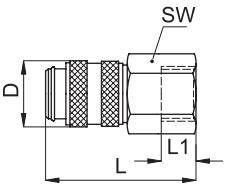

Coupling with female thread

Code	Item	Thread	SW	L	D	L_1
570048	21KA IW10 MPX	1/8”	14	36	16	9
570049	21KA IW13 MPX	1/4”	17	38	16	9
570050	21KA IW17 MPX	3/8”	19	38	16	7
570051	21KA IM12 MPX	M12x1,5	17	38	16	6
570052	21KA IM14 MPX	M14x1,5	17	38	16	6

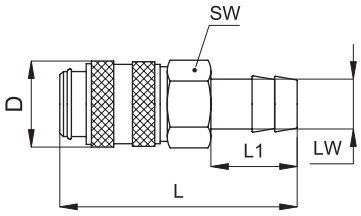

Coupling with hose adapter

Code	Item	LW	SW	L	D	L_1
570053	21KA TF04 MPX	4	14	46	16	17
570054	21KA TF06 MPX	6	14	46	16	17
570055	21KA TF08 MPX	8	14	46	16	17
570056	21KA TF09 MPX	9	14	46	16	17
570057	21KA TF10 MPX	10	14	46	16	17

LW = Tube internal ø

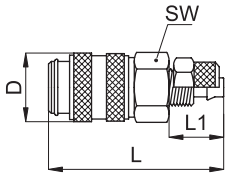

Plug with rapid fitting

Code	Item	Tube ø	SW	L	D	L_1
570059	21KA KO06 MPX	6	14	42	16	13
570060	21KA KO08 MPX	8	14	42	16	13

Tube ø = Tube external ø

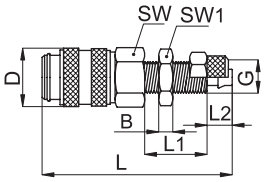

Coupling with bulkhead rapid fitting

Code	Item	Tube ø	SW	L	D	L_1	L_2	SW_1	B	G
570061	21KA KS06 MPX	6	14	54	16	18	7	14	4	M10x1
570062	21KA KS08 MPX	8	17	54	16	18	7	17	4	M12x1

Tube ø = Tube external ø

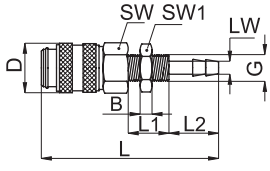

Coupling with bulkhead hose adapter

Code	Item	LW	SW	L	D	L_1	L_2	SW_1	B	G
570063	21KA TS04 MPX	4	14	60	16	14	17	14	4	M10x1
570064	21KA TS05 MPX	5	14	60	16	14	17	17	4	M12x1
570065	21KA TS06 MPX	6	17	60	16	14	17	17	4	M12x1
570066	21KA TS08 MPX	8	17	60	16	14	17	17	4	M12x1
572387	21KA TS10 MPX	10	17	60	16	14	17	19	4	M14x1

LW = Tube internal ø

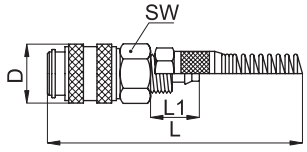

Coupling with rapid fitting and anti-deflection spring

Code	Item	Tube ø	SW	L	D	L_1
570067	21KA KK06 MPX	6	14	125	16	13
570068	21KA KK08 MPX	8	14	130	16	13

Tube ø = Tube external ø

Quick-lock couplings

Series 21, DN 5 = 20 mm²

In brass

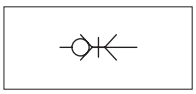

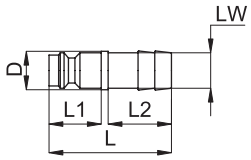

Plug with hose adapter

Code	Item	LW	L	D	L_1	L_2
570069	21SF TF04 MXX	4	32	9	14	17
570070	21SF TF05 MXX	5	32	9	14	17
570071	21SF TF06 MXX	6	32	9	14	17
570072	21SF TF08 MXX	8	32	9	14	17
570073	21SF TF09 MXX	9	33	10	14	17
570074	21SF TF10 MXX	10	33	12	14	17

LW = Tube internal ø

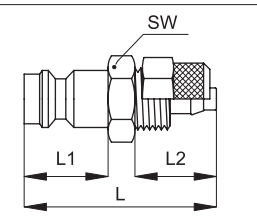

Plug with rapid fitting

Code	Item	Tube ø	SW	L	D	L_1	L_2	G
570076	21SF KO06 MXX	6	14	32	10	14	12	M10x1
570077	21SF KO08 MXX	8	17	32	12	14	12	M12x1
572377	21SF KO10 MXX	10	17	36	-	14	17	M16x1

Tube ø = Tube external ø

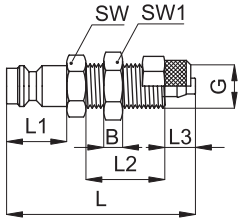

Plug with bulkhead rapid fitting

Code	Item	Tube ø	SW	L	L_1	L_2	L_3	SW_1	B	G
570078	21SF KS06 MXX	6	14	44	14	18	7	14	4	M10x1
570079	21SF KS08 MXX	8	17	44	14	18	7	17	4	M12x1

Tube ø = Tube external ø

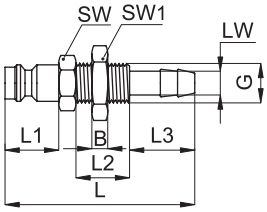

Plug with bulkhead hose adapter

Code	Item	LW	SW	L	L_1	L_2	L_3	SW_1	B	G
570080	21SF TS04 MXX	4	14	50	14	14	17	14	4	M10x1
570081	21SF TS05 MXX	5	14	50	14	14	17	14	4	M10x1
570082	21SF TS06 MXX	6	14	50	14	14	17	17	4	M12x1
570083	21SF TS08 MXX	8	14	50	14	14	17	17	4	M12x1
570084	21SF TS09 MXX	9	14	50	14	14	17	17	4	M12x1
570085	21SF TS10 MXX	10	17	50	17	14	17	19	4	M14x1

LW = Tube internal ø

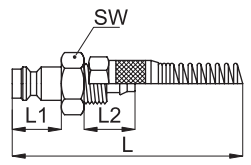

Plug with rapid fitting and anti-deflection spring

Code	Item	ø Tubo	L	L_1	L_2
570086	21SF KK06 MXX	6	115	14	12
570087	21SF KK08 MXX	8	120	14	12

Tube ø = Tube external ø

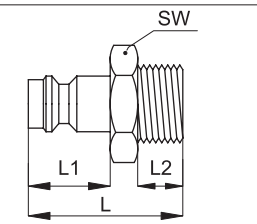

Plug with male thread

Code	Item	Thread	SW	L	L_1	L_2
570088	21SF AW10 MXX	1/8”	14	25	14	7
570089	21SF AW13 MXX	1/4”	17	28	14	9
570090	21SF AW17 MXX	3/8”	19	28	14	9
570091	21SF AD10 MXX	M10x1	14	26	14	8
570092	21SF AD12 MXX	M12x1,5	17	28	14	10
570093	21SF AD14 MXX	M14x1,5	17	28	14	10

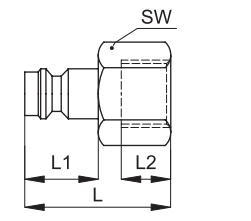

Plug with female thread

Code	Item	Thread	SW	L	L_1	L_2
570094	21SF IW10 MXX	1/8”	14	25	14	8
570095	21SF IW13 MXX	1/4”	17	26	14	9
570096	21SF IW17 MXX	3/8”	19	27	14	9
570097	21SF IM10 MXX	M10x1	14	27	14	9
570098	21SF IM12 MXX	M12x1,5	17	27	14	10
570099	21SF IM14 MXX	M14x1,5	17	27	14	10

Version	Type
Coupling with male metric thread DIN 2353	26KAAD
Coupling with male BSP parallel thread ISO 228	26KAAW
Coupling with female metric thread DIN 13	26KAIM
Coupling with female BSP parallel thread ISO 228	26KAIW
Coupling with hose adapter	26KATF
Coupling with rapid fitting	26KAKO
Coupling with bulkhead hose adapter	26KATS
Coupling with rapid fitting and anti-deflection spring	26KAKK
Plug with hose adapter	26SFTF
Plug with rapid fitting	26SFKO
Plug with bulkhead hose adapter	26SFTS
Plug with rapid fitting and anti-deflection spring	26SFKK
Plug with male metric thread DIN 2353	26SFAD
Plug with male BSP parallel thread ISO 228	26SFAW
Plug with female metric thread DIN 13	26SFIM
Plug with female BSP parallel thread ISO 228	26SFIW





Series of quick-lock couplings single shut off (only on the coupling), standard in brass (not nickel plated).
The quick-lock couplings series 26 can be used in various fields and for this it is considered universal.
The connection tightness between the coupling and the plug is guaranteed by a series of spheres and this allows a longer life time even when the connections and the disconnections are frequent.

For standard items, codes and dimensions see tables from page 4.45.22.

On request these couplings can be supplied (special executions):
- Double shut off
- With coupler body completely in stainless steel AISI 303 or AISI 316.
- With special seals (FKM or EPDM).
- Nickel plated (standard or chemical nickel plating)
- Without shut off valves

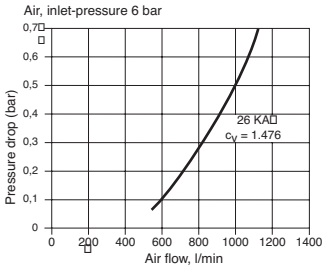

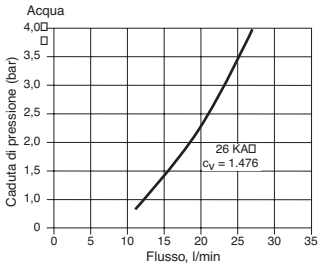

Technical data		
Fluid	Compressed air, water, non-aggressive fluids	
Pressure	35 bar (Vacuum resistance: 750 mm.Hg)	
Temperature range	-20 °C ÷ 100 °C	
Parallel threads	UNI - ISO 228/1 (BSP)	
Metric threads	DIN 13 - DIN 2353	
Materials	Coupler body, valve, releasing sleeve:	Brass OT 58
	Springs and elastic ring:	Stainless steel AISI 301
	Balls:	Stainless steel AISI 420
	Seals:	Nitrile rubber (NBR)

Quick-lock couplings

Series 26, DN 7,2 = 40 mm²

In brass

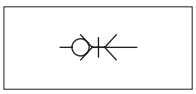

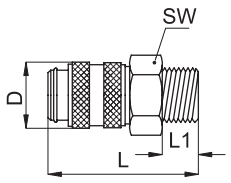

Coupling with male thread

Code	Item	Thread	SW	L	D	L_1
570100	26KA AW10 MPX	1/8”	22	43	25	9
570006	26KA AW13 MPX	1/4”	22	41	25	9
570101	26KA AW17 MPX	3/8”	22	41	25	9
570102	26KA AW21 MPX	1/2”	22	44	25	12
570104	26KA AD14 MPX	M14x1,5	22	42	25	10
570105	26KA AD16 MPX	M16x1,5	22	43	25	11
570106	26KA AD18 MPX	M18x1,5	22	43	25	11

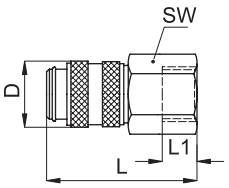

Coupling with female thread

Code	Item	Thread	SW	L	D	L_1
570107	26KA IW13 MPX	1/4”	22	41	25	9
570108	26KA IW17 MPX	3/8”	22	41	25	9
570109	26KA IW21 MPX	1/2”	24	44	25	12
570110	26KA IM14 MPX	M14x1,5	22	41	25	9
570111	26KA IM16 MPX	M16x1,5	22	41	25	9
570112	26KA IM18 MPX	M18x1,5	22	41	25	9

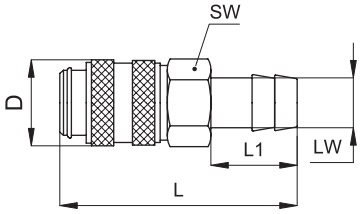

Coupling with hose adapter

Code	Item	LW	SW	L	D	L_1
570113	26KA TF06 MPX	6	21	58	25	25
570114	26KA TF08 MPX	8	21	58	25	25
570115	26KA TF09 MPX	9	21	58	25	25
570116	26KA TF10 MPX	10	21	58	25	25
570117	26KA TF13 MPX	13	21	58	25	25
570118	26KA TP06 MPX	6	21	58	25	20,5
570119	26KA TP10 MPX	10	21	58	25	24
570120	26KA TP13 MPX	13	21	58	25	28

LW = Tube internal ø

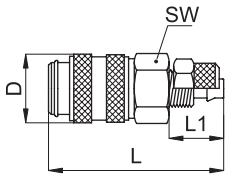

Coupling with rapid fitting

Code	Item	Tube ø	SW	L	D	L_1
570270	26KA KO06 MPX	6	21	46	25	11
570121	26KA KO08 MPX	8	21	46	25	13
570122	26KA KO10 MPX	10	21	49	25	17
570123	26KA KO12 MPX	12	21	49	25	17

Tube ø = Tube external ø

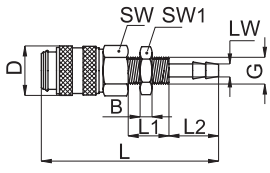

Coupling with bulkhead hose adapter

Code	Item	LW	SW	L	D	L_1	L_2	SW_1	G
572378	26KA TS06 MPX	6	21	60	25	25	25	14	M12x1
572379	26KA TS08 MPX	8	21	63	25	25	25	17	M16x1
572380	26KA TS10 MPX	10	21	72	25	25	25	17	M16x1

LW = Tube internal ø

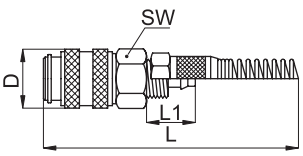

Coupling with rapid fitting and anti-deflection spring

Code	Item	Tube ø	SW	L	D	L_1
570124	26KA KK08 MPX	8	21	135	27	13
570125	26KA KK10 MPX	10	21	150	27	17
570126	26KA KK12 MPX	12	21	150	27	17

Tube ø = Tube external ø

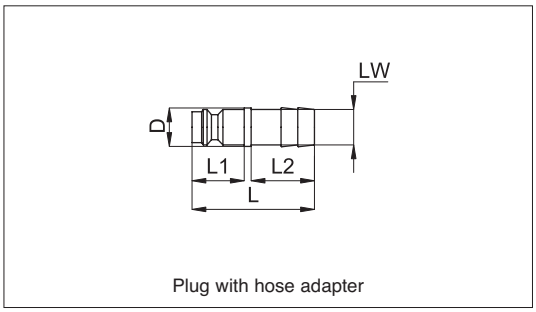

Plug with hose adapter

Code	Item	LW	L	D	L_1	L_2
570127	26SF TF04 MXX	4	48	9	20	25
570128	26SF TF06 MXX	6	48	9	20	25
570129	26SF TF08 MXX	8	48	9	20	25
570130	26SF TF09 MXX	9	48	10	20	25
570131	26SF TF10 MXX	10	48	12	20	25
570132	26SF TF13 MXX	13	48	15	20	25

LW = Tube internal ø

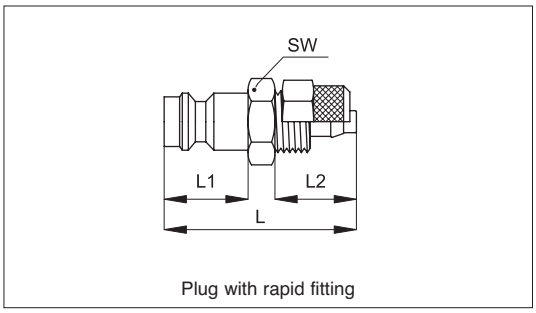

Plug with rapid fitting

Code	Item	Tube ø	SW	L	L_1	L_2
570136	26SF KO06 MXX	6	14	34	20	13
570137	26SF KO08 MXX	8	17	34	20	13
570138	26SF KO10 MXX	10	17	42	20	17
570139	26SF KO12 MXX	12	19	42	20	17

Tube ø = Tube external ø

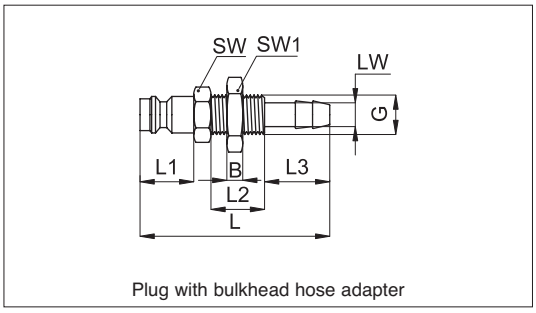

Plug with bulkhead hose adapter

Code	Item	LW	SW	L	L_1	L_2	L_3	SW_1	B	G
570140	26SF TS06 MXX	6	14	64	20	14	25	14	4	M12x1
570141	26SF TS08 MXX	8	17	64	20	14	25	17	4	M12x1
570142	26SF TS10 MXX	10	17	64	20	14	25	17	4	M14x1

LW = Tube internal ø

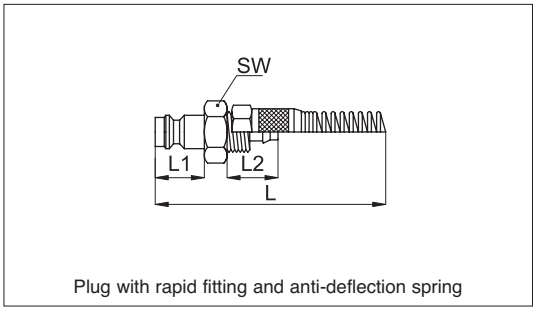

Plug with rapid fitting and anti-deflection spring

Code	Item	Tube ø	SW	L	L_1	L_2
570143	26SF KK06 MXX	6	14	120	20	13
570144	26SF KK08 MXX	8	17	120	20	13
570145	26SF KK10 MXX	10	17	140	20	17
570146	26KA KK12 MXX	12	19	140	20	17

Tube ø = Tube external ø

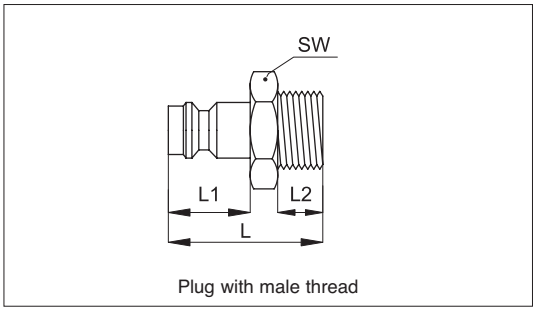

Plug with male thread

Code	Item	Thread	SW	L	L_1	L_2
570147	26SF AW10 MXX	1/8”	14	31	20	7
570148	26SF AW13 MXX	1/4”	17	33	20	9
570149	26SF AW17 MXX	3/8”	19	33	20	9
570150	26SF AW21 MXX	1/2”	22	38	20	12
570151	26SF AD14 MXX	M14x1,5	17	35	20	10
570152	26SF AD16 MXX	M16x1,5	19	36	20	11
570153	26SF AD18 MXX	M18x1,5	22	37	20	11

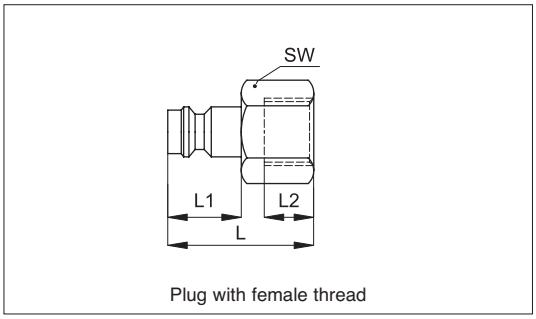

Plug with female thread

Code	Item	Thread	SW	L	L_1	L_2
570154	26SF IW10 MXX	1/8”	14	30	20	7
570155	26SF IW13 MXX	1/4”	17	33	20	10
570156	26SF IW17 MXX	3/8”	19	33	20	10
570157	26SF IW21 MXX	1/2”	24	36	20	12
570158	26SF IM14 MXX	M14x1,5	17	33	20	10
570159	26SF IM16 MXX	M16x1,5	19	33	20	10
570160	26SF IM18 MXX	M18x1,5	22	36	20	13

Notes

Version	Symbol	Type
Size 1, with push-in fittings without check valves	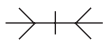	A113
Size 2, with push-in fittings without check valves	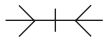	A213

On request they can be supplied in special configurations.
Also available with check valves, type A013, only with push-in fittings 6x4, 6 connections and 8x6, 4 connections (overall dimensions same as type A113).

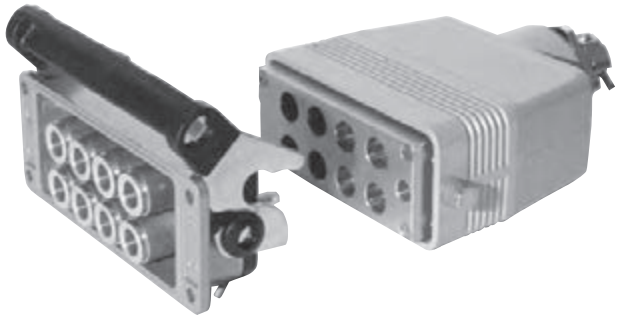

Series of multiple connectors available in various configurations (number and diameter of the tubes).
They are normally used when it is necessary to disconnect more connections quickly with only one operation only.
The tubes connection in the socket is with push-in fittings.
Is possible to connect a smaller number of tubes.
Adapter cannot be assembled the reverse side to the socket.

For standard items, codes and dimensions see the table at page 4.55.2.

Technical data		
Fluid	Compressed air	
Pressure range	0 ÷ 12 bar (Vacuum resistance: 750 mm.Hg) - Type A013 max 7 bar	
Temperature range	-20 °C ÷ 70 °C	
Connections (tube ø)	4x2,5; 5x3; 6x4; 8x6	
Connection tubes	Calibrated nylon, polyurethane and rilsan	
Tubes tolerances	± 0,05 mm	
Materials	Body:	Painted aluminium
	Releasing lever:	Stainless steel
	Fittings:	Brass
	Seals:	Nitrile rubber (NBR)

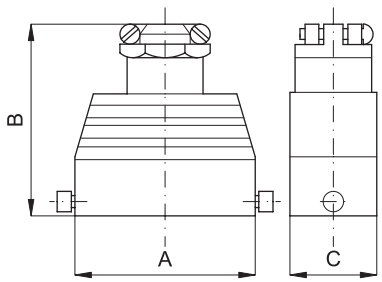

MULTIPLE ADAPTER

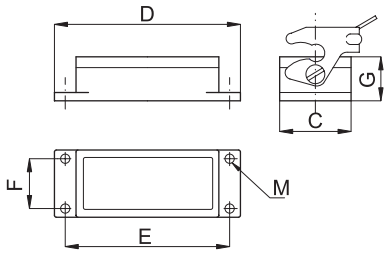

MULTIPLE SOCKET

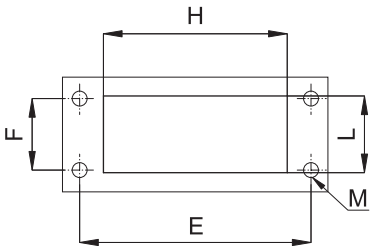

HOUSING FOR MULTIPLE SOCKET

Code	Item	Tube ø	A	B	C	D	E	F	G	H	L	M	Number of tubes
025001	A113-4-12	4x2,5	93	100	45	113	103	32	28	88	38	4,5	12
025002	A113-5-10	5x3,2	93	100	45	113	103	32	28	88	38	4,5	10
025003	A113-6-10	6x4	93	100	45	113	103	32	28	88	38	4,5	10
025004	A113-8-8	8x6	93	100	45	113	103	32	28	88	38	4,5	8
025021	A213-4-20	4x2,5	120	100	45	140	130	32	28	115	38	4,5	20
025022	A213-6-14	6x4	120	100	45	140	130	32	28	115	38	4,5	14

Version	Symbol	Type
With cross outlets		RX
With outlets on one side		RY
With outlets on both sides		RZ
With push-in fitting outlets on one side		RR



Series of anodised aluminium collectors available in various configurations and with female threaded outlets (1/8'' and 1/4") or with integral 4- 6- 8- 10 mm push-in fittings.

For standard items, codes and dimensions see tables at page 4.60.2.

Standard connections		
Type	Inlets	Outlets
RX	1/8"	1/8"
	1/4"	1/4"
	3/8"	3/8"
	1/2"	1/2"
RY	1/4"	1/8"
	3/8"	1/4"
RZ	1/4"	1/8"
	3/8"	1/4"
RR	1/4"	ø external 4 mm
	1/4"	ø external 6 mm
	3/8"	ø external 8 mm
	3/8"	ø external 10 mm

4

Technical data	
Fluid	Compressed air and other fluids
Pressure	RX, RY, RZ: Always higher than the ones used in pneumatic installations. RR: max 12 bar
Temperature range	See the data of the tubes and the fittings used.
Parallel threads	UNI - ISO 228/1 (BSP)
Connection tubes(for the RR type)	Calibrated nylon, polyurethane and rilsan
Tubes tolerances	± 0,05 mm
Materials	Body: Anodised aluminium For fittings data in the RR type see page 4.5.1.

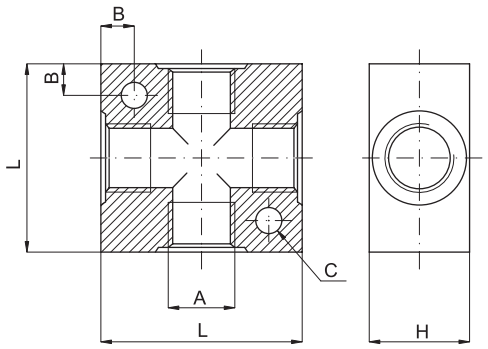

With cross outlets

Code	Item	A	L	B	C	H
024501	RX8	1/8”	25	4,3	4,5	16
024502	RX4	1/4”	40	6,5	5,5	20
024503	RX3	3/8”	40	7,5	5,5	25
024504	RX2	1/2”	50	7,5	5,5	30

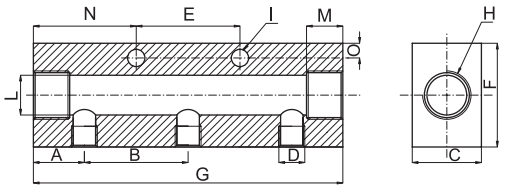

With outlets on one side

Code	Item	A	B	C	D	E	F	G	H	I	L	M	N	O	N. of side holes
024521	RY1	15	30	20	1/8”	30	30	90	1/4”	5,5	10	9,5	30	5	3
024522	RY2	15	30	20	1/8”	60	30	120	1/4”	5,5	10	9,5	30	5	4
024523	RY3	15	30	20	1/8”	90	30	150	1/4”	5,5	10	9,5	30	5	5
024524	RY4	15	30	20	1/8”	120	30	180	1/4”	5,5	10	9,5	30	5	6
024525	RY5	18	36	20	1/4”	36	30	108	3/8”	6,5	12	10,5	36	6	3
024526	RY6	18	36	20	1/4”	72	30	144	3/8”	6,5	12	10,5	36	6	4
024527	RY7	18	36	20	1/4”	108	30	180	3/8”	6,5	12	10,5	36	6	5
024528	RY8	18	36	20	1/4”	144	30	216	3/8”	6,5	12	10,5	36	6	6
024529	RY9	15	30	20	1/8”	18	30	60	1/4”	6,5	10	9,5	30	6	2

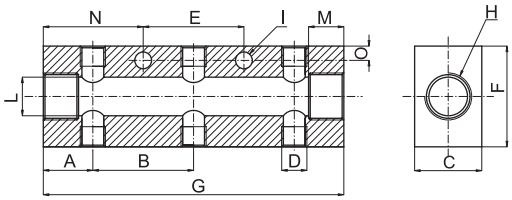

With outlets on both sides

Code	Item	A	B	C	D	E	F	G	H	I	L	M	N	O	N. of side holes
024551	RZ1	16	30	20	1/8”	0	30	62	1/4”	6,5	10	9,5	31	6	2+2
024552	RZ2	15	30	20	1/8”	30	30	90	1/4”	5,5	10	9,5	30	5	3+3
024553	RZ3	15	30	20	1/8”	60	30	120	1/4”	5,5	10	9,5	30	5	4+4
024554	RZ4	15	30	20	1/8”	90	30	150	1/4”	5,5	10	9,5	30	5	5+5
024555	RZ5	18	36	20	1/4”	28	40	72	3/8”	6,5	12	10,5	36	6	2+2
024556	RZ6	18	36	20	1/4”	36	40	108	3/8”	6,5	12	10,5	36	6	3+3
024557	RZ7	18	36	20	1/4”	72	40	144	3/8”	6,5	12	10,5	36	6	4+4
024558	RZ8	18	36	20	1/4”	108	40	180	3/8”	6,5	12	10,5	36	6	5+5

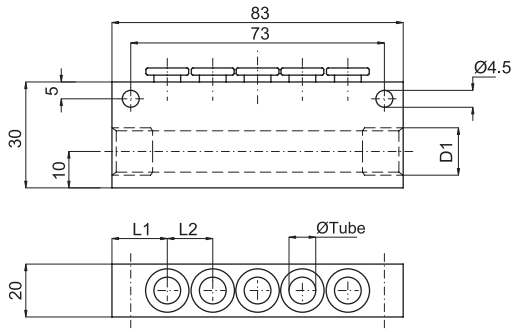

With push-in fitting outlets on one side

Code	Item	D_1	L_1	L_2	Tube external ø	N. of outlets
024570	RR46	1/4”	14	11	4	6
024571	RR65	1/4”	15,5	13	6	5
024572	RR84	3/8”	17,5	16	8	4

GENERAL INDEX

ACCESSORIES INDEX

Version	Symbol	Type
Rilsan linear tube		TR
Polyurethane linear tube		TPU
Polyethylene linear tube		TP
Nylon linear tube		TN
Rilsan spiral without stem adapters		SR
Polyurethane spiral without stem adapters		SPU



Series of tubes and spirals for pneumatic installations available in various materials, dimensions and colours according to the application and the fitting used.
On request they can also be supplied in the multi-tube version.

How to order: TR8X6NE

TR	8x6	NE
Type	ø Code	Colour code

See the tables below to choose available types / dimensions / colours / kits.

Table of tube ø/type standard dimensions

Type	Code	4x2	4x2,5	4x2,7	5x3	6x4	8x5,5	8x6	10x6,5	10x8	12x8	12x9	12x10	14x10	14x12	15x12
TR		●	●	●	●	●		●		●			●		●	●
TPU		●	●		●	●	●	●	●	●	●	●		●		
TP		●	●		●	●		●		●			●	●		●
TN		●	●		●	●		●		●			●		●	●
SR		●	●			●		●		●			●			●
SPU			●			●	●		●		●					

Table of colour/type standard colours

Type	Colour	Neutral	Azure	Black	Red	Yellow	Green	Blue	Orange
	Code	NT	AZ	NE	RO	GI	VE	BL	AR
TR		●	●	●	●	●	●		
TPU		●	●	●					
TP		●		●					
TN		●		●				●	
SR					●			●	●
SPU		●	●	●		●			

Attention: All the 14 and 15 mm tubes are only available in neutral colour (NT).

Technical data				
	Rilsan PA11	Polyurethane PU	Polyethylene PE	Nylon PA6
Fluid	Compressed air			
Pressure (at 20 °C) bar	4x2=66, 4x2,5=46, 4x2,7=36, 5x3=50, 6x4=40, 8x6=29, 10x8=18, 12x10=17, 14x12=15, 15x12=20	4x2=25, 4x2,5=20, 5x3=20, 6x4=18, 8x5,5=13, 8x6=12, 10x6,5=11, 10x8=10, 12x8=13, 12x9=9,5, 14x10=9	4x2=30, 4x2,5=20, 5x3=25, 6x4=20, 8x6=14, 10x8=9, 12x10=7,5, 14x10=16, 15x12=10	4x2=80, 4x2,5=60, 5x3=60, 6x4=45, 8x6=35, 10x8=25, 12x10=23, 14x12=18, 15x12=25
Temperature range	-40 °C ÷ +80 °C	-40 °C ÷ +60 °C	-10 °C ÷ +60 °C	-10 °C ÷ +90 °C
External ø tolerance ≤ 10 mm	± 0,05	± 0,07	± 0,05	± 0,05
External ø tolerance ≥12 mm	± 0,1	± 0,1	± 0,1	± 0,1
Standard rolls	from ø 4 to ø 10 = 100 mt from ø 12 to ø 15 = 50 mt	100 mt	100 mt	from ø 4 to ø 12 = 100 mt from ø 14 to ø 15 = 50 mt

Version	Symbol	Type
Single layer tube		FS
Double layer tube		FW
Protection cap for single layer tube		CP
Protection cap for double layer tube		CPFW



Series of single and double layer spatter resistant tubes suitable for weld lines.
The double layer FW type is in conformity with standards:
- internal tube: V-2 UL94
- external tube: V-0 UL94

The external layer cover must be removed by the cutter type TSC (see page 4.65.21).
The caps must be used as protections to prevent the weld slags from depositing between the fitting and the tube.
You should use metal fittings series R (see page 4.2.1).

Type: **FS**

Code	Item	Tube ø	Roll (m)
841001	FS4x2,5NE	4x2,5	100
841011	FS6x4NE	6x4	100
841021	FS8x5,5NE	8x5,5	100
841031	FS10x7NE	10x7	100
841041	FS12x8,5NE	12x8,5	100

Type: **FW**

Code	Item	Cover tightness	Tube ø	Roll (mt)
841101	FW6x4NE	1	6x4	100
841102	FW8x6NE	1	8x6	100
841103	FW10x7,5NE	1	10x7,5	100
841104	FW12x9NE	1	12x9	50

Type: **CP**

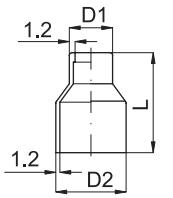

Code	Item	Tube ø	L	D_1	D_2
841095	CP4	4	20	4,5	9,5
841096	CP6	6	24	6	12,3
841097	CP8	8	26	8	14,3
841098	CP10	10	30	10	17,3
841099	CP12	12	31	12	19,8

Type: **CPFW**

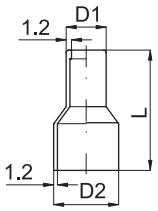

Code	Item	Tube ø	L	D_1	D_2
844961	CPFW6	6	32	8	12,3
844962	CPFW8	8	34	10	14,3
844963	CPFW10	10	40	12	17,3
844964	CPFW12	12	41	14	19,8

Technical data		
	Type **FS**	Type **FW**
Fluid	Compressed air, water, oil	
Pressure (at 20 °C)	ø from 4 to 6 = 10 bar. ø from 8 to 12 = 9 bar.	ø 6 = 10 bar ø from 8 to12 = 8 bar.
Temperature range	Air: -40 °C ÷ +100 °C - Water: 0 °C ÷ +70 °C - Oil: -40 °C ÷ +80 °C	

Tube cutters

Version	Code	Item
In black plastic, for tube from ø 2 to 12 mm	022911	PTPNE
Metal for tube from ø 2 to 12 mm	022981	PTM12
Metal for tube till ø 25 mm	022982	PTM25
Replacement blade for type PTP	022910	LPTP
Replacement blade for type PTM12	022991	LPTM12
Replacement blade for type PTM25	022992	LPTM25
External cover cutter for double layer spatter resistant tube (for ø 6 and 8 mm)	750010	TSC8-6
External cover cutter for double layer spatter resistant tube (for ø 10 and 12 mm)	750011	TSC12-10



On request the series PTP can be supplied in various colours and be customised with private label (for bulk quantities).

type: **PTM...**

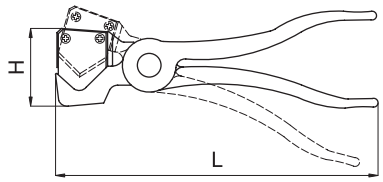

Item	L	H
PTM12	130	30
PTM25	185	46

type: **PTP...**

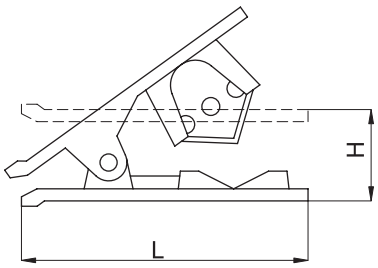

Item	L	H
PTP...	81	27

type: **TSC...**

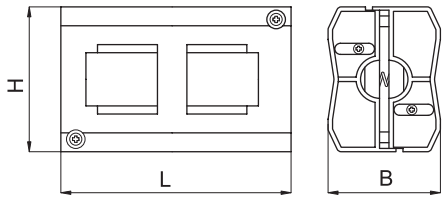

Item	L	H	B
TSC8-6	75	49	39
TSC12-10			

4

Technical data			
	PTP	PTM	TSC
Body material	Acetal resin	Chrome plated steel	Acetal resin
Blade material	Stainless steel	Steel	Stainless steel
Tube	Rilsan, polyurethane, polyethylene, nylon		Spatter resistant (for cutting the external cover)

Blow guns

Version	Code	Item
Made of metal, with female 1/4” port (economic model)	572384	AH13
Made of plastic, with female 1/4” port and short nozzle	570167	AN13
Made of plastic, with female 1/4” port and extension tube	570166	AK13
Made of plastic, with female 1/4” port and female connection for accessories	570168	AM13
Silenced nozzle (for the blow gun type AM13)	570169	AR12
Venturi nozzle (for the blow gun type AM13)	570170	AT12
150 mm extension tube (for the blow gun type AM13)	570171	VR12
Safety nozzle (for the blow gun type AM13)	570172	SD12



Series of blow guns for industrial use.
Various accessories can be applied to the type AM13:

AR12 Silenced nozzle lowering noise level (till 63 dB)

AT12 Venturi nozzle, energy saving as thanks to its working principle it aspirates 2/3 of environmental air and in this way allows a wide blow-out effect

VR12 Extension tube

SD12 Safety nozzle forming a protection shield against kicking chips.

Technical data		
Fluid	Compressed air	
Pressure	10 bar	
Temperature range	-10 °C ÷ +60 °C	
Materials	Body:	AH13, in die cast nickel plated aluminium; AN13, AK13, AM13 in acetal resin
	Seals:	Nitrile rubber (NBR)
	Nozzles:	SD12, VR12 in nickel plated brass - AT12, in acetal resin - VR12, in Aluminium

Version	Symbol	Type
In aluminium		RA
In nylon (white)		RN
In copper		RR
In fibre		RF
In unlosable nylon (black, indented)		RB



Series of washers applying to male parallel threads to tighten the female thread.
On request they can be supplied with special dimensions.

How to order: 2RN

2	RN
Thread code	Type

Thread	1/8”	1/4”	3/8”	1/2”	3/4”	1”	M5	1 1/4”	1 1/2”	2”
Code	1	2	3	4	5	6	7	14	12	20

RA Aluminium		RN Nylon		RR Copper		RF Fibre		Dimensions			
Code	Item	Code	Item	Code	Item	Code	Item	Thread	Ext. ø	Int. ø	Tightness
022621	1RA	022661	1RN	022641	1RR	022681	1RF	1/8”	14	10	1
022622	2RA	022662	2RN	022642	2RR	022682	1RF	1/4”	17,5	13	1,5
022623	3RA	022663	3RN	022643	3RR	022683	3RF	3/8”	22	17	1,5
022624	4RA	022664	4RN	022644	4RR	022684	4RF	1/2”	27	21	1,5
022625	5RA	022665	5RN	022645	5RR	022685	5RF	3/4”	32	27	1,5
022626	6RA	022666	6RN	022646	6RR	022686	6RF	1”	39	33	1,5
022627	14RA	022667	14RN	022647	14RR	022687	14RF	1 1/4”	50	42	1,5
022628	12RA	022668	12RN	022648	12RR	022688	12RF	1 1/2”	55	48	1,5
022629	20RA	022669	20RN	022649	20RR	022689	20RF	2”	70	60	1,5
022630	7RA	022670	7RN	022650	7RR	022690	7RF	M5	8,5	5	1

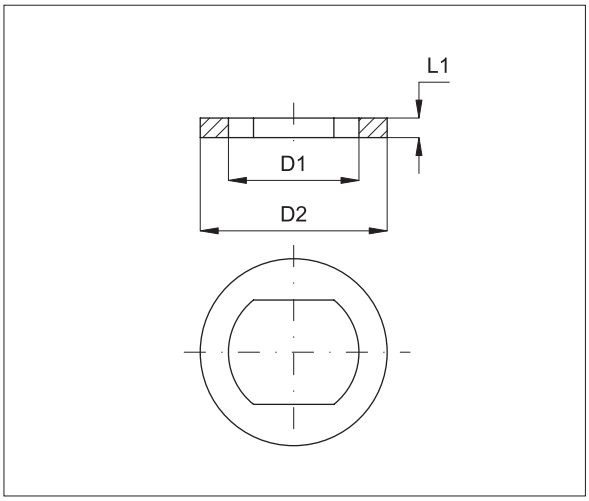

RB Unlosable nylon		Dimensions			
Code	Item	Thread	D_1	D_2	L_1
022691	1RB	1/8”	10	14	2
022692	2RB	1/4”	13,2	18	2
022693	3RB	3/8”	17	22	2
022694	4RB	1/2”	21,5	26	2,5
022695	7RB	M5	5	9	1,5

Notes

Air-reservoirs

According to EC Directive 97/23

Version	Symbol	Type
In azure painted steel	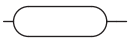	SBCV

Litres	0,5	1	2,5	5	7	10	12	15	24	50	100
Code	05	1	2	5	7	10	12	15	24	50	100

Number of connections	2	4
Code	2	4



Keep to the use and maintenance manual supplied together with each reservoir.

On request, they can be supplied according Directive 94/9/EC - **ATEX**
CE Ex **II 2 GDc T5**

Series of air-reservoirs for compressed air built according to EC directive 97/23 about plants under pressure.

* How to order: 24SBCV4

24	SBCV	4
Litres code	Type	Code of the number of connections

* For standard models, codes and dimensions see tables from page 4.70.2.

For accessories see page 4.70.11.
For safety valves see page 2.390.1.
For pressure-gauges see page 3.50.1.

Technical data	
	SBCV
Fluid	Compressed air
Pressure	11 bar
Hydrostatic test pressure	16,5 bar
Temperature range	-10 °C ÷ +60 °C
Threads	Parallel UNI - ISO 228/1 (BSP)
Materials	Bottom: Steel FeP04 Shell: Steel FeP04 Socket joints: Fe 45.1
External treatments	Epoxide powder painting RAL 5015-110
Weldings	Between the bottom and the shell: Wire welding Between the bottom and the socket joint: Submerged arc welding Between the shell and the socket joint: Submerged arc welding

type: **05SBCV2**

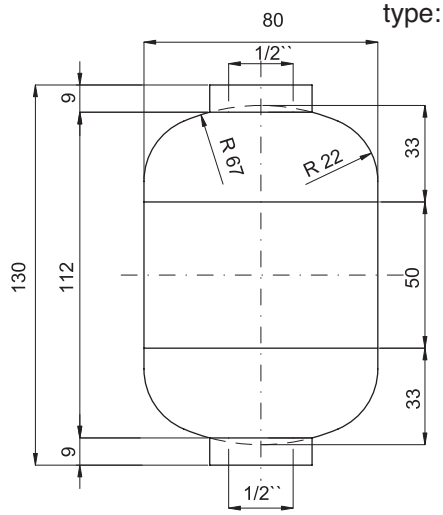

Code	Item	Number of connections
050000	05SBCV2	2

type: **1SBCV2**

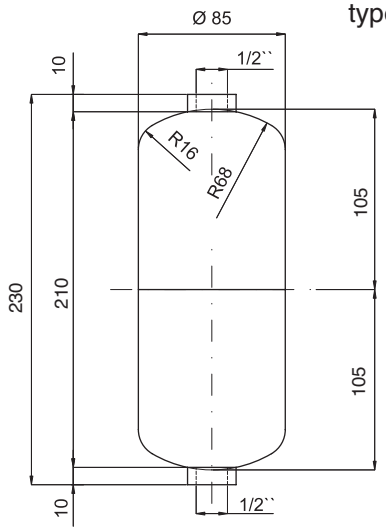

Code	Item	Number of connections
050001	1SBCV2	2

type: **2SBCV2**

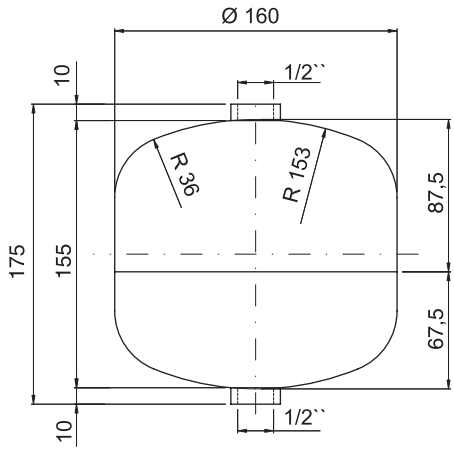

Code	Item	Number of connections
050002	2SBCV2	2

type: **5SBCV2**

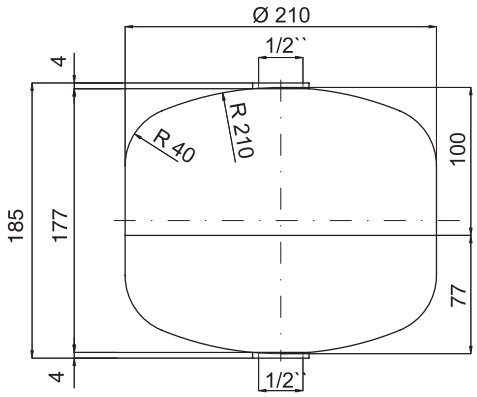

Code	Item	Number of connections
050005	5SBCV2	2

type: **7SBCV2**

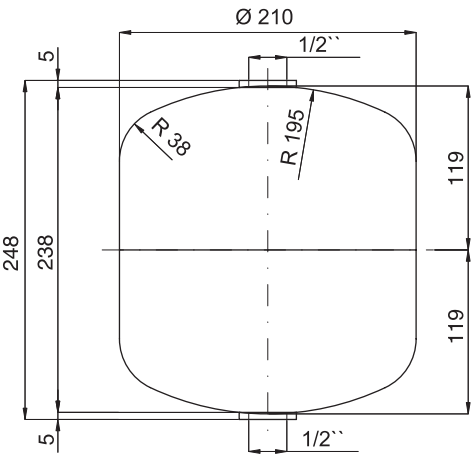

Code	Item	Number of connections
050007	7SBCV2	2

type: **12SBCV2**

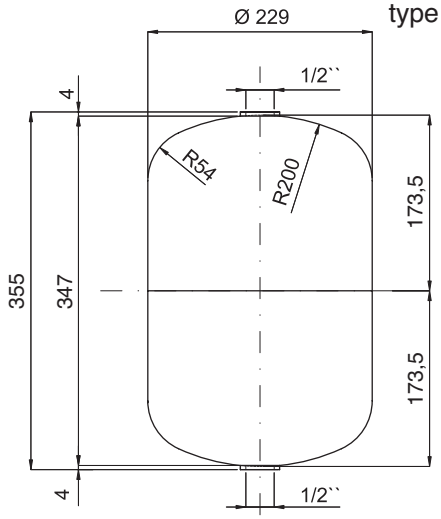

Code	Item	Number of connections
050012	12SBCV2	2

type: **1SBCV4**

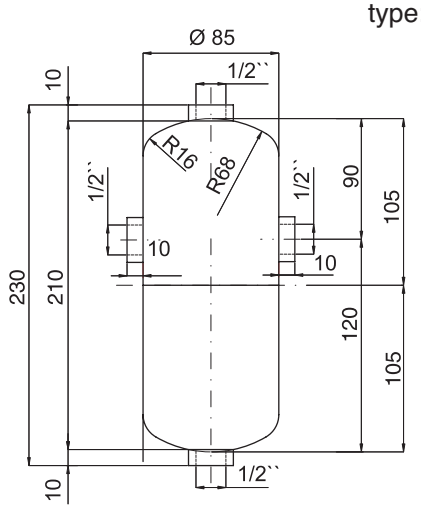

Code	Item	Number of connections
050501	1SBCV4	4

type: **2SBCV4**

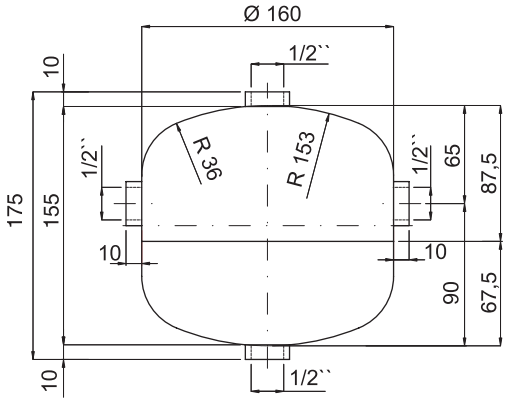

Code	Item	Number of connections
050502	2SBCV4	4

type: **5SBCV4**

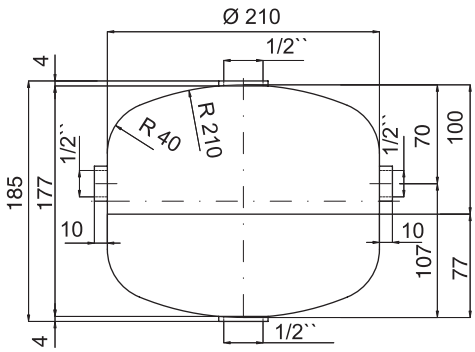

Code	Item	Number of connections
050505	5SBCV4	4

type: 7**SBCV4**

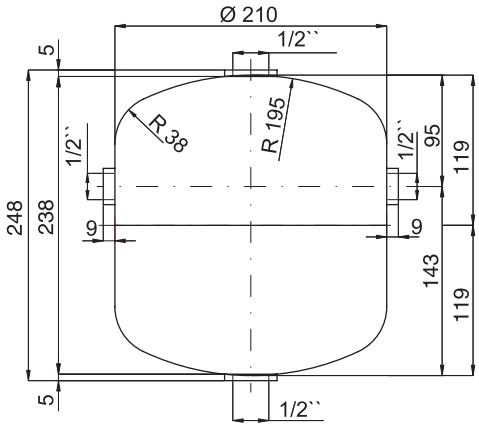

Code	Item	Number of connections
050507	7SBCV4	4

type: **10SBCV4**

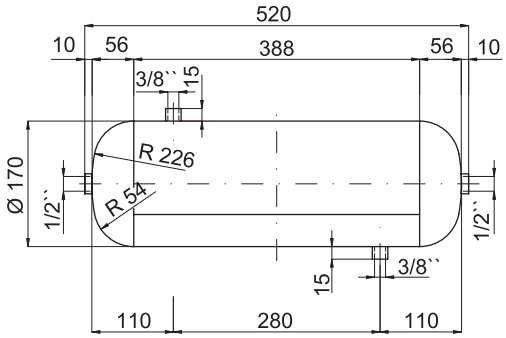

Code	Item	Number of connections
050604	10SBCV4	4

type: **12SBCV4**

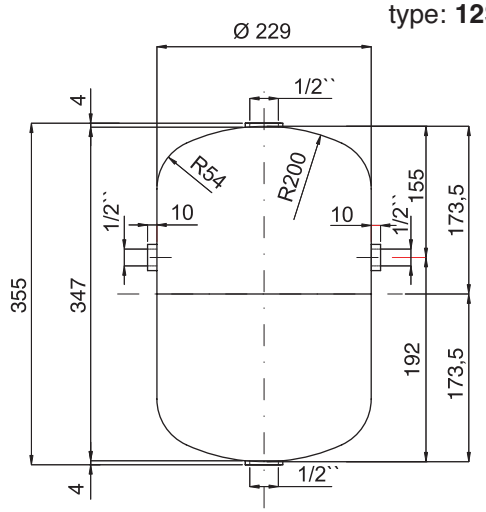

Code	Item	Number of connections
050512	12SBCV4	4

4

type: **15SBCV4**

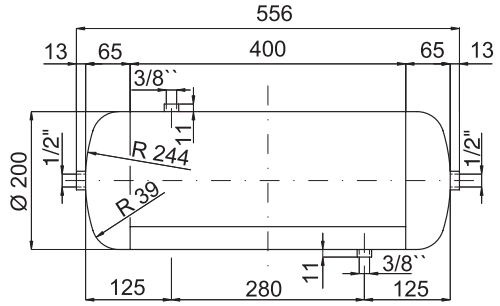

Code	Item	N. of connections
050605	15SBCV4	4

type: **24SBCV4**

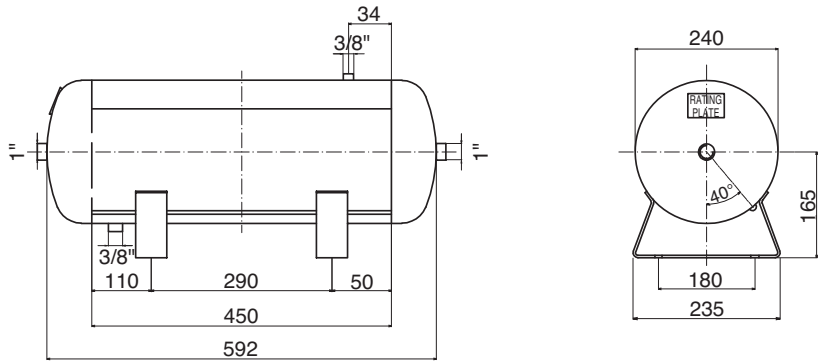

Code	Item	N. of connections
050102	24SBCV4	4

type: **50SBCV4**

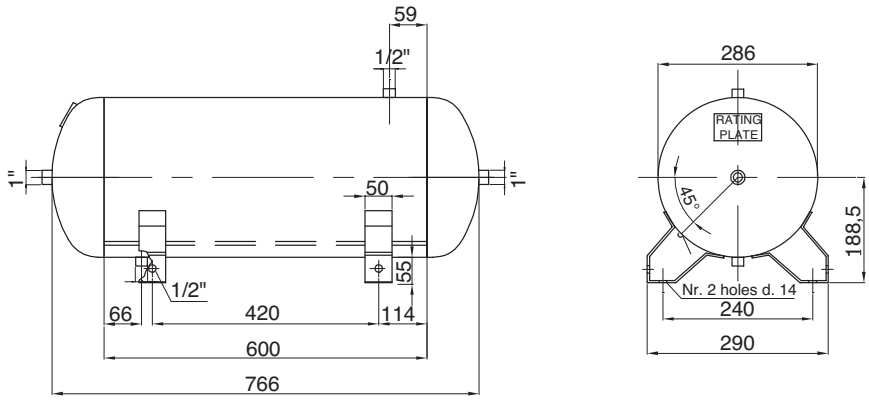

Code	Item	N. of connections
050101	50SBCV4	4

type: **100SBCV4**

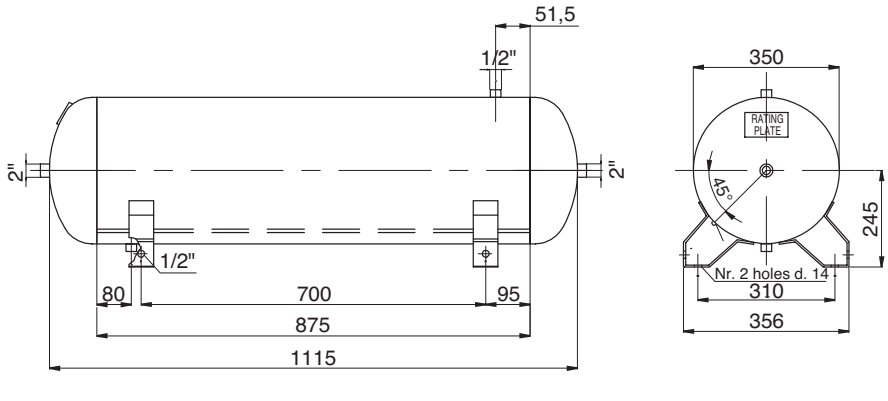

Code	Item	N. of connections
050615	100SBCV4	4

Version	Symbol	Type
Mounting bracket		STSB
Bracket/tank connection fitting		PRSB
Semi-automatic condense drain valve		VCSB



Series of accessories for the mounting (bracket and fitting) and the use (condense drain valve) of the reservoirs.

type: **STSB**

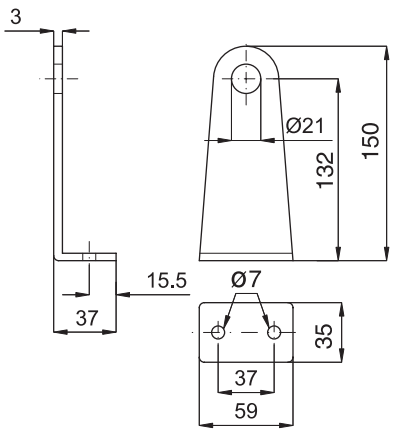

Code	Item
050601	STSB

Material: Zinc plated steel

type: **PRSB**

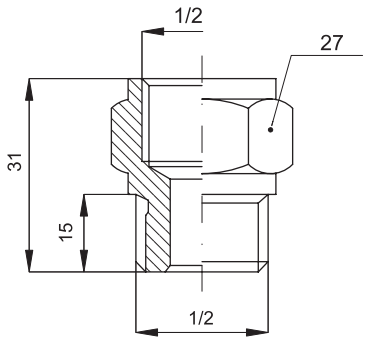

Code	Item
050603	PRSB

Material: Nickel plated brass

type: **VCSB**

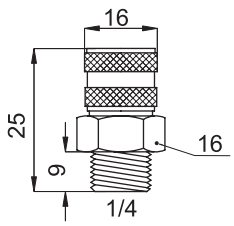

Code	Item
050602	VCSB

Material: Acetal resin

4

Version	Symbol	Type
Unidirectional with female-female thread		V52
Bi-directional with female-female thread		V53
Unidirectional with push-in fitting		V54
Unidirectional with with male thread on inlet and push-in fitting on outlet		V55

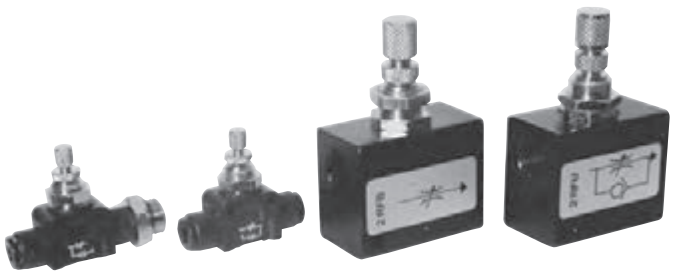

Series of in-line flow restrictors available with one direction (uni-directional) or 2 directions (bi-directional) control of the compressed air flow.

* How to order: V550618

V55	06	18
Type	Thread or tube code	Thread or tube code

* For standard items, codes and dimensions see table at page 4.80.2.

Threads	1/8”	1/4”	3/8”	1/2”	M5
Code	18	14	38	12	M5

External tube ø (mm)	4	6	8
Code	04	06	08

Flow table at 6 bar (Nl/min)														
V52				V53				V54			V55		
1/8”	1/4”	3/8”	1/2”	1/8”	1/4”	3/8”	1/2”	04	06	08	04	06	08
450	600	1100	1400	210	300	500	500	140	250	400	100	250	400

Technical data				
	V52	V53	V54	V55
Fluid	Compressed filtered air with or without lubrication			
Pressure	2 ÷ 10 bar		0,5 ÷ 10 bar	
Temperature	0 °C ÷ 60 °C			
Threads	Parallel: UNI - ISO 228/1. Metric: ISO R / 262			
Connection tubes	According to the fitting used		Calibrated nylon, polyurethane and rilsan	
Tubes tolerances	_		± 0,05 mm	
Materials	Body: Anodised aluminium Needle: Nickel plated brass Seals: Nitrile rubber (NBR) Spring: Stainless steel		Body: Acetal resin Needle: Nickel plated brass Connections: Thread in nickel plated brass/ Push-in fitting Seals: Nitrile rubber (NBR) Spring: Stainless steel	

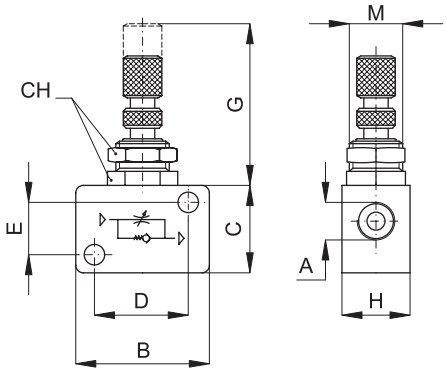

Unidirectional with female-female thread

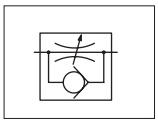

Code	Item	A	B	C	H	D	E	F	G	M	H
030001	V521818	1/8”	32	22	17	23	13	4,5	35	M12	15
030002	V521414	1/4”	40	32	22	30	22	4,5	35	M12	15
030004	V523838	3/8”	56	42	27	43	27	6,5	43	M18	24
030005	V521212	1/2”	56	42	27	43	27	6,5	43	M18	24

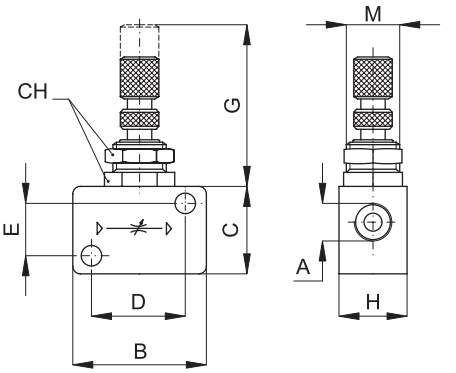

Bi-directional with female-female thread

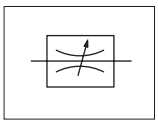

Code	Item	A	B	C	H	D	E	F	G	M	H
030031	V531818	1/8”	32	22	17	23	13	4,5	35	M12	15
030032	V531414	1/4”	40	32	22	30	22	4,5	35	M12	15
030033	V533838	3/8”	56	42	27	43	27	6,5	43	M18	24
030034	V531212	1/2”	56	42	27	43	27	6,5	43	M18	24

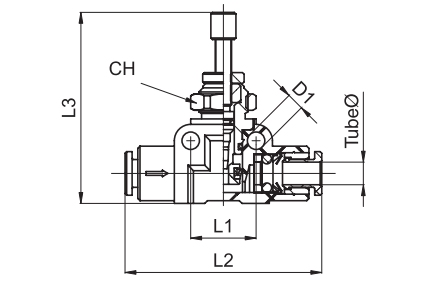

Unidirectional with push-in fitting

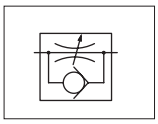

Code	Item	Tube ø	D_1	L_1	L_2	L_3 max	CH	g
030041	V540404	4	3,2	12	36	35	11	14
030042	V540606	6	3,2	15	45	45	14	-
030043	V540808	8	3,2	15	45	45	14	-

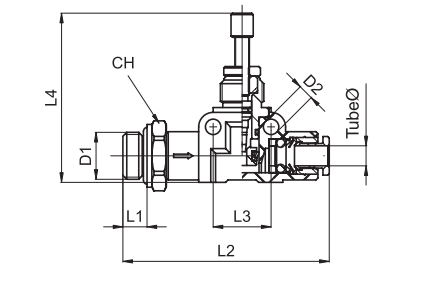

Unidirectional with male thread on inlet
and push-in fitting on outlet

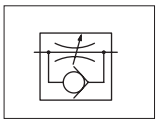

Code	Item	Tube ø	D_1	D_2	L_1	L_2	L_3	L_4 max	CH	g
030047	V550618	6	1/8”	3,2	5	52	15	45	13	-
030048	V550614	6	1/4”	3,2	6,5	54	15	45	16	-
030049	V550818	8	1/8”	3,2	5	53	15	46	14	-
030050	V550814	8	1/4”	3,2	6,5	55	15	46	16	-

Version	Symbol	Type
Body and banjo bolt with adjustment (in brass)		
Banjo bolt with screwdriver adjustment		V15
Banjo bolt with manual adjustment		V14
Banjo BSP with screwdriver adjustment		V17
Banjo BSP with manual adjustment		V40
Swivel with screwdriver adjustment and push-in fitting		V18
Swivel with manual adjustment and push-in fitting		V41
Swivel with screwdriver adjustment and rapid fitting		V20
Body in Delrin and banjo bolt with adjustment in brass		
Banjo with screwdriver adjustment and push-in fitting		V39
Banjo with manual adjustment and push-in fitting		V37
Swivel with screwdriver adjustment and push-in fitting		V38
Swivel with manual adjustment and push-in fitting		V36
Body in polypropylene and banjo bolt with adjustment in stainless steel		
Swivel with manual adjustment and push-in fitting		V50



Series of flow controls normally applied directly to cylinder connections to control the translation velocity.
Available with different functions: unidirectional with outlet adjustment (C); unidirectional with inlet adjustment (V); bi-directional with adjustment in both directions.
In order to control the cylinder velocity it is advisable to apply 2 unidirectional flow controls with outlet adjustment (C), which act on the exhaust flow from the cylinder chambers and don't interfere with the inlet flow to the chambers.

* How to order: V180618C

V18	06	18	C
Type	Thread or tube code	Thread code	Function code

* For standard items, codes and dimensions see tables from page 4.80.12.

For flows see diagrams at page 4.80.30.

External tube ø (mm)	4	6	8	10	12	14
Code	04	06	08	10	12	14

Threads	M5	1/8"	1/4"	3/8"	1/2"
Code	M5	18	14	38	12

Function	For cylinder	For valve	Bi-directional
Code	C	V	B

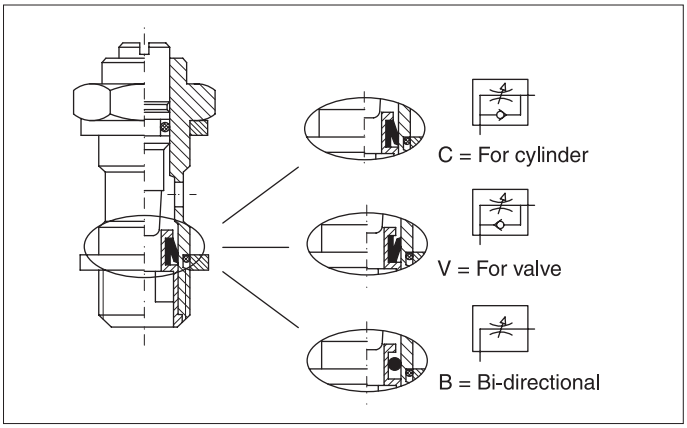

Technical data		
Fluid	Compressed filtered air with or without lubrication	
Pressure range	0,5 ÷ 10 bar	
Temperature range	-20 °C ÷ +70 °C	
Threads	Parallel: UNI - ISO 228/1 (BSP) - Metric: ISO R / 262	
Connection tubes	Calibrated nylon, polyurethane and rilsan	
Tube tolerances	± 0,05 mm	
Materials	Banjo bolt with adjustment:	Nickel plated brass (type V50 is in stainless steel)
	Body:	Nickel plated brass/Acetal resin (type V50 is in polypropylene)
	Seals:	Nitrile rubber (NBR) (type V50 is in EPDM)

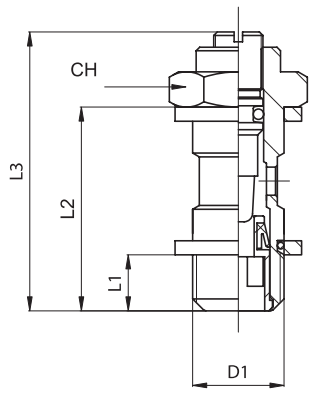

Banjo bolt with screwdriver adjustment

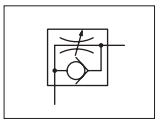

For cylinder

Code	Item	D_1	L_1	L_2	L_3 max	CH	g
024021	V15 00 M5C	M5	4	16	23,5	8	5
024022	V15 00 18C	1/8”	6	25	36	14	16
024023	V15 00 14C	1/4”	8	29	42	17	32
024024	V15 00 38C	3/8”	9	33	52	20	59
024025	V15 00 12C	1/2”	10	39	61	26	108

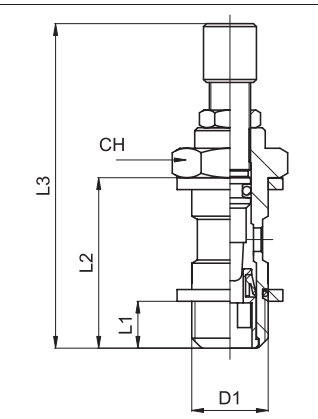

Banjo bolt with manual adjustment

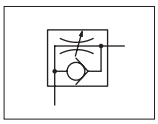

For cylinder

Code	Item	D_1	L_1	L_2	L_3 max	CH	g
024026	V14 00 M5C	M5	4	16	38,5	8	7
024027	V14 00 18C	1/8”	6	25	50	14	22
024028	V14 00 14C	1/4”	8	29	58	17	38
024029	V14 00 38C	3/8”	9	33	72	20	67
024030	V14 00 12C	1/2”	10	39	81	26	121

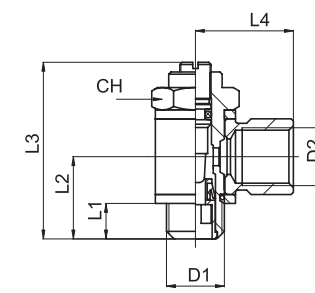

Banjo BSP with screwdriver adjustment

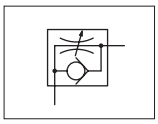

For cylinder

Code	Item	D_1	D_2	L_1	L_2	L_3 max	L_4	CH	g
024061	V17 00 M5C	M5	M5	4	11	23,5	11	8	12
024062	V17 00 18C	1/8”	1/8”	6	16	36	17	14	34
024063	V17 00 14C	1/4”	1/4”	8	19	42	22	17	62
024064	V17 00 38C	3/8”	3/8”	9	22	52	26	20	98
024065	V17 00 12C	1/2”	1/2”	10	25	61	32	26	176

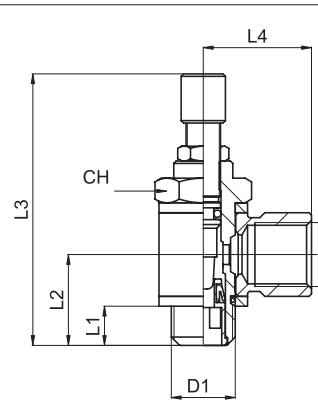

Banjo BSP with manual adjustment

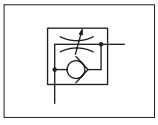

For cylinder

Code	Item	D_1	D_2	L_1	L_2	L_3 max	L_4	CH	g
024045	V40 00 M5C	M5	M5	4	11	38,5	11	8	14
024046	V40 00 18C	1/8”	1/8”	6	16	50	17	14	40
024047	V40 00 14C	1/4”	1/4”	8	19	58	22	17	68
024048	V40 00 38C	3/8”	3/8”	9	22	72	26	20	106
024049	V40 00 12C	1/2”	1/2”	10	25	81	32	26	189

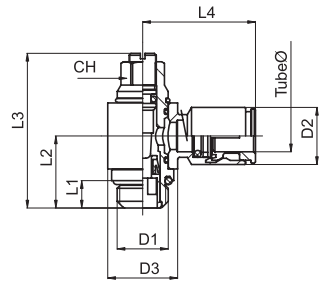

Swivel with screwdriver
adjustment and push-in fitting

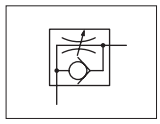

For cylinder

Code	Item	Tube ø	D_1	D_2	D_3	L_1	L_2	L_3 max	L_4	CH	gr.
024081	V18 04 M5C	4	M5	10	10	4	11,5	28	24	6	13
024082	V18 04 18C	4	1/8”	10	14	5	15	36	24	9	31
024085	V18 06 18C	6	1/8”	13	14	5	15	36	26	9	35
024086	V18 06 14C	6	1/4”	13	18	6,5	18	42	28	10	57
024087	V18 08 18C	8	1/8”	15	14	5	15	36	28	9	39
024088	V18 08 14C	8	1/4”	15	18	6,5	18	42	28	10	56
024089	V18 10 14C	10	1/4”	18	18	6,5	18	42	32	10	87

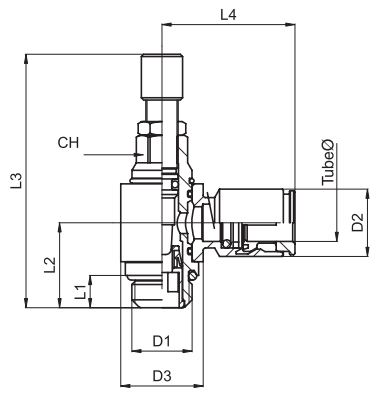

Swivel with manual
adjustment and push-in fitting

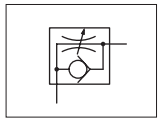

For cylinder

Code	Item	Tube ø	D_1	D_2	D_3	L_1	L_2	L_3 max	L_4	CH	gr.
024185	V41 04 M5C	4	M5	10	10	4	11,5	39	24	6	15
024186	V41 04 18C	4	1/8”	10	14	5	15	50	24	9	37
024189	V41 06 18C	6	1/8”	13	14	5	15	50	26	9	41
024190	V41 06 14C	6	1/4”	13	18	6,5	18	58	28	10	63
024191	V41 08 18C	8	1/8”	15	14	5	15	50	28	9	45
024192	V41 08 14C	8	1/4”	15	18	6,5	18	58	28	10	62
024193	V41 10 14C	10	1/4”	18	18	6,5	18	58	32	10	93

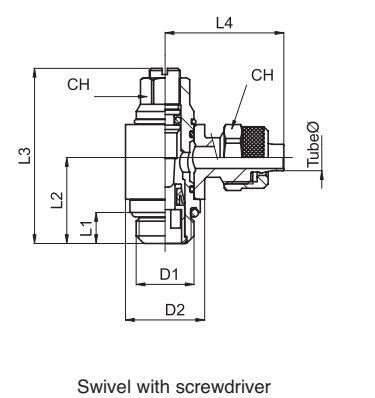

Swivel with screwdriver
adjustment and rapid fitting

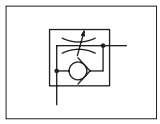

For cylinder

Code	Item	Tube ø	D_1	D_2	L_1	L_2	L_3 max	L_4	CH_1	CH_2	gr.
024141	V20 04 M5C	4-2,5	M5	10	4	11,5	28	15,5	6	7	12
024144	V20 06 M5C	6-4	M5	10	4	11,5	28	19	6	9	12
024145	V20 06 18C	6-4	1/8”	14	5	15	36	25	9	12	40
024146	V20 06 14C	6-4	1/4”	18	6,5	18	42	26,5	10	12	53
024147	V20 08 18C	8-6	1/8”	14	5	15	36	25	9	14	42
024148	V20 08 14C	8-6	1/4”	18	6,5	18	42	27,5	10	14	68
024149	V20 10 14C	10-8	1/4”	18	6,5	18	42	28,5	10	16	57

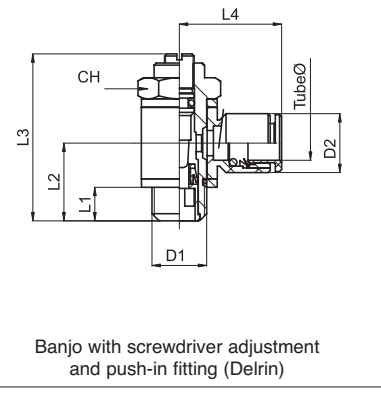

Banjo with screwdriver adjustment
and push-in fitting (Delrin)

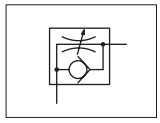

For cylinder

Code	Item	Tube ø	D_1	D_2	L_1	L_2	L_3 max	L_4	CH	g
024100	V39 04 M5C	4	M5	9,7	6	11	23,5	17	8	7
024101	V39 04 18C	4	1/8”	9,7	7	16	36	18,5	14	20
024109	V39 06 M5C	6	M5	12	6	11	23,5	20,5	8	8
024103	V39 06 18C	6	1/8”	12	7	16	36	22	14	22
024104	V39 06 14C	6	1/4”	12	9	19	42	23,5	17	38
024105	V39 08 18C	8	1/8”	14	7	16	36	22,5	14	22
024106	V39 08 14C	8	1/4”	14	9	19	42	24	17	39
024110	V39 08 38C	8	3/8”	14	10	22	52	26	20	67
024107	V39 10 14C	10	1/4”	16,5	9	19	42	26	17	39
024108	V39 10 38C	10	3/8”	16,5	10	22	52	28	20	68

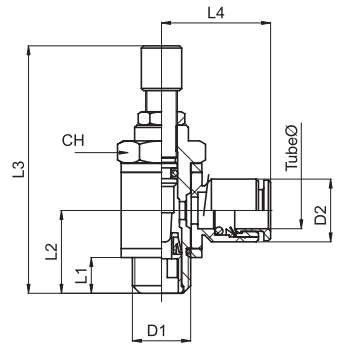

Banjo with manual adjustment
and push-in fitting (Delrin)

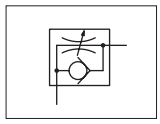

For cylinder

Code	Item	Tube ø	D_1	D_2	L_1	L_2	L_3 max	L_4	CH	g
024311	V37 04 M5C	4	M5	9,7	4	11	38,5	17	8	9
024312	V37 04 18C	4	1/8”	9,7	6	16	50	18,5	14	23
024313	V37 06 M5C	6	M5	12	4	11	38,5	20,5	8	10
024314	V37 06 18C	6	1/8”	12	6	16	50	22	14	25
024315	V37 06 14C	6	1/4”	12	8	19	58	23,5	17	41
024316	V37 08 18C	8	1/8”	14	6	16	50	22,5	14	25
024317	V37 08 14C	8	1/4”	14	8	19	58	24	17	42
024318	V37 08 38C	8	3/8”	14	9	22	72	26	20	70
024319	V37 10 14C	10	1/4”	16,5	8	19	58	26	17	42
024320	V37 10 38C	10	3/8”	16,5	9	22	72	28	20	71

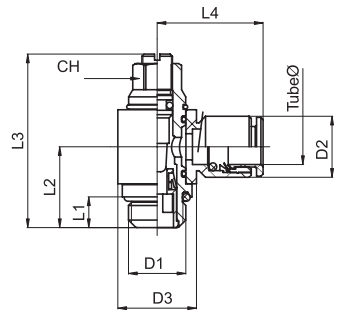

Swivel with screwdriver adjustment
and push-in fitting (Delrin)

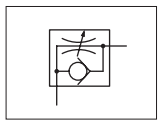

For cylinder

Code	Item	Tube ø	D_1	D_2	D_3	L_1	L_2	L_3 max	L_4	CH	g
024201	V38 04 M5C	4	M5	9,7	9,7	4	11,5	28	17	6	8
024202	V38 04 18C	4	1/8”	9,7	15	5	15	36	18,5	9	17
024208	V38 06 M5C	6	M5	12	9,7	4	11,5	28	20,5	6	9
024203	V38 06 18C	6	1/8”	12	15	5	15	36	22	9	18
024204	V38 06 14C	6	1/4”	12	18	6,5	18	42	23,5	10	31
024205	V38 08 18C	8	1/8”	14	15	5	15	36	22,5	9	20
024206	V38 08 14C	8	1/4”	14	18	6,5	18	42	24	10	32
024207	V38 10 14C	10	1/4”	16,5	18	6,5	18	42	26,5	10	33

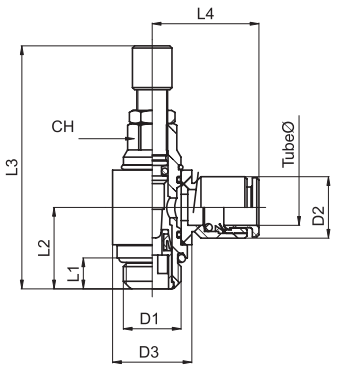

Swivel with manual adjustment
and push-in fitting (Delrin)

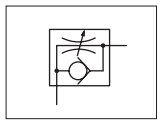

For cylinder

Code	Item	Tube ø	D_1	D_2	D_3	L_1	L_2	L_3 max	L_4	CH	g
024331	V36 04 M5C	4	M5	9,7	9,7	4	11,5	39	17	6	10
024332	V36 04 18C	4	1/8”	9,7	15	5	15	50	18,5	9	20
024333	V36 06 M5C	6	M5	12	9,7	4	11,5	39	20,5	6	11
024334	V36 06 18C	6	1/8”	12	15	5	15	50	22	9	21
024335	V36 06 14C	6	1/4”	12	18	6,5	18	58	23,5	10	34
024336	V36 08 18C	8	1/8”	14	15	5	15	50	22,5	9	23
024337	V36 08 14C	8	1/4”	14	18	6,5	18	58	24	10	35
024338	V36 10 14C	10	1/4”	16,5	18	6,5	18	58	26	10	36

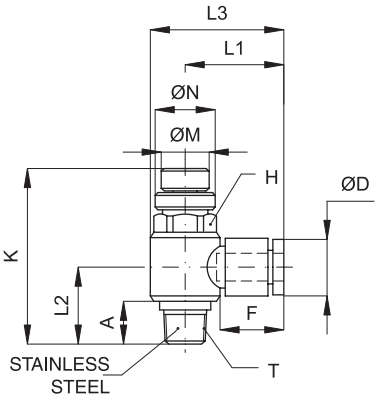

Swivel with manual adjustment
and push-in fitting

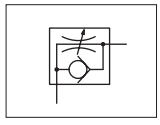

For cylinder

Code	Item	Tube ø	T	L_1	L_3	Kmin	Kmax	A	H	N	M	D
848201	V50 04 18C	4	1/8”	22,5	29,7	41	46	10	13	13	10	9,7
848202	V50 06 18C	6	1/8”	22,5	29,7	41	46	10	13	13	10	12,5
848203	V50 06 14C	6	1/4”	24,5	34,2	48,5	55	14	17	13	10	12,5
848204	V50 08 18C	8	1/8”	24	31,2	41	46	10	13	13	10	14,5
848205	V50 08 14C	8	1/4”	26	35,7	48,5	55	14	17	13	10	14,5
848206	V50 08 38C	8	3/8”	28	40	51,5	59	14,5	21	16	13	14,5
848207	V50 10 14C	10	1/4”	29	38,7	48,5	55	14	17	13	10	17,5
848208	V50 10 38C	10	3/8”	31	43	51,5	59	14,5	21	16	13	17,5
848209	V50 12 38C	12	3/8”	34,5	48,5	51,5	59	14,5	24	16	13	20
848210	V50 12 12C	12	1/2”	-	-	-	-	-	-	-	-	

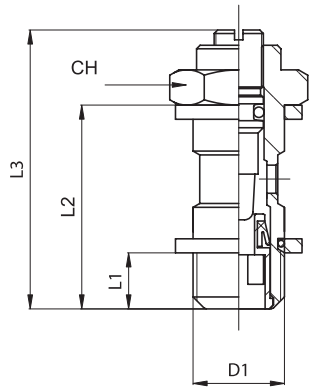

Banjo bolt with screwdriver adjustment

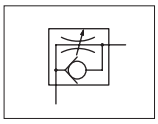

For valve

Code	Item	D_1	L_1	L_2	L_3 max	CH	g
024031	V15 00 M5V	M5	4	16	23,5	8	5
024032	V15 00 18V	1/8”	6	25	36	14	16
024033	V15 00 14V	1/4”	8	29	42	17	32
024034	V15 00 38V	3/8”	9	33	52	20	59

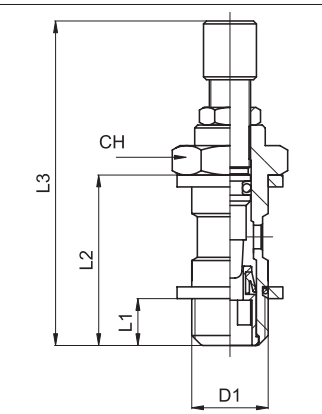

Banjo bolt with manual adjustment

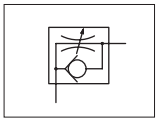

For valve

Code	Item	D_1	L_1	L_2	L_3 max	CH	g
024341	V14 00 M5V	M5	4	16	38,5	8	7
024342	V14 00 18V	1/8”	6	25	50	14	22
024343	V14 00 14V	1/4”	8	29	58	17	38
024344	V14 00 38V	3/8”	9	33	72	20	67

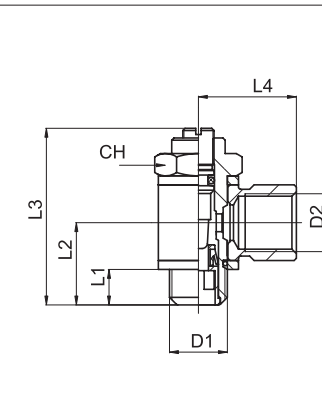

Banjo BSP with screwdriver adjustment

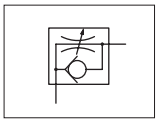

For valve

Code	Item	D_1	D_2	L_1	L_2	L_3 max	L_4	CH	g
024067	V17 00 M5V	M5	M5	4	11	23,5	11	8	12
024068	V17 00 18V	1/8”	1/8”	6	16	36	17	14	34
024069	V17 00 14V	1/4”	1/4”	8	19	42	22	17	62
024070	V17 00 38V	3/8”	3/8”	9	22	52	26	20	98

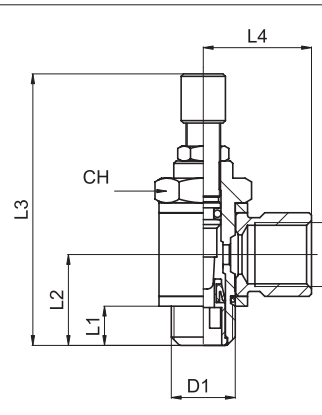

Banjo BSP with manual adjustment

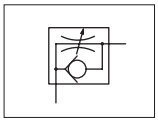

For valve

Code	Item	D_1	D_2	L_1	L_2	L_3 max	L_4	CH	g
024351	V40 00 M5V	M5	M5	4	11	38,5	11	8	14
024352	V40 00 18V	1/8”	1/8”	6	16	50	17	14	40
024353	V40 00 14V	1/4”	1/4”	8	19	58	22	17	68
024354	V40 00 38V	3/8”	3/8”	9	22	72	26	20	106

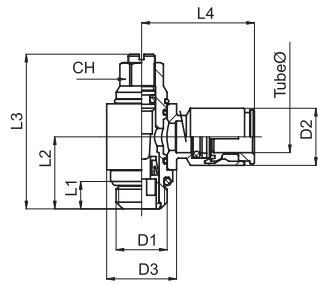

Swivel with screwdriver adjustment and push-in fitting

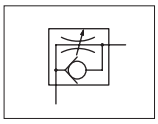

For valve

Code	Item	Tube ø	D_1	D_2	D_3	L_1	L_2	L_3 max	L_4	CH	gr.
024091	V18 04 M5V	4	M5	10	10	4	11,5	28	24	6	13
024092	V18 04 18V	4	1/8”	10	14	5	15	36	24	9	31
024095	V18 06 18V	6	1/8”	13	14	5	15	36	26	9	35
024096	V18 06 14V	6	1/4”	13	18	6,5	18	42	28	10	57
024097	V18 08 18V	8	1/8”	15	14	5	15	36	28	9	39
024098	V18 08 14V	8	1/4”	15	18	6,5	18	42	28	10	56
024099	V18 10 14V	10	1/4”	18	18	6,5	18	42	32	10	87

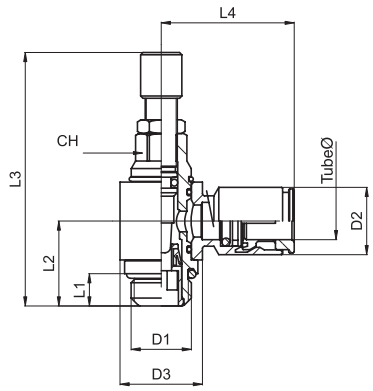

Swivel with manual adjustment and push-in fitting

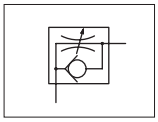

For valve

Code	Item	Tube ø	D_1	D_2	D_3	L_1	L_2	L_3 max	L_4	CH	gr.
024361	V41 04 M5V	4	M5	10	10	4	11,5	39	24	6	15
024362	V41 04 18V	4	1/8”	10	14	5	15	50	24	9	37
024365	V41 06 18V	6	1/8”	13	14	5	15	50	26	9	41
024366	V41 06 14V	6	1/4”	13	18	6,5	18	58	28	10	63
024367	V41 08 18V	8	1/8”	15	14	5	15	50	28	9	45
024368	V41 08 14V	8	1/4”	15	18	6,5	18	58	28	10	62
024369	V41 10 14V	10	1/4”	18	18	6,5	18	58	32	10	93

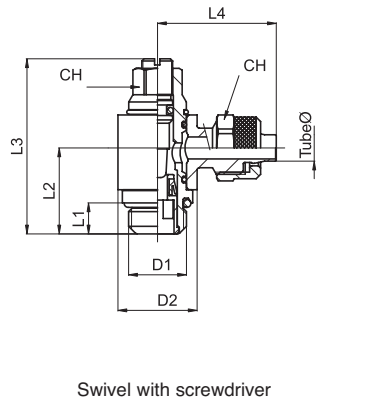

Swivel with screwdriver adjustment and rapid fitting

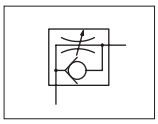

For valve

Code	Item	Tube ø	D_1	D_2	L_1	L_2	L_3 max	L_4	CH_1	CH_2	gr.
024151	V20 04 M5V	4-2,5	M5	10	4	11,5	28	15,5	6	7	12
024155	V20 06 18V	6-4	1/8”	14	5	15	36	25	9	12	40
024156	V20 06 14V	6-4	1/4”	18	6,5	18	42	26,5	10	12	53
024157	V20 08 18V	8-6	1/8”	14	5	15	36	25	9	14	42
024158	V20 08 14V	8-6	1/4”	18	6,5	18	42	27,5	10	14	68
024159	V20 10 14V	10-8	1/4”	18	6,5	18	42	28,5	10	16	57

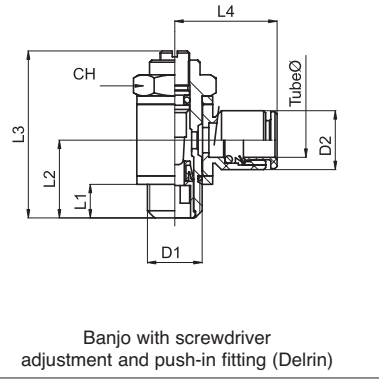

Banjo with screwdriver adjustment and push-in fitting (Delrin)

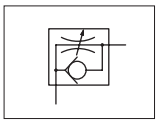

For valve

Code	Item	Tube ø	D_1	D_2	L_1	L_2	L_3 max	L_4	CH	g
024119	V39 04 M5V	4	M5	9,7	6	11	23,5	17	8	7
024111	V39 04 18V	4	1/8”	9,7	7	16	36	18,5	14	20
024230	V39 06 M5V	6	M5	12	6	11	23,5	20,5	8	8
024113	V39 06 18V	6	1/8”	12	7	16	36	22	14	22
024114	V39 06 14V	6	1/4”	12	9	19	42	23,5	17	38
024115	V39 08 18V	8	1/8”	14	7	16	36	22,5	14	22
024116	V39 08 14V	8	1/4”	14	9	19	42	24	17	39
024231	V39 08 38V	8	3/8”	14	10	22	52	26	20	67
024117	V39 10 14V	10	1/4”	16,5	9	19	42	26	17	39
024118	V39 10 38V	10	3/8”	16,5	10	22	52	28	20	68

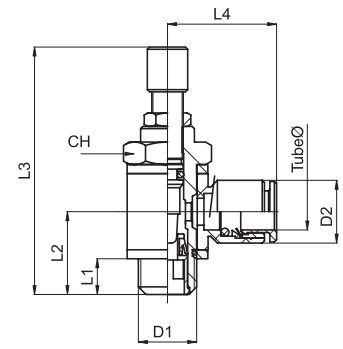

Banjo with manual
adjustment and push-in fitting (Delrin)

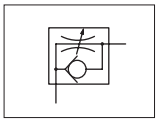

For valve

Code	Item	Tube ø	D_1	D_2	L_1	L_2	L_3 max	L_4	CH	g
024381	V37 04 M5V	4	M5	9,7	4	11	38,5	17	8	9
024382	V37 04 18V	4	1/8”	9,7	6	16	50	18,5	14	23
024383	V37 06 M5V	6	M5	12	4	11	38,5	20,5	8	10
024384	V37 06 18V	6	1/8”	12	6	16	50	22	14	25
024385	V37 06 14V	6	1/4”	12	8	19	58	23,5	17	41
024386	V37 08 18V	8	1/8”	14	6	16	50	22,5	14	25
024387	V37 08 14V	8	1/4”	14	8	19	58	24	17	42
024388	V37 08 38V	8	3/8”	14	9	22	72	26	20	70
024389	V37 10 14V	10	1/4”	16,5	8	19	58	26	17	42
024390	V37 10 38V	10	3/8”	16,5	9	22	72	28	20	71

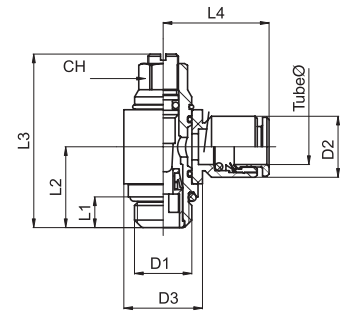

Swivel with screwdriver
adjustment and push-in fitting (Delrin)

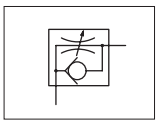

For valve

Code	Item	Tube ø	D_1	D_2	D_3	L_1	L_2	L_3 max	L_4	CH	g
024211	V38 04 M5V	4	M5	9,7	9,7	4	11,5	28	17	6	8
024212	V38 04 18V	4	1/8”	9,7	15	5	15	36	18,5	9	17
024218	V38 06 M5V	6	M5	12	9,7	4	11,5	28	20,5	6	9
024213	V38 06 18V	6	1/8”	12	15	5	15	36	22	9	18
024214	V38 06 14V	6	1/4”	12	18	6,5	18	42	23,5	10	31
024215	V38 08 18V	8	1/8”	14	15	5	15	36	22,5	9	20
024216	V38 08 14V	8	1/4”	14	18	6,5	18	42	24	10	32
024217	V38 10 14V	10	1/4”	16,5	18	6,5	18	42	26,5	10	33

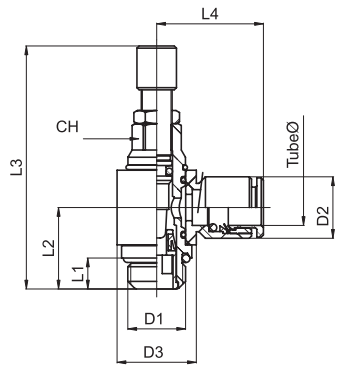

Swivel with manual
adjustment and push-in fitting (Delrin)

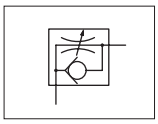

For valve

Code	Item	Tube ø	D_1	D_2	D_3	L_1	L_2	L_3 max	L_4	CH	g
024401	V36 04 M5V	4	M5	9,7	9,7	4	11,5	39	17	6	10
024402	V36 04 18V	4	1/8”	9,7	15	5	15	50	18,5	9	20
024403	V36 06 M5V	6	M5	12	9,7	4	11,5	39	20,5	6	11
024404	V36 06 18V	6	1/8”	12	15	5	15	50	22	9	21
024405	V36 06 14V	6	1/4”	12	18	6,5	18	58	23,5	10	34
024406	V36 08 18V	8	1/8”	14	15	5	15	50	22,5	9	23
024407	V36 08 14V	8	1/4”	14	18	6,5	18	58	24	10	35
024408	V36 10 14V	10	1/4”	16,5	18	6,5	18	58	26	10	36

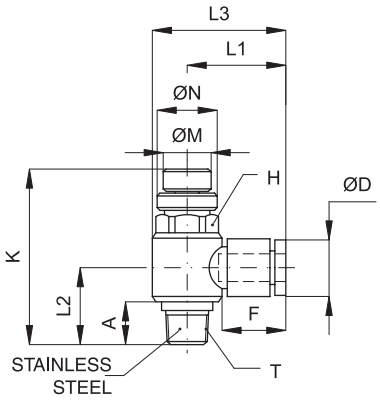

Swivel with manual adjustment and push-in fitting

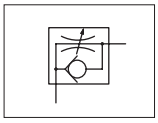

For valve

Code	Item	Tube ø	T	L_1	L_3	Kmin	Kmax	A	H	N	M	D
848211	V50 04 18V	4	1/8”	22,5	29,7	41	46	10	13	13	10	9,7
848212	V50 06 18V	6	1/8”	22,5	29,7	41	46	10	13	13	10	12,5
848213	V50 06 14V	6	1/4”	24,5	34,2	48,5	55	14	17	13	10	12,5
848214	V50 08 18V	8	1/8”	24	31,2	41	46	10	13	13	10	14,5
848215	V50 08 14V	8	1/4”	26	35,7	48,5	55	14	17	13	10	14,5
848216	V50 08 38V	8	3/8”	28	40	51,5	59	14,5	21	16	13	14,5
848217	V50 10 14V	10	1/4”	29	38,7	48,5	55	14	17	13	10	17,5
848218	V50 10 38V	10	3/8”	31	43	51,5	59	14,4	21	16	13	17,5
848219	V50 12 38V	12	3/8”	34,5	48,5	51,5	59	14,5	24	16	13	20
848220	V50 12 12V	12	1/2”	-	-	-	-	-	-	-	-	-

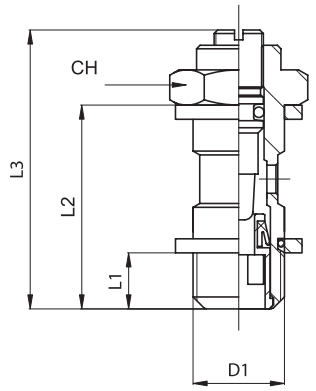

Banjo bolt with screwdriver adjustment

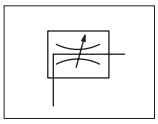

Bi-directional

Code	Item	D_1	L_1	L_2	L_3 max	CH	g
024001	V15 00 M5B	M5	4	16	23,5	8	5
024002	V15 00 18B	1/8”	6	25	36	14	16
024003	V15 00 14B	1/4”	8	29	42	17	32
024004	V15 00 38B	3/8”	9	33	52	20	59
024005	V15 00 12B	1/2”	10	39	61	26	108

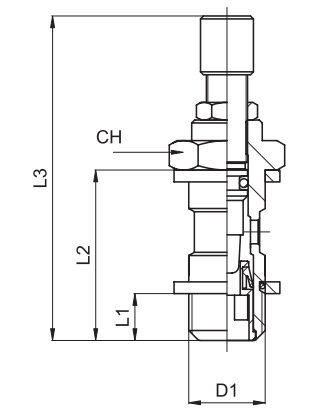

Banjo bolt with manual adjustment

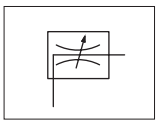

Bi-directional

Code	Item	D_1	L_1	L_2	L_3 max	CH	g
024411	V14 00 M5B	M5	4	16	38,5	8	7
024412	V14 00 18B	1/8”	6	25	50	14	22
024413	V14 00 14B	1/4”	8	29	58	17	38
024414	V14 00 38B	3/8”	9	33	72	20	67
024415	V14 00 12B	1/2”	10	39	81	26	121

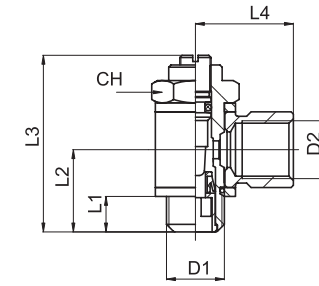

Banjo BSP with screwdriver adjustment

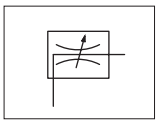

Bi-directional

Code	Item	D_1	D_2	L_1	L_2	L_3 max	L_4	CH	g
024073	V17 00 M5B	M5	M5	4	11	23,5	11	8	12
024074	V17 00 18B	1/8”	1/8”	6	16	36	17	14	34
024075	V17 00 14B	1/4”	1/4”	8	19	42	22	17	62
024076	V17 00 38B	3/8”	3/8”	9	22	52	26	20	98
024077	V17 00 12B	1/2”	1/2”	10	25	61	32	26	176

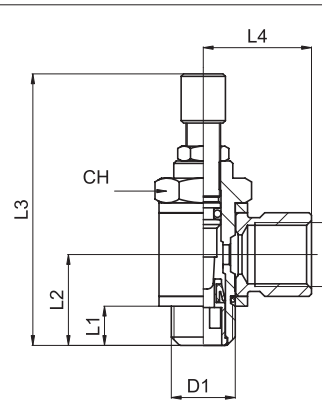

Banjo BSP with manual adjustment

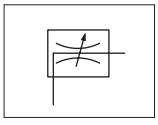

Bi-directional

Code	Item	D_1	D_2	L_1	L_2	L_3 max	L_4	CH	g
024421	V40 00 M5B	M5	M5	4	11	38,5	11	8	14
024422	V40 00 18B	1/8”	1/8”	6	16	50	17	14	40
024423	V40 00 14B	1/4”	1/4”	8	19	58	22	17	68
024424	V40 00 38B	3/8”	3/8”	9	22	72	26	20	106
024425	V40 00 12B	1/2”	1/2”	10	25	81	32	26	189

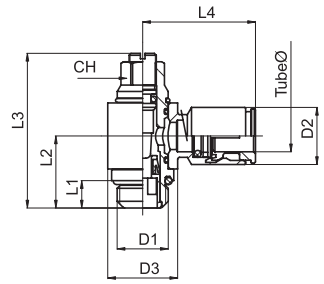

Swivel with screwdriver adjustment and push-in fitting

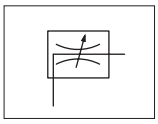

Bi-directional

Code	Item	Tube ø	D_1	D_2	D_3	L_1	L_2	L_3 max	L_4	CH	gr.
024131	V18 04 M5B	4	M5	10	10	4	11,5	28	24	6	13
024132	V18 04 18B	4	1/8”	10	14	5	15	36	24	9	31
024135	V18 06 18B	6	1/8”	13	14	5	15	36	26	9	35
024136	V18 06 14B	6	1/4”	13	18	6,5	18	42	28	10	57
024137	V18 08 18B	8	1/8”	15	14	5	15	36	28	9	39
024138	V18 08 14B	8	1/4”	15	18	6,5	18	42	28	10	56
024139	V18 10 14B	10	1/4”	18	18	6,5	18	42	32	10	87

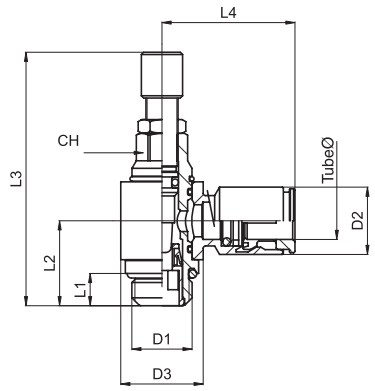

Swivel with manual adjustment and push-in fitting

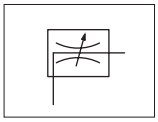

Bi-directional

Code	Item	Tube ø	D_1	D_2	D_3	L_1	L_2	L_3 max	L_4	CH	gr.
024431	V41 04 M5B	4	M5	10	10	4	11,5	39	24	6	15
024432	V41 04 18B	4	1/8”	10	14	5	15	50	24	9	37
024435	V41 06 18B	6	1/8”	13	14	5	15	50	26	9	41
024436	V41 06 14B	6	1/4”	13	18	6,5	18	58	28	10	63
024437	V41 08 18B	8	1/8”	15	14	5	15	50	28	9	45
024438	V41 08 14B	8	1/4”	15	18	6,5	18	58	28	10	62
024439	V41 10 14B	10	1/4”	18	18	6,5	18	58	32	10	93

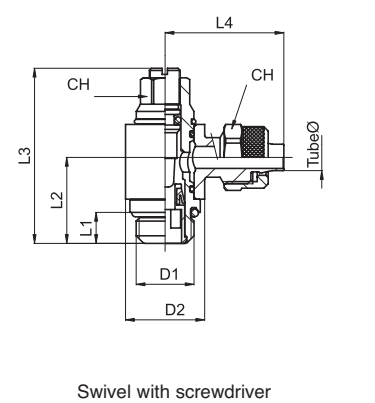

Swivel with screwdriver adjustment and rapid fitting

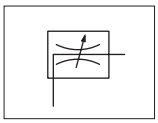

Bi-directional

Code	Item	Tube ø	D_1	D_2	L_1	L_2	L_3 max	L_4	CH_1	CH_2	gr.
024161	V20 04 M5B	4-2,5	M5	10	4	11,5	28	15,5	6	7	12
024164	V20 06 M5B	6-4	M5	10	4	11,5	28	19	6	9	12
024165	V20 06 18B	6-4	1/8”	14	5	15	36	25	9	12	40
024166	V20 06 14B	6-4	1/4”	18	6,5	18	42	26,5	10	12	53
024167	V20 08 18B	8-6	1/8”	14	5	15	36	25	9	14	42
024168	V20 08 14B	8-6	1/4”	18	6,5	18	42	27,5	10	14	68
024169	V20 10 14B	10-8	1/4”	18	6,5	18	42	28,5	10	16	57

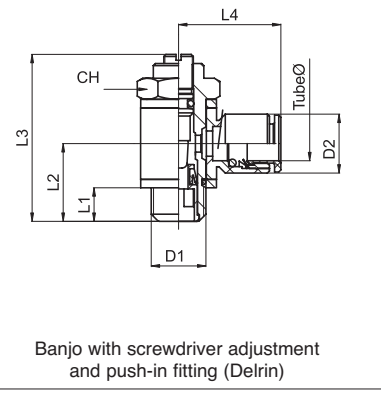

Banjo with screwdriver adjustment and push-in fitting (Delrin)

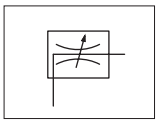

Bi-directional

Code	Item	Tube ø	D_1	D_2	L_1	L_2	L_3 max	L_4	CH	g
024120	V39 04 M5B	4	M5	9,7	6	11	23,5	17	8	7
024121	V39 04 18B	4	1/8”	9,7	7	16	36	18,5	14	20
024129	V39 06 M5B	6	M5	12	6	11	23,5	20,5	8	8
024123	V39 06 18B	6	1/8”	12	7	16	36	22	14	22
024124	V39 06 14B	6	1/4”	12	9	19	42	23,5	17	38
024125	V39 08 18B	8	1/8”	14	7	16	36	22,5	14	22
024126	V39 08 14B	8	1/4”	14	9	19	42	24	17	39
024130	V39 08 38B	8	3/8”	14	10	22	52	26	20	67
024127	V39 10 14B	10	1/4”	16,5	9	19	42	26	17	39
024128	V39 10 38B	10	3/8”	16,5	10	22	52	28	20	68

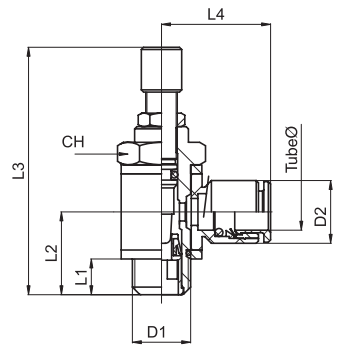

Banjo with manual adjustment
and push-in fitting (Delrin)

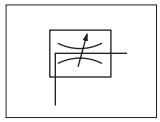

Bi-directional

Code	Item	Tube ø	D_1	D_2	L_1	L_2	L_3 max	L_4	CH	g
024451	V37 04 M5B	4	M5	9,7	4	11	38,5	17	8	9
024452	V37 04 18B	4	1/8”	9,7	6	16	50	18,5	14	23
024453	V37 06 M5B	6	M5	12	4	11	38,5	20,5	8	10
024454	V37 06 18B	6	1/8”	12	6	16	50	22	14	25
024455	V37 06 14B	6	1/4”	12	8	19	58	23,5	17	41
024456	V37 08 18B	8	1/8”	14	6	16	50	22,5	14	25
024457	V37 08 14B	8	1/4”	14	8	19	58	24	17	42
024458	V37 08 38B	8	3/8”	14	9	22	72	26	20	70
024459	V37 10 14B	10	1/4”	16,5	8	19	58	26	17	42
024460	V37 10 38B	10	3/8”	16,5	9	22	72	28	20	71

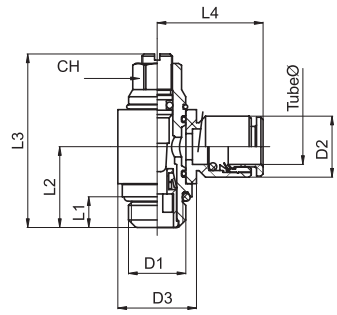

Swivel with screwdriver adjustment
and push-in fitting (Delrin)

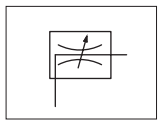

Bi-directional

Code	Item	Tube ø	D_1	D_2	D_3	L_1	L_2	L_3 max	L_4	CH	g
024221	V38 04 M5B	4	M5	9,7	9,7	4	11,5	28	17	6	8
024222	V38 04 18B	4	1/8”	9,7	15	5	15	36	18,5	9	17
024227	V38 06 M5B	6	M5	12	9,7	4	11,5	28	20,5	6	9
024223	V38 06 18B	6	1/8”	12	15	5	15	36	22	9	18
024224	V38 06 14B	6	1/4”	12	18	6,5	18	42	23,5	10	31
024225	V38 08 18B	8	1/8”	14	15	5	15	36	22,5	9	20
024226	V38 08 14B	8	1/4”	14	18	6,5	18	42	24	10	32
024228	V38 10 14B	10	1/4”	16,5	18	6,5	18	42	26,5	10	33

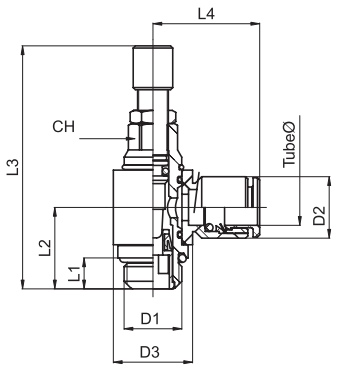

Swivel with manual adjustment
and push-in fitting (Delrin)

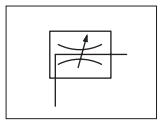

Bi-directional

Code	Item	Tube ø	D_1	D_2	D_3	L_1	L_2	L_3 max	L_4	CH	g
024481	V36 04 M5B	4	M5	9,7	9,7	4	11,5	39	17	6	10
024482	V36 04 18B	4	1/8”	9,7	15	5	15	50	18,5	9	20
024483	V36 06 M5B	6	M5	12	9,7	4	11,5	39	20,5	6	11
024484	V36 06 18B	6	1/8”	12	15	5	15	50	22	9	21
024485	V36 06 14B	6	1/4”	12	18	6,5	18	58	23,5	10	34
024486	V36 08 18B	8	1/8”	14	15	5	15	50	22,5	9	23
024487	V36 08 14B	8	1/4”	14	18	6,5	18	58	24	10	35
024488	V36 10 14B	10	1/4”	16,5	18	6,5	18	58	26	10	36

Type: **V18 - V41**

Tube Ø 4x2,5

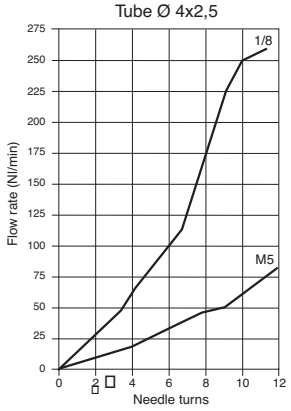

Tube Ø 6x4

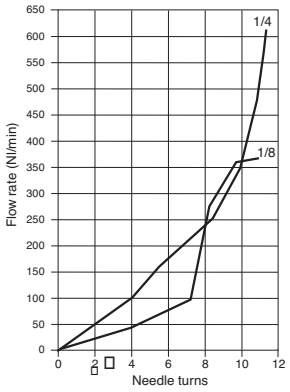

Tube Ø 8x6

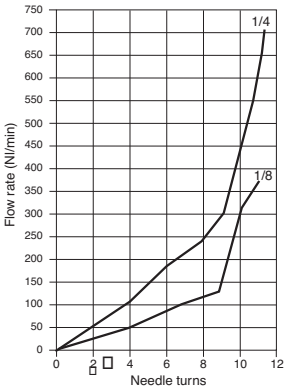

Tube Ø 10x8

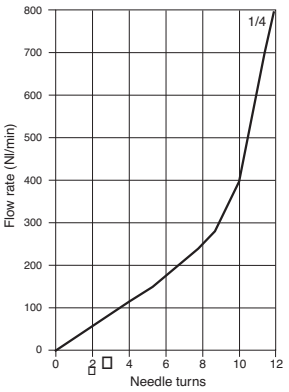

Type: **V20**

Tube Ø 4x2,5

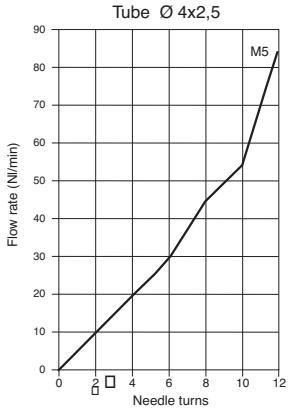

Tube Ø 6x4

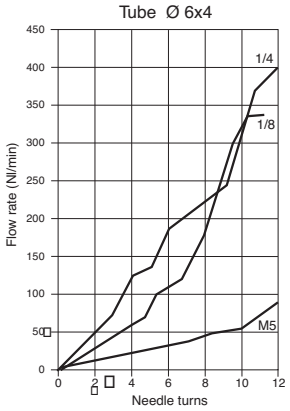

Tube Ø 8x6

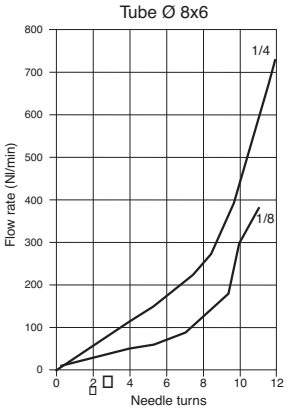

Tube Ø 10x8

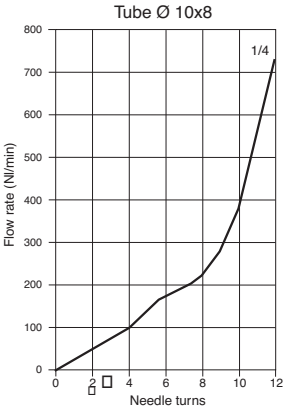

Type: **V37 - V39**

Tube Ø 4x2,5

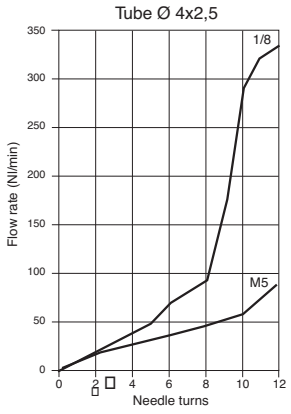

Tube Ø 6x4

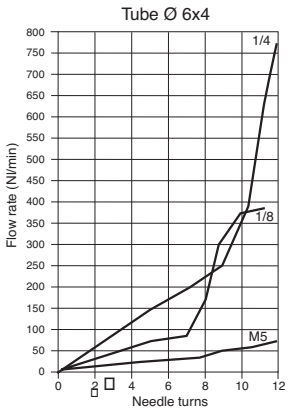

Tube Ø 8x6

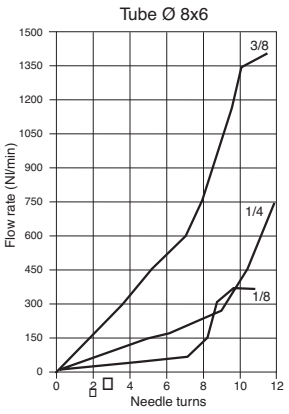

Tube Ø 10x8

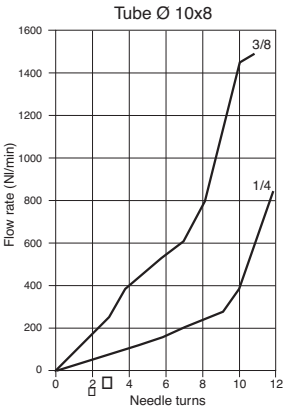

Type: **V36 - V38**

Tube Ø 4x2,5

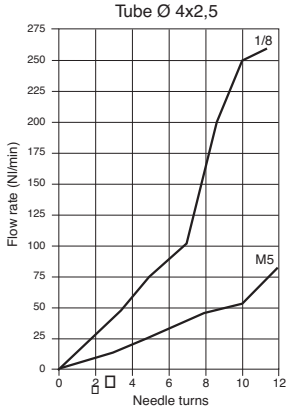

Tube Ø 6x4

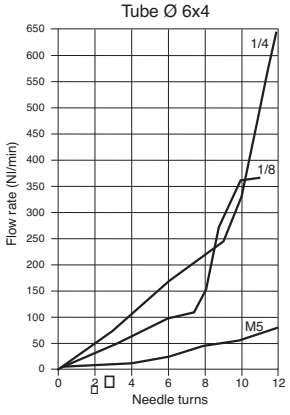

Tube Ø 8x6

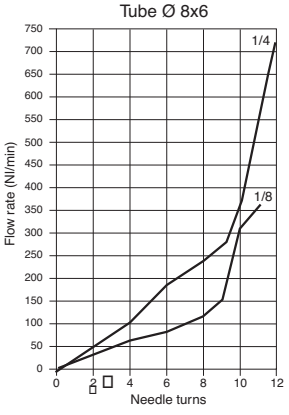

Tube Ø 10x8

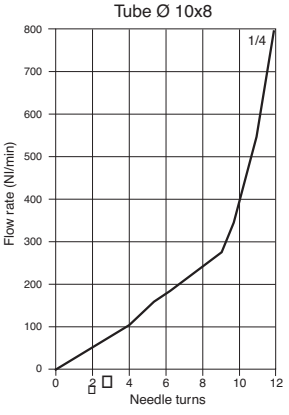

GENERAL INDEX
ACCESSORIES INDEX

Version	Symbol	Type
Manual, with external spring and right adjustment	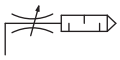	AVE
Manual, with internal spring and left adjustment		AVS
Manual, with internal spring		AVT
With screwdriver adjustment and high flow		AVL
With screwdriver adjustment		AVC

Options	Code
Completely nickel plated	N

Threads	M5	1/8”	1/4”	3/8”	1/2”	3/4”	1”
Code	M5	18	14	38	12	34	01



Series of silenced exhaust restrictors normally used to reduce the exhaust velocity and so the translation velocity of cylinders. They are normally applied to valve exhausts or quick exhaust valves.
They are characterised by including 2 functions in one item only: flow control and silencer.

* How to order: AVE18N

AVE	18	N
Type	Thread code	Option

* For standard items, codes and dimensions see tables at page 4.80.51.

4

Technical data		
Fluid	Compressed air	
Pressure range	0,5 ÷ 10 bar	
Temperature range	-20 °C ÷ + 70°C	
Parallel threads	UNI - ISO 228 / 1 (BSP)	
Metric threads	ISO R / 262	
Material	Body:	AVE - AVS - AVL in brass; AVT - AVC in nickel plated brass
	Filter element:	Sintered bronze 36 micron
	Spring:	Stainless stee
	Seals:	Nitrile rubber (NBR)

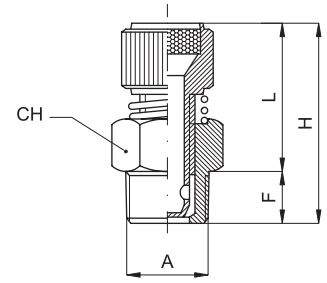

Manual with external spring and right adjustment

Code	Item	A	CH	F	L		H	
					min	max	min	max
023501	AVE18	1/8”	13	6	20	22	26	28
023502	AVE14	1/4”	15	8	22	24	30	32
023503	AVE38	3/8”	18	10	25	28	35	38
023504	AVE12	1/2”	22	11	26	29	36	39
023505	AVE34	3/4”	30	12	32	37	45	50
023506	AVE01	1”	36	12	32	37	45	50

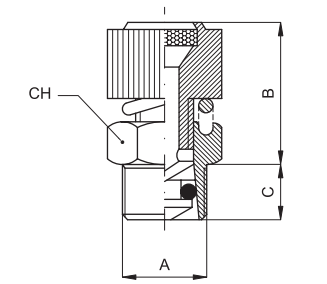

Manual with internal spring and left adjustment

Code	Item	A	B		C	CH
			min	max		
023521	AVS18	1/8”	14	19	6	13
023522	AVS14	1/4”	17	22	8	16
023523	AVS38	3/8”	18	24	9	20
023524	AVS12	1/2”	18	24	10,5	26

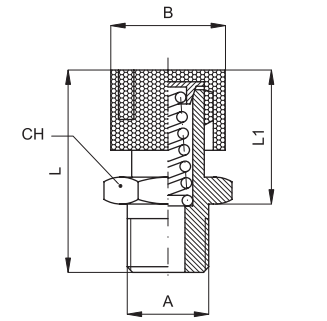

Manual with internal spring

Code	Item	A	B	L	L_1		CH
				max	min	max	
023561	AVT18	1/8”	14	29	16	21	14
023562	AVT14	1/4”	17	33	17	24	17
023564	AVT12	1/2”	26	43	25	31	26

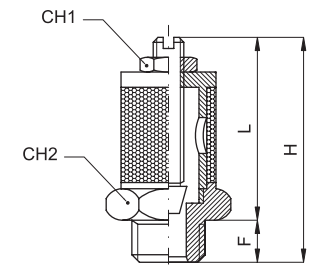

With screwdriver adjustment and high flow

Code	Item	A	F	CH_1	CH_2	L		H	
						min	max	min	max
023541	AVL18	1/8”	8	10	16	20	22	26	28
023542	AVL14	1/4”	9	10	16	22	24	30	32
023543	AVL38	3/8”	10	10	22	25	28	35	38
023544	AVL12	1/2”	11	10	22	26	29	36	39
023545	AVL34	3/4”	11	13	30	32	37	45	50
023546	AVL01	1”	11	13	36	32	37	45	50
023547	AVL05	5MA	3,5	6	8	13	18	16	21

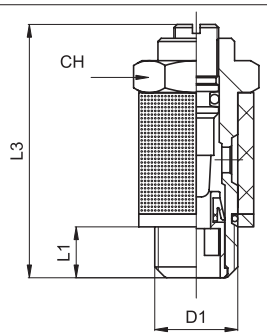

With screwdriver adjustment

Code	Item	D_1	L_1	L_2	CH	g
				max		
023571	AVCM5	M5	4	23,5	8	6
023572	AVC18	1/8”	6	36	14	28
023573	AVC14	1/4”	8	42	17	52
023574	AVC38	3/8”	9	52	20	96

Version	Symbol	Type
With female thread for mounting the silencer		ASN
With precision screwdriver adjustment		ASP
With precision manual adjustment		ASPM
With manual adjustment and high flow		ASE
Manual shut off		AR

Threads	1/8”	1/4”	3/8”	1/2”
Code	18	14	38	12



Series of exhaust restrictors normally used to reduce the translation velocity of cylinders.
They are normally applied to valve exhausts or quick exhaust valves.

* How to order: ASP18

ASP	18
Type	Thread code

* For standard items, codes and dimensions see tables at page 4.80.82.

Technical data	
Fluid	Compressed air
Pressure range	0 ÷ 10 bar
Temperature range	-20 °C ÷ + 70°C
Parallel threads	UNI - ISO 228 / 1 (BSP)
Materials	Body: Nickel plated brass Needle: ASP - ASPM in brass - ASE in nickel plated brass

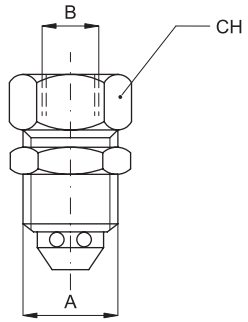

With female thread for mounting the silencer

Code	Item	A	B	C
023581	ASN1818	1/8”	1/8”	15
023582	ASN1418	1/4”	1/8”	19
023583	ASN3814	3/8”	1/4”	20
023584	ASN1214	1/2”	1/4”	20
023585	ASN1238	1/2”	3/8”	26

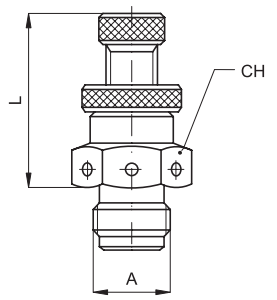

With manual adjustment and high flow

Code	Item	A	L	CH
023621	ASE18	1/8”	18	14
023622	ASE14	1/4”	22	17

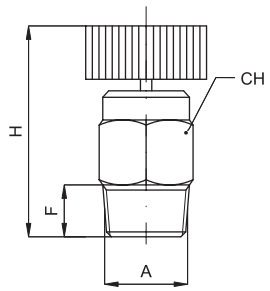

Manual shut off

Code	Item	A	F	H	CH
023633	AR18B	1/8”	8	28	14
023634	AR14B	1/4”	9	27	14
023635	AR38B	3/8”	9	24	17

Accessories with integrated function

Fittings with non return valve

Version	Symbol	Type
Stud push-in fitting		V56



External tube ø (mm)	4	6	8	10	12	14
Code	04	06	08	10	12	14

Threads	M5	1/8”	1/4”	3/8”	1/2”
Code	M5	18	14	38	12

Series of push-in fittings with non return valve to control flow. This valve permits unrestricted flow in one direction only (from tube to thread) while intercepts flow from thread to tube.

How to order: V560618

V56	06	18
Type	Tube code	Thread code

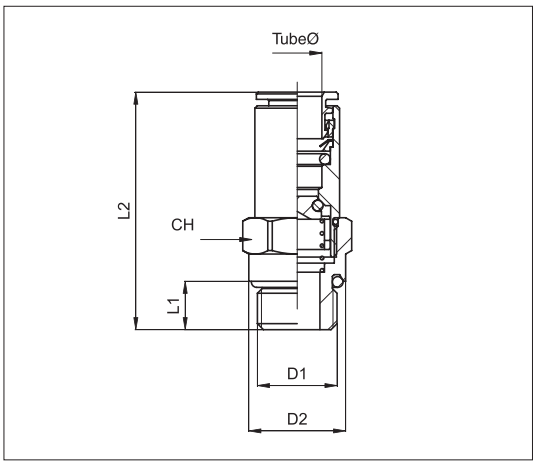

Code	Item	Tube ø	D_1	D_2	L_1	L_2	CH	g
024490	V5604M5	4	M5	8	4	37,5	9	10
024491	V560418	4	1/8”	13	6	31	11	13
024492	V560618	6	1/8”	13	6	38	13	18
024493	V560614	6	1/4”	16	8	39	14	26
024494	V560818	8	1/8”	13	6	39	15	23
024495	V560814	8	1/4”	16	8	40	16	27
024496	V561014	10	1/4”	16	8	43	18	36
024497	V561038	10	3/8”	20	9	43	18	42
024498	V561212	12	1/2”	25	10	47	22	68
024499	V561412	14	1/2”	25	10	54	25	90

Technical data	
Fluid	Compressed air
Pressure range	0,5 ÷ 12 bar
Temperature range	-20 °C ÷ + 70°C
Parallel threads	UNI - ISO 228 / 1 (BSP)
Metric threads	ISO R / 262
Connection tubes	Calibrated nylon, polyurethane and rilsan
Tube tolerances	± 0,05 mm
Materials	Body and release collar: Nickel plated brass Valve: Brass Collet: Stainless steel Seals: Nitrile rubber (NBR)

Accessories with integrated function

Circuit selectors

Version	Symbol	Type
Circuit selector (OR)		V60



Threads	1/8”	1/4”
Code	18	14

Series of circuit selectors with ports 1/8” and 1/4”.
They are used to convey into a tube 2 pneumatic flows from 2 different tubes as not to interfere each other.
Pushing air into one of 2 inlet orifices it passes to the outlet orifice excluding the second one.

How to order: V601818

V60	18	18
Type	Thread code	Thread code

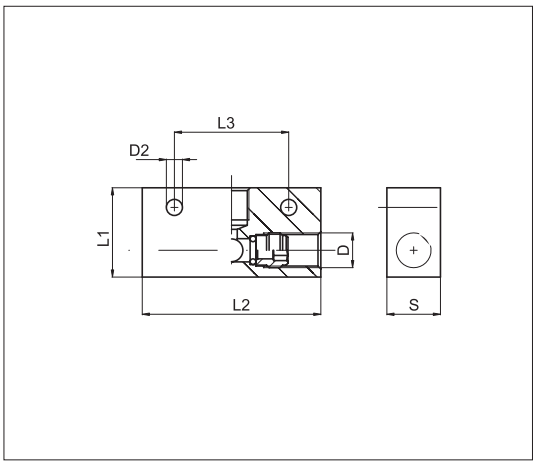

Code	Item	D	D_2	L_1	L_2	L_3	S	g
024348	V601818	1/8”	4,5	25	50	32	15	50
024349	V601414	1/4”	5,5	30	52	35	25	74

Technical data		
Fluid	Compressed air	
Pressure range	0,5 ÷ 12 bar	
Temperature range	-20 °C ÷ + 70°C	
Parallel threads	UNI - ISO 228 / 1 (BSP)	
Materials	Body:	Anodised aluminium
	Seals:	Nitrile rubber (NBR)

Version	Symbol	Type
In-line, with push-in fitting	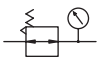	V57
90°, with male thread on inlet and push-in fitting on outlet		V58

External tube ø (mm)	4	6	8
Code	04	06	08

Threads	M5	1/8”	1/4”
Code	M5	18	14





Series of unidirectional pressure regulators with reduced dimensions, provided with micropressure-gauge (with scale Mpa). They must be used to reduce working pressure directed to a specific element.

How to order: V580618

V56	06	18
Type	Tube code	Thread or tube code

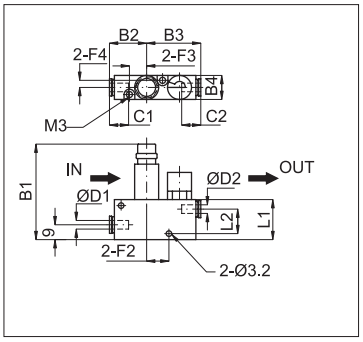

Code	Item	Tube ø D_1	Tube ø D_2	B_1 Max	B_1 Min	B_2	B_3	B_4	L_1	L_2	C_1	C_2	F_1	F_2	F_3	F_4	g
024357	V570404	4	4	63	69	22	33	15	25	15	11,5	11,5	17	15	10	4,5	47,5
024358	V570606	6	6			22,5	33,5				12	12					
024359	V570808	8	8	67,5	63,5	28,5	40,5	19	29	17	18,5	18,5	21	19,5	11,5	6,5	73

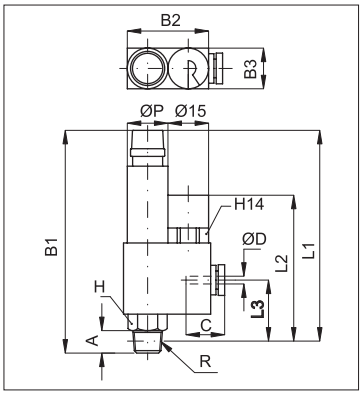

Code	Item	Tube ø D	R	A	B_1 Max	B_1 Min	B_2	B_3	L_1 Max	L_1 Min	L_2	L_3	ø P	C	H	g
024462	V5804M5	4	M5	3,5	57,5	53,5	27,5	15	54	50	42	12	11	11	8	27,5
024463	V580418		1/8”	8	81,5	77,5	36		77,5	73,5	51,5	18,5	15	15	12	54,5
024464	V5806M5	6	M5	3,5	57,5	53,5	28	15	54	50	42	12	11	11,5	8	27,5
024465	V580618		1/8”	8	81,5	77,5	36,5		77,5	73,5	51,5	18,5	15	17	12	54,5
024466	V580614		1/4”	11	89,5	85,5	39,5	19	83,5	79,5	57	22,5	19		16	83,5
024467	V580818	8	1/8”	8	81,5	77,5	36,5	15	77,5	73,5	51,5	18,5	15	18	12	55
024468	V580814		1/4”	11	89,5	85,5	39,5	19	83,5	79,5	57	22,5	19		16	83,5

Technical data

Fluid	Compressed air
Pressure range	1 ÷ 8 bar
Temperature range	0 °C ÷ + 60°C
Taper threads	UNI - ISO 7 / 1 (BSPT)
Metric threads	ISO R / 262
Connection tubes	Calibrated nylon, polyurethane and rilsan
Tube tolerances	± 0,05 mm
Materials	Body: Acetal resin Metal thread: Nickel plated brass Collet: Stainless steel Seals: Nitrile rubber (NBR)

Accessories with integrated function

Adjustable pressure switches

Version	Symbol	Code	Item
Normally open	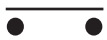	024391	PR18A
Normally closed		024392	PR18C



Series of adjustable pressure switches used in pneumatics to check the min. or max. pressure of compressed air into a control or a feeding circuit of a machine.
These pressure switches have been equipped with N.O./N.C. contact able to bear 6 A electric load at 220 Vac voltage and work directly with both inductive and resistive loads without any other accessory circuit.
It is advisable to fix the pressure switch vertically on the line to be checked to avoid that any impurity or condense inside the inlet could affect the correct working.
By means of the adjusting screw it is possible to reset the response value but by taking away before the bush of the cap.

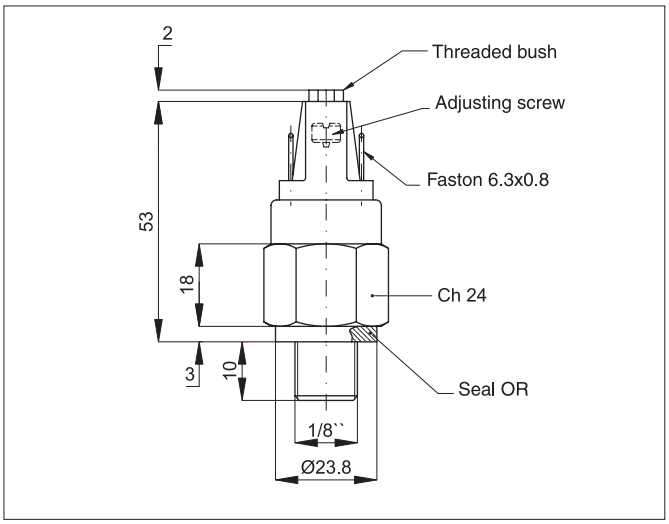

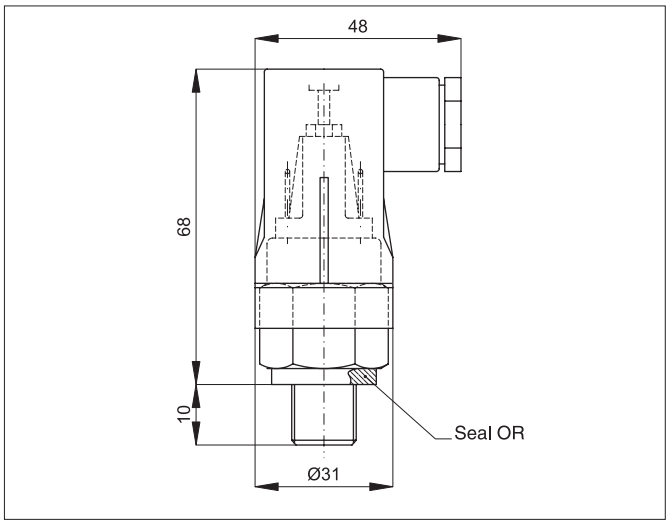

Technical data		
Fluid	Compressed filtered air with or without lubrication	
Working range	1 ÷ 10 bar	
Max pressure	30 bar	
Port	1/8" (BSP)	
Maximum voltage	250 Vca	
Working voltage	220 Vca	
Resistive load	6 A	
Inductive load at cos ø 0.4	2 A	
Resistive load at 24 Vdc	4 A	
Inductive load S/D 50 m/s	1 A/24 Vdc	
Insulation class	Group C according to VDE0110	
Protection without cap	IP 00	
Protection with cap	IP 65	
Changeover at half scale	10 % V.E.	
Temperature range	- 10 °C ÷ + 80 °C	
Max no. of strokes at 25 °C	120/1' at diaphragm	
Mechanical life	10v cycles	
Locking torque	2 Kgm	
Materials	Body Ch24:	Blue anodised aluminium
	Silver plated electric contacts:	Ag. CdO
	Diaphragm:	HNBR
	Cap:	Black nylon
	Contact holder:	Pocan

GENERAL INDEX
ACCESSORIES INDEX

Executions			
Version	Symbol	Code	Item
1/8” Unidirectional	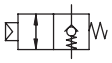	030133	V450018U
1/4” Unidirectional		030123	V450014U
3/8” Unidirectional		030124	V450038U
1/2” Unidirectional		030134	V450012U
1/8” Bidirectional	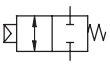	030135	V450018B
1/4” Bidirectional		030136	V450014B
3/8” Bidirectional		030137	V450038B
1/2” Bidirectional		030138	V450012B



Series of stop valves available uidirectional and bidirectional versions.
If assembled on both cylinder connections, in case should a sudden pressure failure happen, these will immediately stop any movement of the piston.

Options	Sigla
With recessed push-button for manual override reset	K

Note: The banjo to couple to the valve have to be ordered separately (R35 - RT28 - C23 - O25)

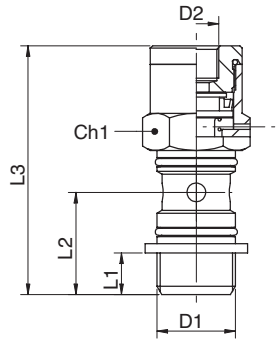

Version	L_1	L_2	L_3	D_1	D_2	CH_1	CH_2
1/8”	6	15,5	42	1/8	M5	13	8
1/4”	8	18,5	47	1/4	M5	17	8
3/8”	9	21	53,5	3/8	1/8	20	14
1/2”	10	24,5	60	1/2	1/8	25	14

Technical data						
Fluid	Compressed filtered air with or without lubrication					
Pressure range	max 10 bar					
Temperature range	-5 °C ÷ 70 °C					
Flow Nmin	Unidirectional	1/8” = 400	1/4” = 680	3/8” = 1300	1/2” = 2030	
	Bidirectional	1/8” = 630	1/4” = 930	3/8” = 2000	1/2” = 2500	
Materials	Body:	Nickel plated brass				
	Piston:	Stainless steel AISI 304				
	Spring:	Stainless steel AISI 302				
	Seals:	Nitrile rubber (NBR)				

Silencers
In acetal resin

Version	Symbol	Type
Dynamic (self-cleaning)		SPD
Static (with felt)		SPF



Series of acetal resin silencers applying to valve exhausts to reduce noise level.
The dynamic version is characterised by a flow little higher than the static one; but, on the other hand, this affects its capacity to reduce noise level.

Threads	1/8”	1/4”	3/8”	1/2”	3/4”	1”
Code	18	14	38	12	34	01

Colours	Blue	Yellow	Black	White
Code	BL	GI	NE	NT

* How to order: SPD14BL

SPD	14	BL
Type	Threads code	Colours code

* For standard items, codes and dimensions see tables at page 4.85.2.

Technical data		
Fluid	Compressed air	
Max pressure	12 bar	
Temperature range	-20 °C ÷ + 70°C	
Parallel threads	UNI - ISO 228 / 1 (BSP)	
Materials	Body: Acetal resin	
	Noise absorbing material:	SPD: Granulated acetal resin
		SPF: Pressed felt and aluminium net

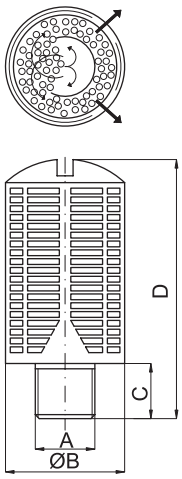

Dynamic (self-cleaning)

Blue		Black		Yellow		A	B	C	D
Code	Item	Code	Item	Code	Item				
016001	SPD18BL	016011	SPD18NE	010001	SPD18GI	1/8”	15	6	32,5
016002	SPD14BL	016012	SPD14NE	010002	SPD14GI	1/4”	19,5	8	43
016003	SPD38BL	016013	SPD38NE	010003	SPD38GI	3/8”	24,5	11	58
016004	SPD12BL	016014	SPD12NE	010004	SPD12GI	1/2”	24,5	11	58
016005	SPD34BL	016015	SPD34NE	010005	SPD34GI	3/4”	48	18	115
016006	SPD01BL	016016	SPD01NE	010006	SPD01GI	1”	48	18	115

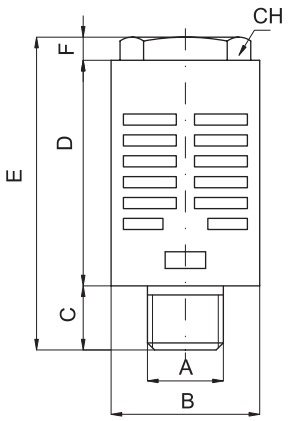

Static (with felt)

Blue		Black		White		A	B	C	CH	D	E	F
Code	Item	Code	Item	Code	Item							
017031	SPF18BL	010021	SPF18NE	017021	SPF18NT	1/8”	15,5	6	10	25,5	33	2,5
017032	SPF14BL	010022	SPF14NE	017022	SPF14NT	1/4”	19,5	8	12	32	43	3
017033	SPF38BL	010023	SPF38NE	017023	SPF38NT	3/8”	24,5	11	16	44	58	3
017034	SPF12BL	010024	SPF12NE	017024	SPF12NT	1/2”	24,5	11	16	44	58	3
017035	SPF34BL	010025	SPF34NE	017025	SPF34NT	3/4”	50	18	25	90	118	10
017036	SPF01BL	010026	SPF01NE	017026	SPF01NT	1”	50	18	25	90	118	10

Version	Symbol	Type
Conical silencer		AC
Conical silencer with nut		ACQ
Conical silencer with hexagonal nut		AE
Extended conical silencer with hexagonal nut		AEA
Conical silencer with hexagonal nut and nipple in copper plated steel		AEB
Cylindrical silencer		AF
Flat silencer		AEP
Silencer with stainless steel mesh		AFE
Internal silencer		AP
Basic cylindrical silencer		AT
Basic cylindrical silencer with screwdriver slot		ATT



Series of silencers with metal nipple and 36 micron sintered bronze filter element.
They can applied to valve exhausts to reduce noise level.

* How to order: ACQ14N

ACQ	14	N
Type	Thread code	Option code

* For standard items, codes and dimensions see table from page 4.85.12.

Options	Code
Completely nickel plated	N

Threads	M5	1/8”	1/4”	3/8”	1/2”	3/4”	1”
Code	M5	18	14	38	12	34	01

Technical data		
Fluid	Compressed air	
Pressure range	0 ÷ 12 bar	
Temperature range	-10 °C ÷ + 80°C	
Parallel threads	UNI - ISO 228 / 1 (BSP)	
Metric threads	ISO R / 262	
Materials	Filter element:	Sintered spherical bronze (AFE - AFEX with sintered stainless steel AISI 304 net)
	Nipple:	Brass (AEB in copper plated steel; AFEX in stainless steel 304)
	Filter degree:	36 micron

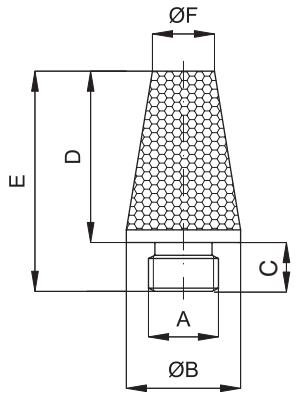

Conical silencer

Code	Item	A	B	F	C	D	E
010031	AC18	1/8”	12	8	6	15	21
010032	AC14	1/4”	15	11	6	19	25
010033	AC38	3/8”	20	15	8	28	36
010034	AC12	1/2”	25	18	10	33	43
010035	AC34	3/4”	31	23	13	40	53
010036	AC01	1”	37	28	15	48	63
010037	ACM5	5MA	6	5	4,5	8,5	13

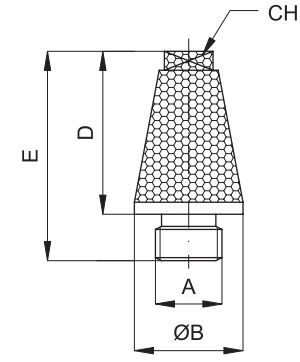

Conical silencer with nut

Code	Item	A	B	CH	C	D	E
010051	ACQ18	1/8”	12	7	6	15	21
010052	ACQ14	1/4”	15	9	6	19	25
010053	ACQ38	3/8”	20	13	8	28	37
010054	ACQ12	1/2”	25	16	10	33	41
010055	ACQ34	3/4”	31	20	13	40	51
010056	ACQ01	1”	37	23	15	48	60
010057	ACQM5	5MA	12	7	6	15	19

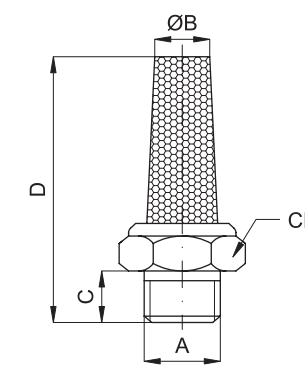

Conical silencer with hexagonal nut

Code	Item	A	B	CH	C	D
010121	AE18	1/8”	7	13	6	29
010122	AE14	1/4”	9	16	8	32
010123	AE38	3/8”	13	19	9	43
010124	AE12	1/2”	16	24	11	53
010125	AE34	3/4”	20	30	13	53
010126	AE01	1”	20	36	15	66
010127	AEM5	5MA	4,5	7	4	16
010128	AE18F	1/8”F	7	13	6	29

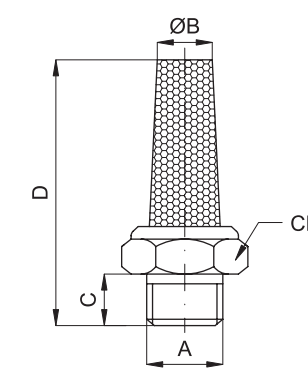

Extended conical silencer with hexagonal nut

Code	Item	A	B	CH	C	D
010161	AEA18	1/8”	7	13	6	43
010162	AEA14	1/4”	9	16	8	51
010163	AEA38	3/8”	10	19	9	56
010164	AEA12	1/2”	13	24	11	68
010165	AEA34	3/4”	17	30	13	70
010166	AEA01	1”	23	36	15	82
010167	AEAM5	5MA	4	8	3,5	25
010168	AEA18F	1/8”F	7	13	6	43

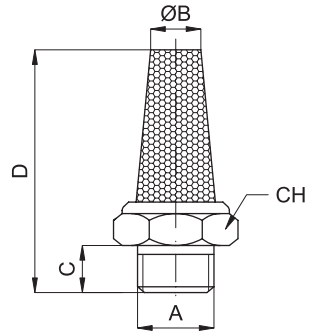

Conical silencer with hexagonal nut and nipple in copper plated steel

Code	Item	A	B	CH	C	D
010141	AEB18	1/8”	8	12	4,5	20
010142	AEB14	1/4”	11	15	6	26
010143	AEB38	3/8”	14	19	7	34
010144	AEB12	1/2”	16	23	8	40
010145	AEB34	3/4”	22	29	9	51
010146	AEB01	1”	26	36	11	66
010147	AEBM5	5MA	5	7	3,5	9

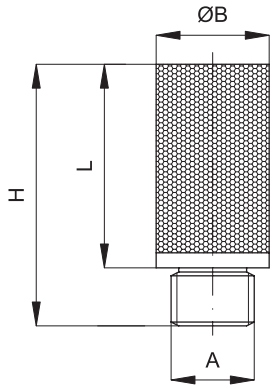

Cylindrical silencer

Code	Item	A	B	L	H
010111	AF18	1/8”	13	32	38
010112	AF14	1/4”	16	45	51
010113	AFM5	5MA	8	16	21

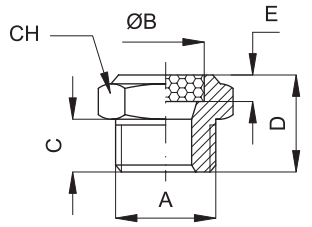

Flat silencer

Code	Item	A	B	CH	C	E	D
010091	AEP18	1/8”	11	13	6	4	13
010092	AEP14	1/4”	14	16	8	4	16
010093	AEP38	3/8”	17	19	9	4	18
010094	AEP12	1/2”	22	24	11	4	20
010095	AEP34	3/4”	28	30	13	4	24
010096	AEP01	1”	34	36	15	4	27
010097	AEPM5	5MA	6,5	8	3,5	3	8
010098	AEP18F	1/8”F	11	13	6	4	13

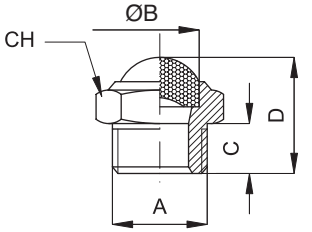

Silencer with stainless steel mesh

Code	Item	A	B	CH	C	D
010311	AFE18	1/8”	11	13	6	16
010312	AFE14	1/4”	14	16	8	19
010313	AFE38	3/8”	17	19	9	21
010314	AFE12	1/2”	22	24	10	23
010315	AFE34	3/4”	28	30	10	27
010316	AFE01	1”	34	36	15	29
010317	AFEM5	5MA	6,5	8	3,5	8
010318	AFE18F	1/8”F	12	14	6	20

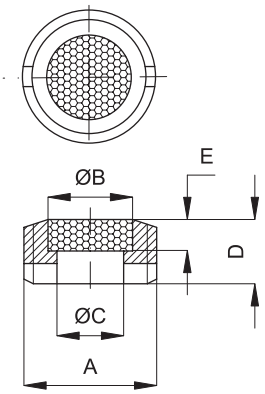

Internal silencer

Code	Item	A	B	C	E	D
010251	AP18	1/8”	6	5	3	4
010252	AP14	1/4”	8	6	3	4
010253	AP38	3/8”	10	8	3	5
010254	AP12	1/2”	15	12	4	8
010255	AP34	3/4”	20	17	4	10
010256	AP01	1”	26	23	4	10

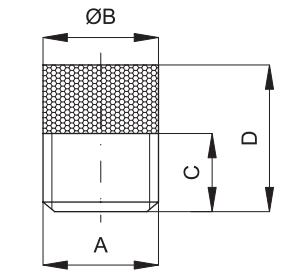

Basic cylindrical silencer

Code	Item	A	B	C	D
010211	AT18	1/8”	10	6	12
010212	AT14	1/4”	13	6	12
010213	AT38	3/8”	17	7	15
010214	AT12	1/2”	21	10	18
010215	AT34	3/4”	26	13	22
010216	AT01	1”	33	14	25

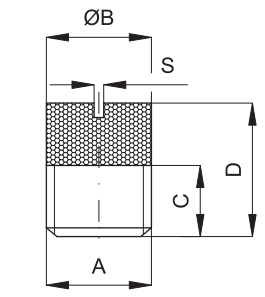

Basic cylindrical silencer with screwdriver slot

Code	Item	A	B	S	C	D
010231	ATT18	1/8”	10	1,5	6	12
010232	ATT14	1/4”	13	1,5	6	12
010233	ATT38	3/8”	17	1,5	7	15
010234	ATT12	1/2”	21	1,5	10	18
010235	ATT34	3/4”	26	1,5	13	22
010236	ATT01	1”	33	1,5	14	25

Silencers

Metal silencers for presses

Version	Symbol	Type
Metal silencers for presses		M

Options	Code
Till 40 bar	/40



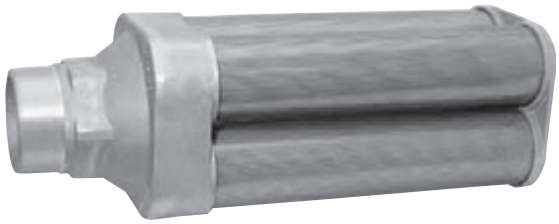

Series of metal silencers particularly suitable for exhausts in big plants and this thanks to their high flow and noise reduction. They are normally used for presses.

* How to order: M12/40

M	12	/ 40
Type	Thread code	Option

* For standard items, codes and dimensions see tables at page 4.85.22.

Threads	1/8”	1/4”	3/8”	1/2”	3/4”	1”	1 1/4”	1 1/2”	2”	3”	4”	6”
Code	01	02	00	05	07	10	12	15	20	30	40	60

Flows at 6 bar												
Threads	1/8”	1/4”	3/8”	1/2”	3/4”	1”	1 1/4”	1 1/2”	2”	3”	4”	6”
l/min	1.553	3.105	6.210	9.035	19.760	28.230	45.168	73.398	118.600	254.000	508.000	1.130.000

Spare cartridges can be supplied upon request.

Technical data		
Fluid	Compressed air	
Pressure range	0 ÷ 10 bar	
Temperature range	-25 °C ÷ + 100°C	
Taper threads	Universal BSP - NPTF	
Materials	Body:	Aluminium
	Tie rods:	Steel
	Cartridge:	Noise absorbing fibre coated by metal drilled plate

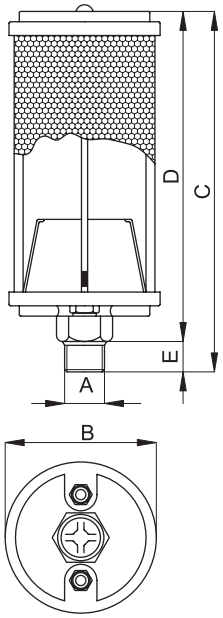

Single chamber (till 2")

Code	Item	A	B	C	D	E
011001	M01	1/8"	49	80	70	10
011002	M02	1/4"	49	106	93	13
011003	M00	3/8"	70	126	113	13
011004	M05	1/2"	86	146	132	13
011005	M07	3/4"	89	179	162	17
011006	M10	1"	103	212	192	20
011007	M12	1 1/4"	103	219	192	26
011008	M15	1 1/2"	136	351	318	33
011009	M20	2"	136	484	450	33

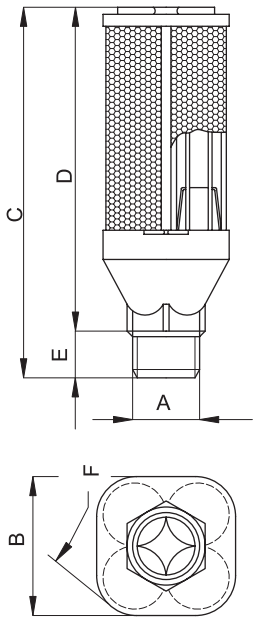

Four chambers (from 3" to 6")

Code	Item	A	B	C	D	E	F
011501	M30	3"	179	623	421	56	219
011502	M40	4"	205	623	563	60	248
011503	M60	6"	288	815	732	83	348

Exhausts conveyor

Version	Symbol	Code	Item
Exhausts conveyor		080001	CSC1



The exhausts conveyor is a useful and practical tool to be used where more exhausts (of one or more machines) have to be conveyed to one silencing element only; the exhaust conveyor, compared with the traditional silencer, keeps the work place clean as it doesn't exhaust the oil nebulized by the plant into the air.
The various tubes from different machines are connected with the exhaust conveyor upper side by pre-mounted push-in fittings (female 1" thread can also be used).
The air mixed with oil flows into the respective chamber linked with a connection (for this reason it is not necessary to close the positions not used) and into a thick aluminium wire filter that separates air from oil, keeping the latter back. The air passes through the filter and then flows outside through a second sintered bronze filter covering the whole conveyor circumference, while the oil drops to a vessel below, which can be emptied by a manual exhaust placed at the bottom of the conveyor.

Technical data		
Fluid	Compressed air	
Pressure range	0 ÷ 12 bar	
Temperature range	-20 °C ÷ + 70°C	
Connections	10 connections with integral 8 mm push-in fittings, 1 port with female BSP 1" thread	
Connection tubes	Calibrated nylon, polyurethane and rilsan	
Tube tolerances	± 0,05 mm	
Materials	Body:	Acetal resin
	Separator filter:	Aluminium
	External filter:	Sintered bronze
	Connections:	Brass
	Bracket:	White zinc plated steel

type: **CSC1**

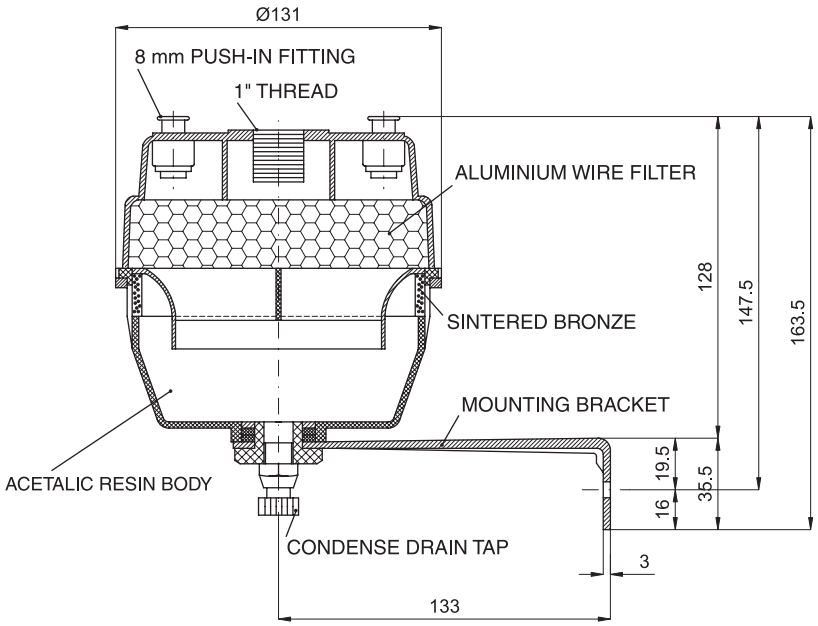
Ø131
8 mm PUSH-IN FITTING
1" THREAD
ALUMINIUM WIRE FILTER
SINTERED BRONZE
MOUNTING BRACKET
ACETALIC RESIN BODY
CONDENSE DRAIN TAP
128
147.5
163.5
19.5
16
35.5
3
133

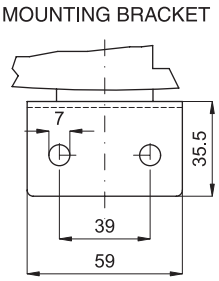
MOUNTING BRACKET
7
35.5
39
59

4

Notes

Stainless steel cylinders ISO 6432



from page 5.1.1

Stainless steel cylinders ISO 6431



from page 5.5.1

Stainless steel piston rod accessories



from page 5.20.1

Stainless steel mounting accessories for cylinders ISO 6432



from page 5.30.1

Stainless steel mounting accessories for cylinders ISO 6431



from page 5.40.1

Stainless steel ball valves



from page 5.100.1

Stainless steel uni-directional valves



from page 5.105.1

Stainless steel quick exhaust valves



from page 5.110.1

Stainless steel push-in fittings series RX



from page 5.150.1

Stainless steel rapid fittings series CX



from page 5.155.1

Stainless steel compression fittings series OX



from page 5.160.1

Stainless steel standard fittings series AX



from page 5.165.1

Stainless steel quick-lock cuplings



from page 5.170.1

Stainless steel swivel joints



from page 5.175.1

Stainless steel air-reservoirs



from page 5.180.1

Stainless steel flow controls

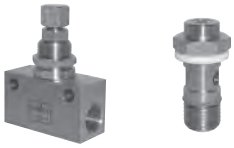

from page 5.185.1

Stainless steel silencers and silenced exhaust restrictors



from page 5.190.1

Notes

Stainless Steel cylinders ISO 6432

Bores from 16 to 25 mm *Double acting*

Standard executions		
Version	Symbol	Type
Magnetic	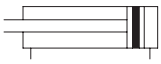	MDMX
Magnetic with adjustable cushionings (from bore 20 to 25 mm)	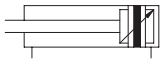	MDMAX





On request, they can be supplied according Directive 94/9/EC - **ATEX**
CE Ex **II 2 GDc T5**

Series of stainless steel cylinders conforming to ISO 6432 standards.
The heads are connected with the tube through rolling; this guarantees perfect fit.
The cushionings are in nitrile rubber to relieve the impact of the piston.
One or more magnetic reed switches can be applied to the magnetic type.
For the magnetic reed switches type ASV see from page 1.110.1.
For mounting accessories see from page 5.30.1.
For rod clevis see from page 5.20.1.

Options		Suffix
Through rod		P
Seals FKM	max 150°	V
Special versions on request		/ S

The options can be combined (when this is possible).

How to order: 20/50 MDMXP

20	/	50	MDMX	P
Bore	/	Stroke	Type	Option

Technical data		
Fluid	Compressed filtered air with or without lubrication. Lubrication, if be used, must be continous.	
Pressure	max 10 bar	
Temperature range	-20 °C ÷ + 80°C	
Materials	Heads:	Stainless steel AISI 316
	Barrel:	Stainless steel AISI 304
	Rod:	Stainless steel AISI 316
	Seal:	Polyurethane - Bronze bushing: Sintered bronze - Piston: brass

Bore (mm)	Standard strokes (mm)	Maximum stroke (mm)
16	10, 25, 50, 80 100, 125, 160 200, 250, 320, 400, 500	1000
20		
25		

See page 1.1.3 to calculate the cylinder force.
Seal kits not available for these cylinders.

Type: **MDMX-MDMAX**

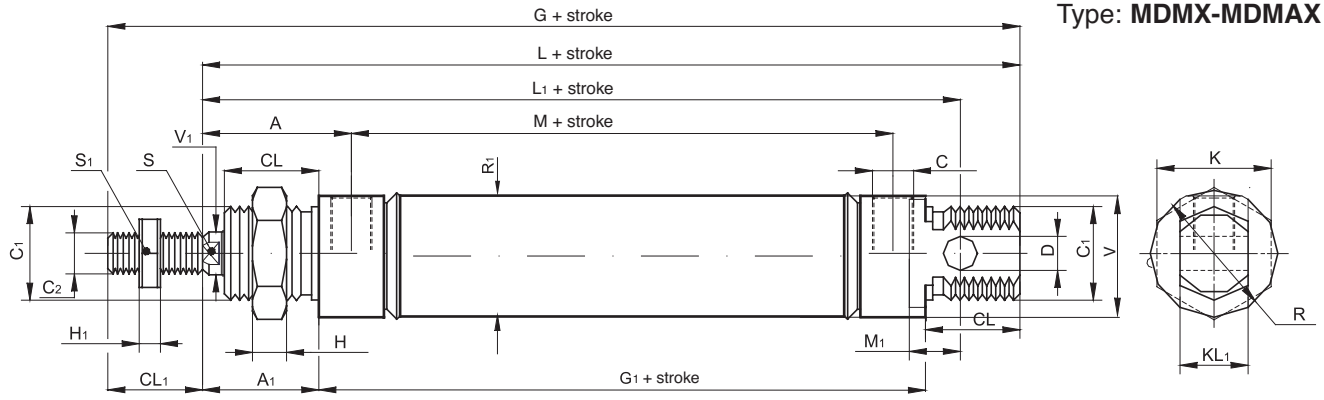

ø mm	C2	V1	C1	R	KL1	R1	V	D	CL1	L1	L	M	G1	A1	CL	A	M1	S	C	G	K	H	H1	S1
16	M6	6	M16x1,5	20	12	17,27	19	6	16	82	96	46	56	22	18	27	9	5	M5	112	24	8	3	10
20	M8	8	M22x1,5	27	16	21,27	25,5	8	20	95	111	51	67	24	20	32	12	7	1/8”	131	27	8	4	13
25	M10x1,25	10	M22x1,5	30	16	26,5	28	8	22	104	118	52	67	29	22	37	12	9	1/8”	140	27	8	6	17

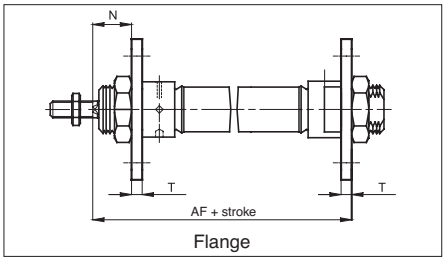

Flange

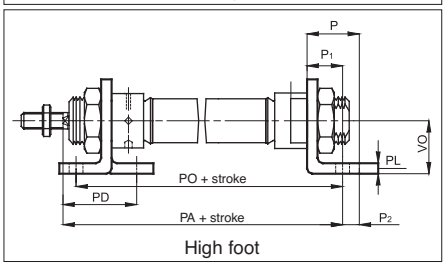

High foot

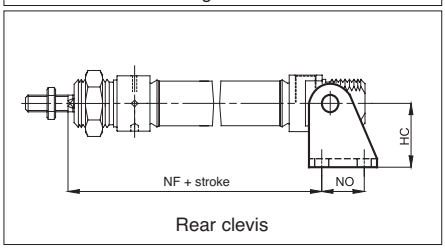

Rear clevis

Type: **MDMXP-MDMAXP**

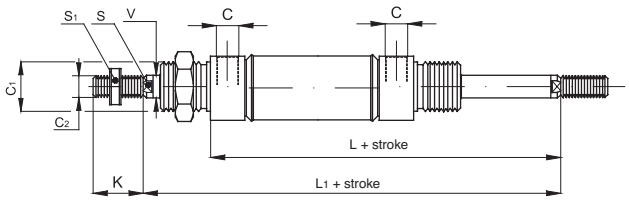

ø mm	L	L1	C	C1	C2	S	S1	V	K
16	74,5	96,5	M5	M16x1,5	M6	5	10	6	16
20	92	116	1/8”	M22x1,5	M8	7	13	8	20
25	97	125	1/8”	M22x1,5	M10x1,25	9	17	10	22

ø mm	AF	HC	P	P1	P2	PA	PD	PL	PO	T	VO	N
16	82	27	20	14	6	92	32	4	84	4	20	18
20	97	30	25	17	8	109	36	5	102	5	25	19
25	102,5	30	25	17	8	114,5	40	5	103,5	5	25	23

For dimensions and codes of the accessories see page 5.30.1

Standard executions		
Version	Symbol	TYPE
MAGNETIC STANDARD	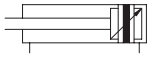	AMX

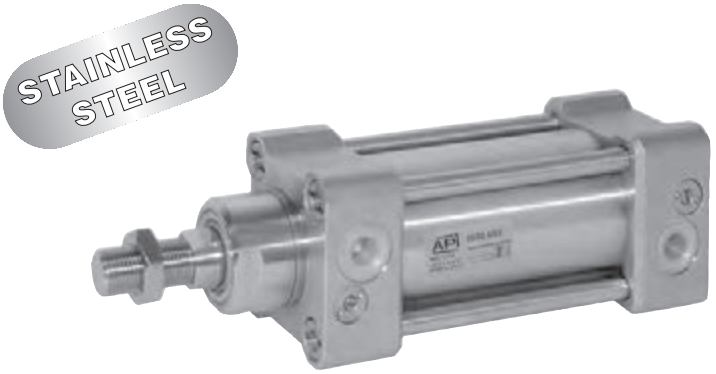

New series of stainless steel 316 L cylinders conforming to DIN 6431 and VDMA 24 562.
Round tube and external tie-rods, standard with adjustable cushionings.
Scraper ring in polyurethane specially developed for chemical and food industries.
The main features of this cylinder are the “clean” modern design and the attention to details.
A particular attention has been given to the manufacture of the end caps; there are no external casting cavities, thus eliminating contamination traps.
In order to facilitate the replacement of the piston rod seal the nose has been developed for simple maintenances also on cylinders still mounted on a machine.

For the magnetic reed switches type ASV see from page 1.110.1.
For coupling cylinders/reed swiches/brackets see table on page 1.120.5
For mounting accessories see from page 5.40.1
For rod accessories see from page 5.20.1.

On request, they can be supplied according Directive 94/9/EC - **ATEX**
II 2 GDc T5

Options	Sigla
Through rod (page 5.5.4)	P
Seals FKM max 150°C (scraper ring only = V1)	V
Tandem forward movement piston rods coupled together (page 5.5.5)	TA1
Tandem forward movement piston rods independent (page 5.5.5)	TA2
Tandem back to back (page 5.5.5)	TA3
Tandem front to front (page 5.5.5)	TA4
Extended rod (indicate the requested WH dimension in mm. E.g.: WH -100).	WH-...
Without adjustable cushionings	D
Adjustable rear cushioning only	D1
Adjustable front cushioning only	D2
Special male thread (indicate the requested thread. E.g. : R-M 10x1,5). The dimension AM of the special thread will be the same as the standard. The cylinder will be supplied without rod nut.	R-M...
Female thread; for dimensions see page 5.5.4	F
With bellows for protection of the rod (in this case the dimension WH will be extended according the stroke of the cylinder)	Z
Special on request	/S

The options can be combined (when this is possible).
The suffix of the options are to be added to the model number of the standard product, as shown in the following table.
How to order: 63 / 100 AMXPVR-M12x1,25

63	/	100	AMX	P	V	R-M12X1,25
Bore	/	Stroke	Type	Option	Option	Option

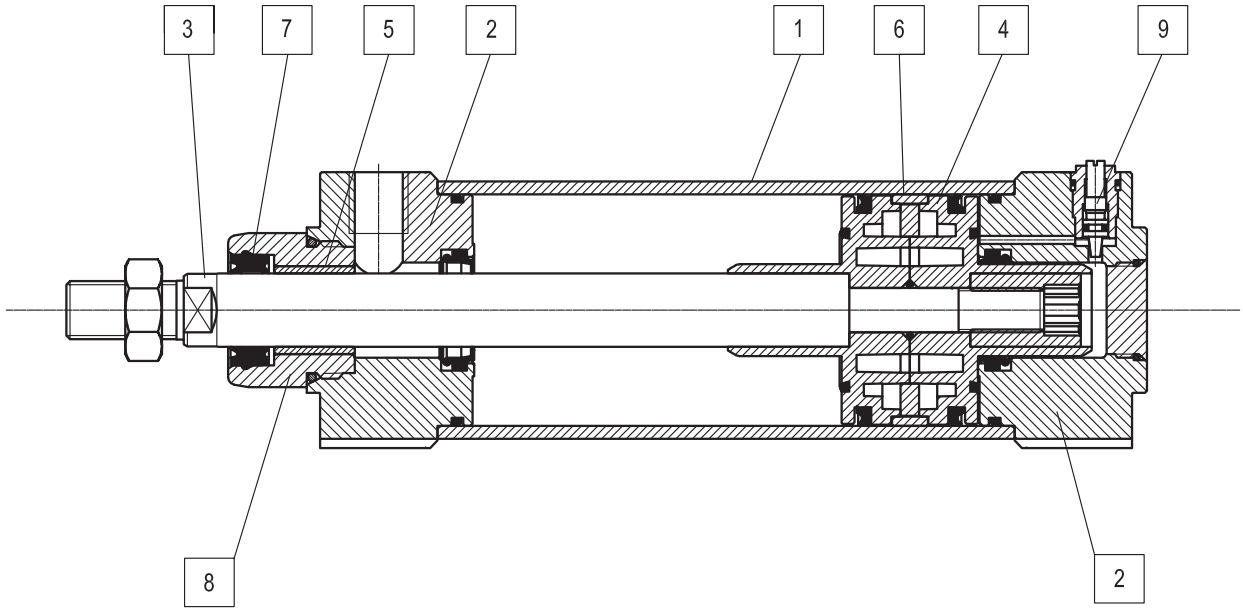

Materials (standard types)	
1 Tube and tie-rods	Stainless steel AISI 316L
2 Heads	Stainless steel AISI 316L
3 Rod	Stainless steel AISI 316L, lapped
4 Piston	Die-cast aluminium
5 Bushing	Self-lubricating sintered bronze
6 Guide ring	Natural Delrin
7 Rod seals	Special polyurethane
8 Disassembling nose	Stainless steel AISI 316L
9 Group cushioning screw	Stainless steel AISI 316L
Other seals	Nitrile rubber NBR/polyurethane

Technical data										
Bore (mm)		32	40	50	63	80	100	125	160	200
Fluid		Compressed filtered air with or without lubrication. Lubrication, if be used, must be continous.								
Pressure range		0,5 ÷ 10 bar								
Temperature range		-20 °C ÷ +80 °C								
Stroke		from 10 mm to 2500 mm								
Cushion lenght		20	22	25	25	35	35	35	48	48
Ports		1/8”	1/4”		3/8”		1/2”		3/4”	
Rod thread		M10 x 1,25	M12 x 1,25	M16 x 1,5		M20 x 1,5		M27 x 2	M36 x 2	
Weight	Stroke zero (g)									
	Additional 10 mm stroke (g)									

type: **AMX**

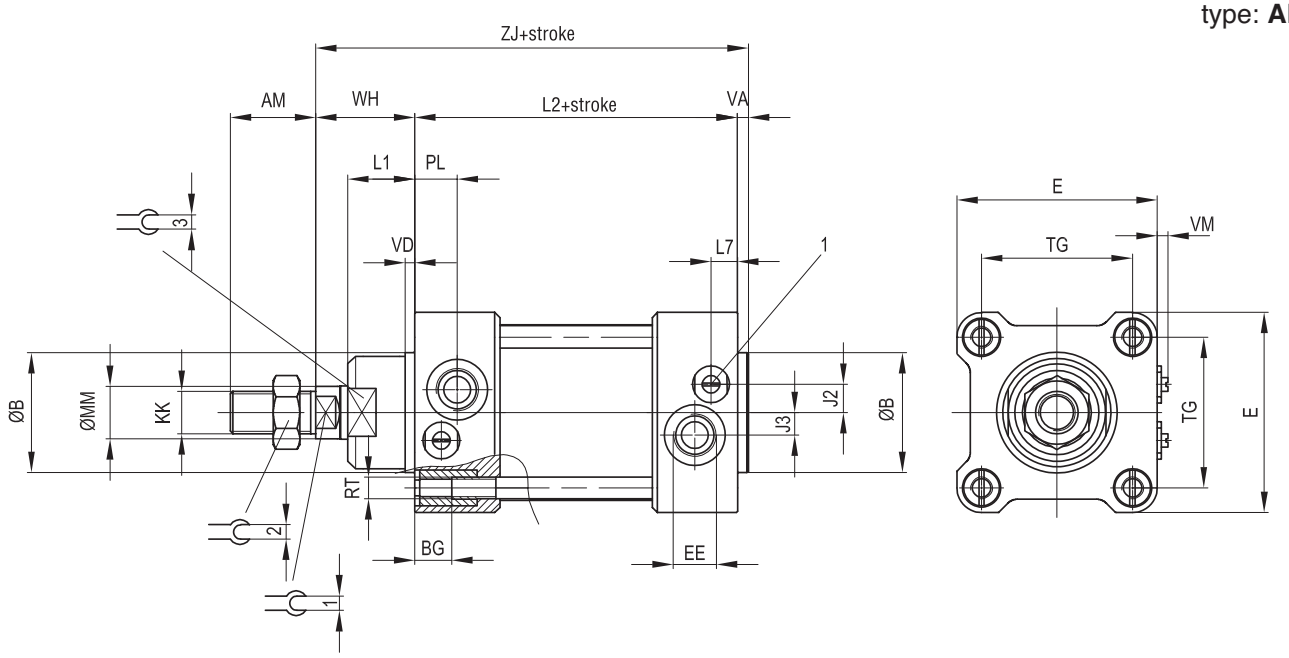

Ø (mm)	AM	B Ø d11	BG	E	EE	J2	J3	KK	L1	L2
32	22	30	11	47	G1/8	6,5	5,5	M10x1,25	20	94
40	24	35	11	52	G1/4	8	6	M12x1,25	22	105
50	32	40	13	65	G1/4	9,5	7,5	M16x1,5	26	106
63	32	45	13	75	G3/8	11,5	8,5	M16x1,5	25	121
80	40	45	15	95	G3/8	10,5	9,5	M20x1,5	32	128
100	40	55	15	115	G1/2	15	10	M20x1,5	38	138
125	54	60	17	140	G1/2	15	10	M27x2	40	160
160	72	65	20	180	G3/4	15	15	M36x2	50	180
200	72	75	20	220	G3/4	15	15	M36x2	65	180

Ø (mm)	L7	MM Ø f7	PL	RT	TG	VA	VD	WH	ZJ	1	2	3
32	18	12	14	M6	32,5	4	4	26	124	10	17	27
40	20	16	15	M6	38	4	4	30	139	13	19	32
50	20	20	15	M8	46,5	4	4	37	147	17	24	36
63	10	20	16	M8	56,5	4	4	37	162	17	24	38
80	13,5	25	20,5	M10	72	4	4	46	178	22	30	42
100	13	25	20	M10	89	4	4	51	193	22	30	50
125	33	32	27	M12	110	5	5	65	230	27	41	52
160	32	40	25	M16	140	8	8	80	268	36	55	60
200	34	40	25	M16	175	8	8	95	283	36	55	70

type: **...P**

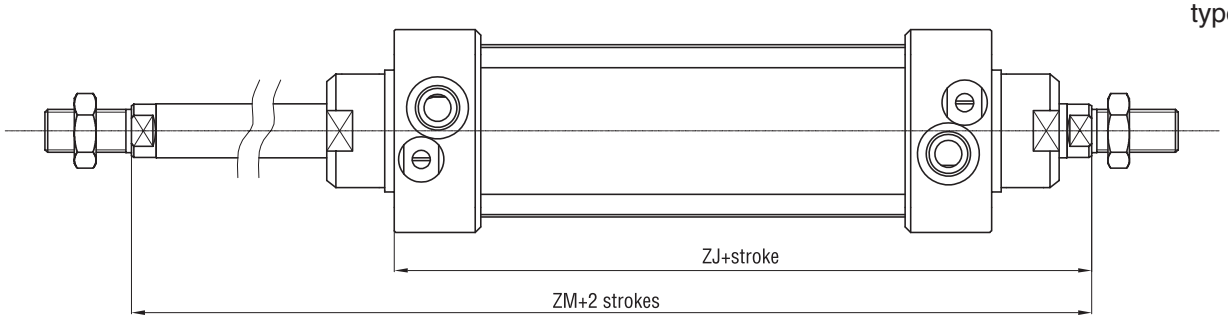

type: **...F**

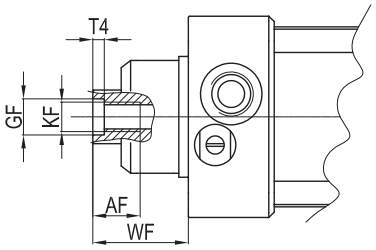

Ø mm	AF	KF	T4	WF	GF	ZJ	ZM
32	12	M6	2,6	26	8	120	146
40	12	M8	3,3	30	10	135	165
50	16	M10	4,7	37	12	143	180
63	16	M10	4,7	37	12	158	195
80	20	M12	6,1	46	14	174	220
100	20	M12	6,1	51	14	189	240
125	32	M16	8	65	18	225	290
160	36	M20	10	80	22	260	340
200	36	M20	10	95	22	275	370

type: **...TA1**

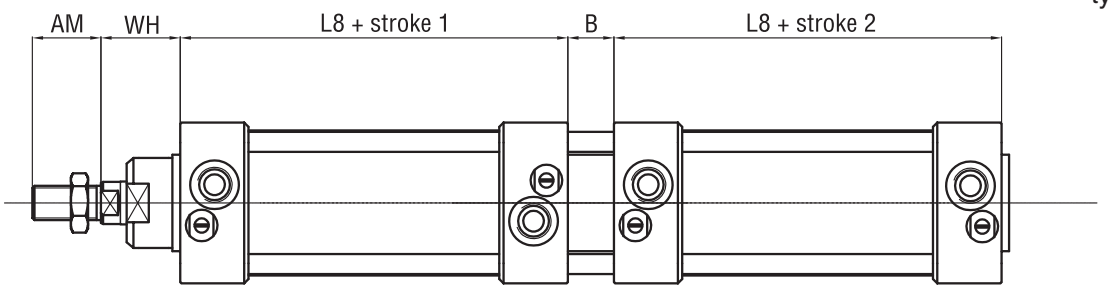

type: **...TA2**

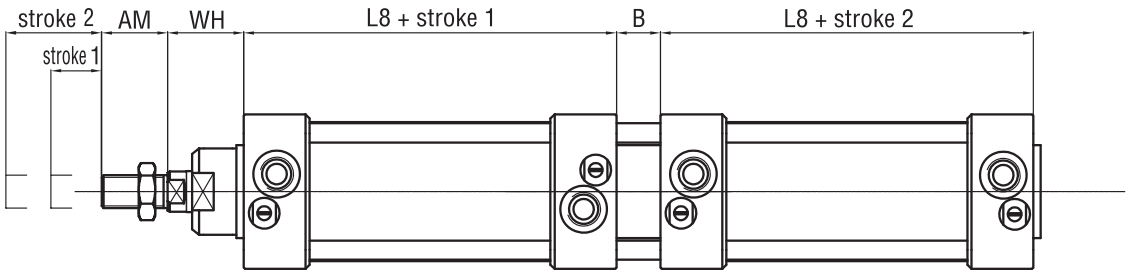

type: **...TA3**

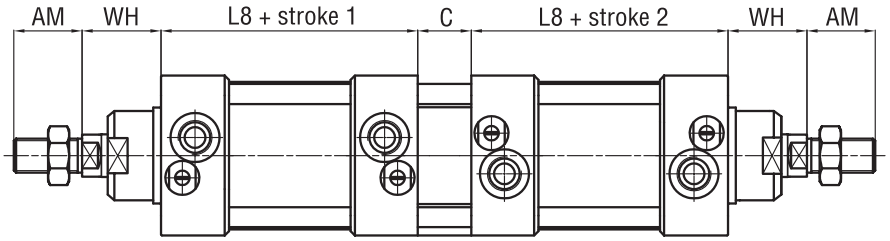

type: **...TA4**

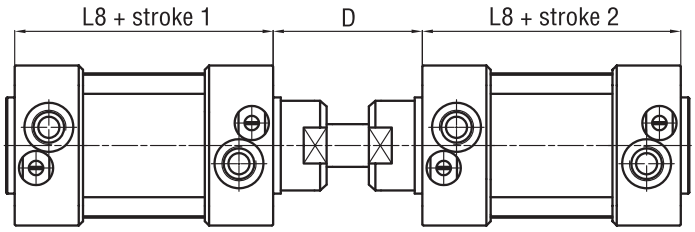

Ø mm	AM	B	C	D	L8	WH
32	22	40	12	48	94	26
40	24	44	12	54	105	30
50	32	52	16	69	106	37
63	32	50	16	69	121	37
80	40	64	20	86	128	46
100	40	76	20	91	138	51
125	54	80	35	120	160	65
160	72	100	50	152	180	80
200	72	130	50	167	180	95

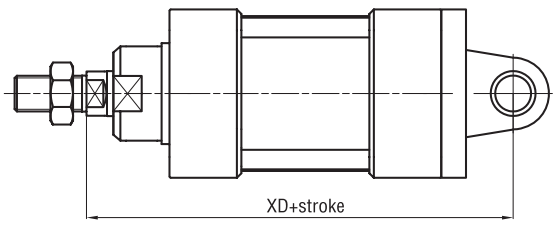

Rear clevis/eye

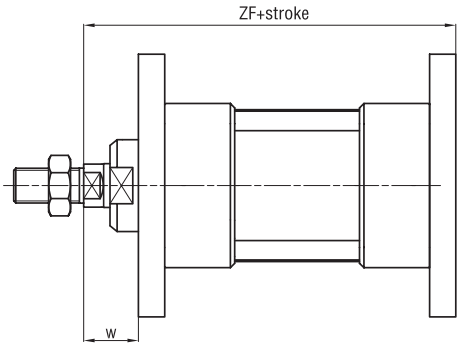

Flange

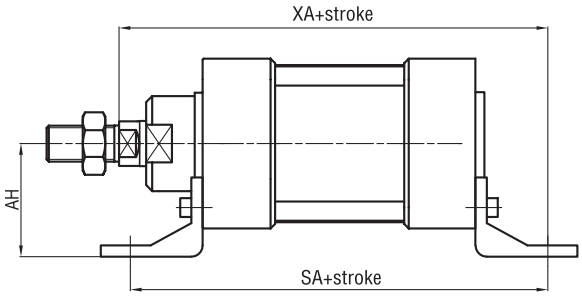

Feet

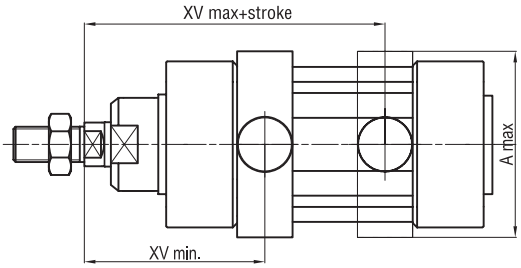

Centre trunnion

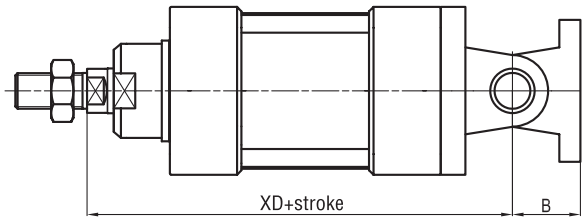

Rear standard hinge

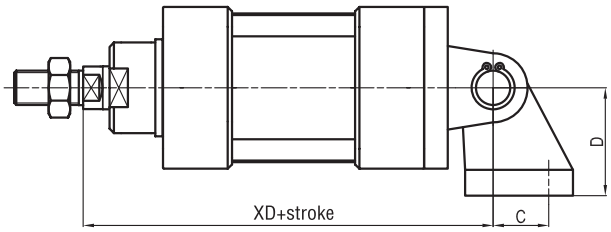

Rear 90° hinge

For dimensions and codes of the accessories: see page 5.40.1

Ø mm	A max	AH	B	C	D	SA	W	XA	XD	XV min	XV max	ZF
32	70	32	22	21	32	142	16	144	142	60	86	130
40	78	36	25	24	36	161	20	163	160	69	96	145
50	91	45	27	33	45	170	25	175	170	78	102	155
63	94	50	32	37	50	185	25	190	190	82	113	170
80	130	63	36	47	63	210	30	215	210	97	123	190
100	145	71	41	55	71	220	35	230	230	107	133	205
125	170	90	50	70	90	250	45	270	275	126,5	163,5	245
160	190	115	55	/	/	270	55	305	315	150	190	285
200	240	135	60	/	/	275	70	322,5	335	165	205	300

Mounting Accessories for Stainless Steel Cylinders

Clevis ISO 8140

Standard executions		
Version	Symbol	Type
Female clevis		FFXISO





ON REQUEST, AVAILABLE IN STAINLESS STEEL AISI 316

Clevis conforming to ISO 8140 standards.
They are complete with clips in the standard version (the models M27X2 and M36X2 are normally provided with a pin and 2 seegers).
The clevis is mounted on the cylinder rod and allows a swinging movement.

Options	Sigla
Special versions on request	/ S

Technical data		
Materials	Body and clip:	Stainless steel AISI 303
	Seeger:	Stainless steel AISI 420

type: **FFXISO**

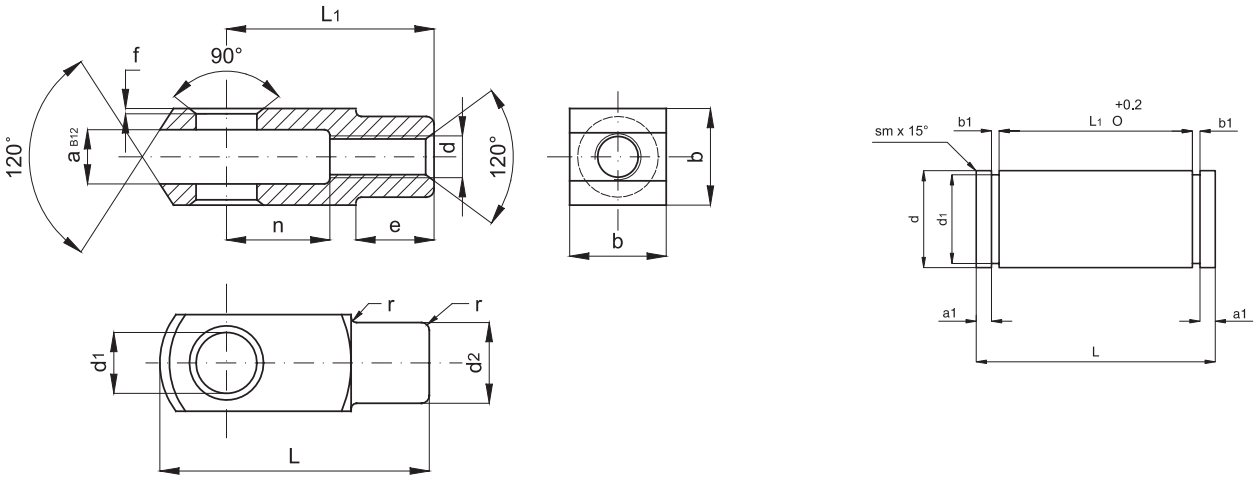

For the accessories of bore 125-160-200 mm, apply for availability because they have to be produced on request only.

Code	Item	For cylinder ø mm	d	a	a_1	b_1	b	d_1	d_3	L_2	d_2	e	f	L	L_1	n	r	Weight (g)
041052	4FFXISO	8-10	M4x0,7	4	1	1,1	8	4	-	11	8	6	0,5	21	16	8	0,5	7
041053	6FFXISO	12-16	M6x1	6	1	1,1	12	6	-	16	10	9	0,5	31	24	12	0,5	19
041054	8FFXISO	20	M8x1,25	8	1	1,1	16	8	-	22	14	12	0,5	42	32	16	0,5	47
041055	10FFXISO	25-32	M10x1,25	10	1,5	1,1	20	10	9,6	25	18	15	0,5	52	40	20	0,5	89
041056	12FFXISO	40	M12x1,25	12	2	1,1	24	12	11,5	30	20	18	0,5	62	48	24	0,5	153
041057	16FFXISO	50-63	M16x1,5	16	2,4	1,1	32	16	15,2	39	26	24	1	83	64	32	1	320
041058	20FFXISO	80-100	M20x1,5	20	2,9	1,3	40	20	19	48	34	30	1	105	80	40	1	680
041112	27FFXISO	125	M27x2	30	-	-	55	30	-	-	48	38	1	148	110	54	1	-
041113	36FFXISO	160-220	M36x2	35	-	-	70	35	-	-	60	40	1	188	144	72	1	-

Standard executions		
Version	Symbol	Type
With female thread		RFX..SE



Self-lubricating bearing heads servicing-free and conforming to DIN 648-K and ISO 8139 standards.
The bearing head is mounted on the cylinder rod.

Technical data	
Temperature range	-30 °C ÷ +150 °C
Materials	Body: Stainlesssteel Sphere: Stainless steel External ring:

type: **RFX..SE**

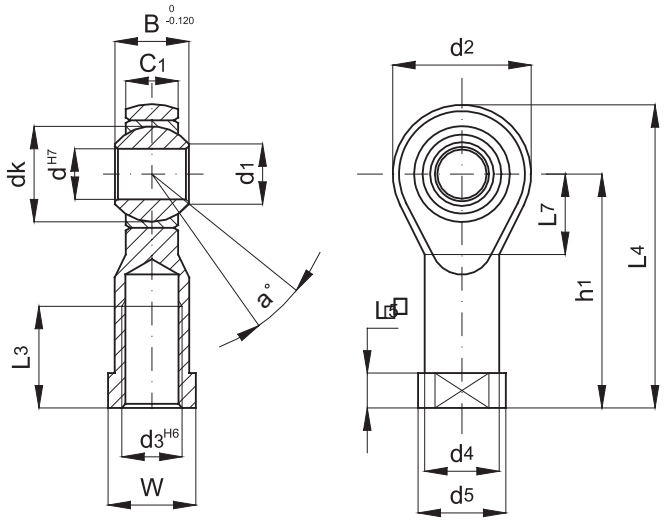

Code	Item	For cylin. ISO ø mm	d	d3	B	C1	d1	d2	d4	d5	dk	h1	L3	L4	L5	L7	W	Static load (daN)	a°	Weig. (g)
041576	RFX4SE	8-10	5	M4	8	6	7,7	18	9	11	11,112	27	10	36	4	10	9	600	13	
041570	RFX6SE	12-16	6	M6	9	6,75	8,9	20	10	13	12,700	30	12	40	5	11	11	700	13	
041577	RFX8SE	20	8	M8	12	9	10,4	24	12,50	16	15,875	36	16	48	5	13	14	1200	14	
040009	RFX10SE	25-32	10	M10x1,25	14	10,50	12,9	28	15	19	19,050	43	20	57	6,5	15	17	1400	13	
041578	RFX12SE	40	12	M12x1,25	16	12	15,4	32	17,50	22	22,225	50	22	66	6,5	17	19	1900	13	
040011	RFX16SE	50-63	16	M16x1,5	21	15	19,3	42	22	27	28,575	64	28	85	8	23	22	4800	15	
041579	RFX20SE	80-100	20	M20x1,5	25	18	24,3	50	27,50	34	34,925	77	33	102	10	27	30	5200	14	
041580	RFX30SE	125	30	M27x2	37	25	34,8	70	40	50	50,800	110	51	145	15	36	41	10800	17	
041581	RFX35SE	160-200	35	M36x2	43	28	37,7	80	46	58	57,150	125	56	165	17	41	50	12400	19	

Standard executions		
Version	Symbol	Type
Rear clevis with pin		CFX
Foot		PX
Flange		FX





Technical data	
Material	Stainless steel AISI 304

type: **CFX**

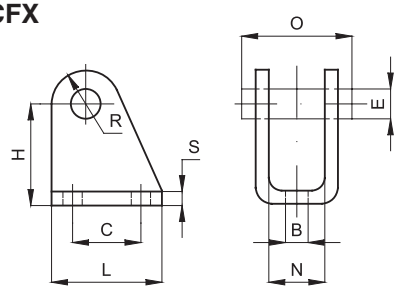

Rear clevis

Code	Item	For cyl. ø mm	B	E	C	H	L	N	O	R	S	Weight (g)
040046	CFX12-16	16	5,5	6	15	27	25	12,1	24	7	3	36
040047	CFX20-25	20-25	6,5	8	20	30	32	16,1	31	10	4	78

Complete with a pin and 2 seegers in the standard version.

type: **PX**

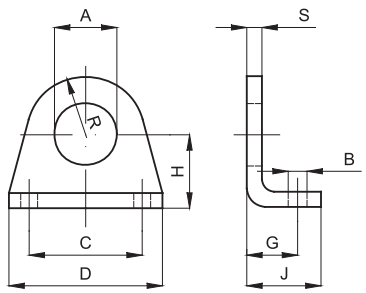

Foot

Code	Item	For cyl. ø mm	A	B	C	D	G	H	J	R	S	Weight (g)
040026	PX12-16	16	16,1	5,5	32	42	14	20	20	13	4	40
040027	PX20-25	20-25	22,1	6,6	40	54	17	25	25	20	5	90

type: **FX**

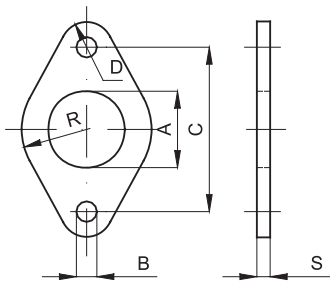

Flange

Code	Item	For cyl. ø mm	A	B	C	R	D	S	Weight (g)
040006	FX12-16	16	16	5,5	40	15	6	4	26
040007	FX20-25	20-25	22	6,6	50	20	8	5	50

Mounting Accessories for Stainless Steel Cylinders

Mounting screws

Standard executions		
Version	Standard	Type
Hexagon head cap screw for mounting VDMA 24 562	DIN912	VBVIX
Hexagon lowered head cap screw	DIN6912	VBTRX





How to order: VBVIX 032 / 040

VBVIX	032 / 040
Type	For cylinders bore 32 and 40 mm

Material: Stainless steel AISI 316

Screws			For cylinder mountings			
Code	**Item**	**Type**	**ISO 6431**	**VDMA 24 562**	**CNOMO**	**UNITOP**
040787	VBVIX 032/040	M6x18		•		
040788	VBVIX 050/063	M8x20		•		
040789	VBVIX 080/100	M10x20		•		
040790	VBVIX 125	M12x25		•		
040791	VBVIX 160/200	M16X30		•		
040792	VBTRX 032/040	M6x18		•		
040793	VBTRX 050/063	M8x20		•		
040794	VBTRX 080/100	M10x20		•		
040795	VBTRX 125	M12x25		•		
040796	VBTRX 160/200	M16x30		•		

Note for the use of the screws:
VBVIX Short hexagon head cap screw for mountings VDMA 24 562 (with spot facings)
VBTRX Short hexagon lowered head cap screw for mountings VDMA 24 562 (with spot facings)

Standard executions		
Version	Sym.	Type
Rear clevis		CFX..AQIS
Rear eye		CMX..AQIS
Rear 90° hinge CETOP RP 107P		ASVX..AQIS
Pin with rear clevis MP2 with seeger		SECX..AQIS
Narrow rear clevis		CFSX..AQIS
Narrow rear eye with bearing DIN 648K		CMSX..AQIS
Rear 90° hinge with bearing DIN 648K		ASSX..AQIS
Anti-rotating pin for narrow rear clevis		SECX..ARAQIS
Flange VDMA		FLVX..AQIS
Low foot		PBX..AQIS
Round adjustable centre trunnion (tie rod)		CTX..AQIS

STAINLESS STEEL

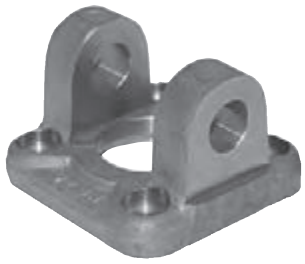

Technical data	
Material	Stainless steel AISI 316

Note: The mounting screws are to be ordered separately. (see page 5.35.1).
For the accessories of bore 125-160-200 mm, apply for availability because they have to be produced on request only.

type: **CFX**

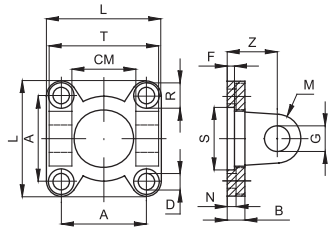

Rear clevis MP2

Code	Item	For cyl. ø mm	A	L	D	R	N	B	S	F	Z	G	M	CM	T	Weight (g)
040012	CFX32AQIS	32	32,5	45	6,6	11	5,5	10	30	5	22	10	10	26	45	
040830	CFX40AQIS	40	38	55	6,6	11	5,5	10	35	5	25	12	12	28	52	
040801	CFX50AQIS	50	46,5	65	9	15	6,5	10	40	5	27	12	12	32	60	
040014	CFX63AQIS	63	56,5	75	9	15	6,5	12	45	5	32	16	16	40	70	
040013	CFX80AQIS	80	72	95	11	18	10	14	45	-	36	16	16	50	90	
040838	CFX100AQIS	100	89	115	11	18	10	16	55	-	41	20	20	60	110	
040005	CFX125AQIS	125	110	140	13,5	20	10	20	60	-	50	25	25	70	130	
040797	CFX160AQIS	160	140	180	18	26	10	20	65	7	55	30	25	90	170	
040798	CFX200AQIS	200	175	220	18	26	11	20	75	7	60	30	25	90	170	

The pin is to be ordered separately: for the pin see page 5.40.2 (SECX..AQIS)

type: **CMX**

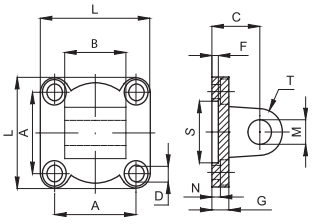

Rear eye MP4

Code	Item	For cyl. ø mm	A	L	D	R	N	G	S	F	C	M	T	B		Weight (g)
040805	CMX32AQIS	32	32,5	45	6,6	11	5,5	10	30	5	22	10	10	26		
040806	CMX40AQIS	40	38	55	6,6	11	5,5	10	35	5	25	12	12	28		
040802	CMX50AQIS	50	46,5	65	9	15	6,5	10	40	5	27	12	12	32	-0,2	
040808	CMX63AQIS	63	56,5	75	9	15	6,5	12	45	5	32	16	16	40	-0,6	
040016	CMX80AQIS	80	72	95	11	18	10	14	45	5	36	16	16	50		
040799	CMX100AQIS	100	89	115	11	18	10	16	55	5	41	20	20	60		
040008	CMX125AQIS	125	110	140	13,5	20	10	20	60	7	50	25	25	70	-0,5	
040800	CMX160AQIS	160	140	180	18	26	10	20	65	7	55	30	25	90	-1,2	
040804	CMX200AQIS	200	175	220	18	26	11	20	75	7	60	30	25	90		

type: **ASVX**

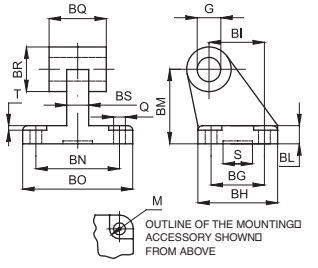

Rear 90° hinge CETOP RP 107P

Code	Item	For cyl. ø mm	Q	M	BG	BH	BI	BL	BM	BN	BO	BS	BR	BQ	G	T	S	Weight (g)
040809	ASVX32AQIS	32	6,6	11	18	31	21	8	32	38	51	10	20	26	10	1,6	20	
040810	ASVX40AQIS	40	6,6	11	22	35	24	10	36	41	54	10	22	28	12	1,6	20	
040812	ASVX50AQS	50	9	15	30	45	33	12	45	50	65	14	26	32	12	1,6	20	
040813	ASVX63AQIS	63	9	15	35	50	37	12	50	52	67	14	30	40	16	1,6	20	
040814	ASVX80AQIS	80	11	18	40	60	47	14	63	66	86	18	30	50	16	2,5	20	
040815	ASVX100AQIS	100	11	18	50	70	55	15	71	76	96	20	36	60	20	2,5	20	
040816	ASVX125AQIS	125	14	20	60	90	70	20	90	94	124	30	45	70	25	3,2	-	

Mounting Accessories for Stainless Steel Cylinders

Mountings for DIN ISO 6431 and VDMA 24 562

type: **SECX**

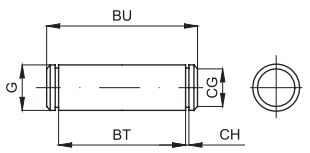

Pin for rear clevis MP2

Code	Item	For cyl. ø mm	G	BT	CG	CH	BU	Weight (g)
040829	SECX32AQIS	32	10	46	9,6	1,1	53	
040831	SECX40AQIS	40	12	53	11,5	1,1	60	
040811	SECX50AQIS	50	12	61	11,5	1,1	68	
040832	SECX63AQIS	63	16	71	15,2	1,1	78	
040015	SECX80AQIS	80	16	91	15,2	1,1	98	
040839	SECX100AQIS	100	20	111	19	1,3	118	
040818	SECX125AQIS	125	25	132	23,9	1,3	139	
040819	SECX160AQIS	160	30	171,5	28,6	1,6	178	
040820	SECX200AQIS	200	30	171,5	28,6	1,6	178	

It is supplied with 2 seegers included.

type: **CFSX**

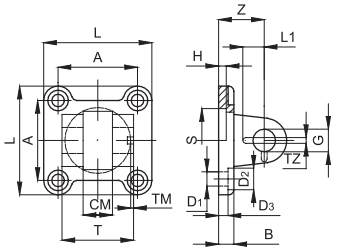

Narrow rear clevis for rear male trunnion with bearing DIN 648 K

Code	Item	For cyl. ø mm	L	T	CM	A	Z	H	B	DS	S	G	D_1	D_2	TA	TZ	LI	Weight (g)
040821	CFSX32AQIS	32	45	34	14	32,5	22	5	10	5,5	30	10	6,6	11	3	3,3	11,5	
040822	CFSX40AQIS	40	55	40	16	38	25	5	10	5,5	35	12	6,6	11	4	4,3	12	
040823	CFSX50AQIS	50	65	45	21	46,5	27	5	10	6,5	40	16	9	15	4	4,3	14	
040824	CFSX63AQIS	63	75	51	21	56,5	32	5	12	6,5	45	16	9	15	4	4,3	14	
040825	CFSX80AQIS	80	95	65	25	72	36	5	16	10	45	20	11	18	4	4,3	16	
040826	CFSX100AQIS	100	115	75	25	89	41	5	16	10	55	20	11	18	4	6,3	16	
040833	CFSX125AQIS	125	140	97	37	110	50	7	20	10	60	30	13,5	20	6	6,3	24	

Perno da ordinare separatamente: per perno vedi pag. 5.40.3 (SECX..ARAQIS)

type: **CMSX**

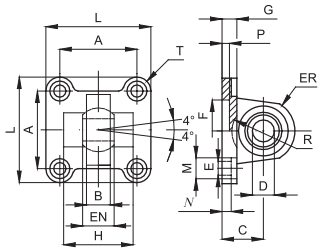

Narrow rear eye for rear male trunnion with bearing DIN 648 K

Code	Item	For cyl. ø mm	A	B	C	D	EN	ER	F	G	E	L	M	N	P	H	R	Weight (g)
040834	CMSX32AQIS	32	32,5	10,5	22	10	14	15	30	10	6,6	45	10,5	5,5	5	-	-	
040835	CMSX40AQIS	40	38	12	25	12	16	18	35	10	6,6	55	11	5,5	5	-	-	
040836	CMSX50AQIS	50	46,5	15	27	16	21	20	40	10	9	65	15	6,5	5	51	19	
040010	CMSX63AQIS	63	56,5	15	32	16	21	23	45	12	9	75	15	6,5	5	-	-	
040837	CMSX80AQIS	80	72	18	36	20	25	27	45	14	11	95	18	10	5	-	-	
040848	CMSX100AQIS	100	89	18	41	20	25	30	55	16	11	115	18	10	5	-	-	
040849	CMSX125AQIS	125	110	26	50	30	37	40	60	20	13,5	140	20	10	7	-	-	

type: **ASSX**

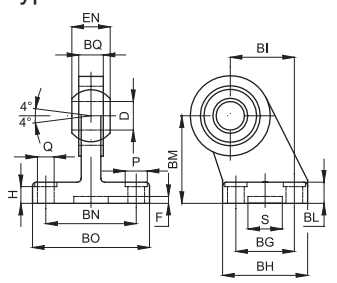

Rear 90° hinge with bearing DIN 648 K

Code	Item	For cyl. ø mm	Q	M	BG	BH	BI	BL	BM	BN	BO	EN	ER	BQ	D	H	S	F	Weight (g)
040850	ASSX32AQIS	32	6,6	11	18	31	21	10	32	38	51	14	15	10,5	10	8,5	20	3	
040851	ASSX40AQIS	40	6,6	11	22	35	24	10	36	41	54	16	18	12	12	8,5	20	3	
040852	ASSX50AQS	50	9	15	30	45	33	12	45	50	65	21	20	15	16	10,5	20	3	
040853	ASSX63AQIS	63	9	15	35	50	37	12	50	52	67	21	23	15	16	10,5	20	3	
040854	ASSX80AQIS	80	11	18	40	60	47	14	63	66	86	25	27	18	20	11,5	20	3	
040855	ASSX100AQIS	100	11	18	50	70	55	15	71	76	96	25	30	18	20	12,5	20	3	
040856	ASSX125AQIS	125	13,5	20	60	90	70	20	90	94	124	37	40	25	30	17	20	3	

type: **SECX - AR**

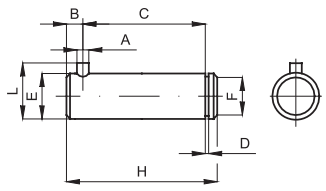

Anti-rotating pin for narrow rear clevis

Code	Item	For cyl. ø mm	A	C	D	E	F	G	H	L	B		Weight (g)
040857	SECX32ARAQIS	32	3	32,5	1,1	10	9,6	4	41	14	4,5	0 -1	
040858	SECX40ARAQIS	40	4	38	1,1	12	11,5	4	48	16	6		
040859	SECX50ARAQIS	50	4	43	1,1	16	15,2	5	54	20	6		
040860	SECX63ARAQIS	63	4	49	101	16	15,2	5	60	20	6		
040861	SECX80ARAQIS	80	4	63	1,3	20	19	6	75	24	6		
040862	SECX100ARAQIS	100	4	73	1,3	20	19	6	85	24	6		
040863	SECX125ARAQIS	125	6	94	1,6	30	28,6	7	110	36	9	0 -2	

It is supplied with 1 seeger included.

type: **FLVX**

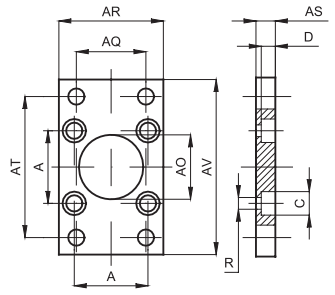

Flange VDMA MF1 / MF2

Code	Item	For cyl. ø mm	A	AP	AO	R	AS	AR	AQ	AT	AV	C	D	Weight (g)
040864	FLVX32AQIS	32	32,5	7	30	6,5	10	45	32	64	80	10,5	5	
040865	FLVX40AQIS	40	38	9	35	6,5	10	52	36	72	90	11	5	
040840	FLVX50AQIS	50	46,5	9	40	9	12	65	45	90	110	15	5,5	
040866	FLVX63AQIS	63	56,5	9	45	9	12	75	50	100	120	15	5,5	
040867	FLVX80AQIS	80	72	12	45	11	16	95	63	126	150	18	8	
040868	FLVX100AQIS	100	89	14	55	11	16	115	75	150	170	18	8	
040869	FLVX125AQIS	125	110	16	60	13,5	20	140	90	180	205	20	9,5	
040870	FLVX160AQIS	160	140	18	65	18	20	180	115	230	260	26	10,5	
040871	FLVX200AQIS	200	175	22	75	18	25	220	135	270	300	26	12,5	

Lowered head screws type VBTRX (see page 5.35.1) must be used with this mounting accessory.

type: **PBX**

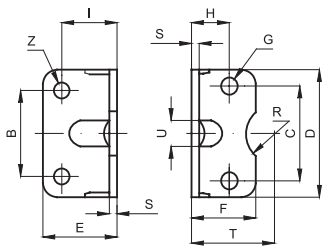

Low foot MS1

Code	Item	For cyl. ø mm	C	B	D	E	F	G	H	I	S	T	R	U	Z	Weight (g)
040872	PBX32AQIS	32	32,5	32	45	35	30	7	15,75	24	4	32	15	11	7	
040873	PBX40AQIS	40	38	36	52	36	30	7	17	28	4	36	17,5	15	9	
040874	PBX50AQIS	50	46,5	45	65	47	36	9	21,75	32	5	45	20	16	9	
040875	PBX63AQIS	63	56,5	50	75	45	35	9	21,75	32	5	50	22,5	18	9	
040876	PBX80AQIS	80	72	63	95	55	47	11	27	41	6	63	22,5	17	12	
040877	PBX100AQIS	100	89	75	115	57	53	11	26,5	41	6	71	27,5	24	14	
040878	PBX125AQIS	125	110	90	140	70	70	14	35	45	8	90	30	-	16	
040879	PBX160AQIS	160	140	115	180	75	100	18	45	60	9	115	32,5	-	18	
040880	PBX200AQIS	200	175	135	220	100	100	18	47,5	70	12	135	37,5	-	22	

It is supplied singly.

type: **CTX**

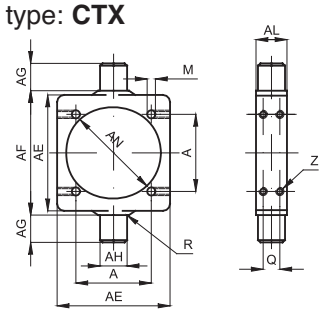

Round adjustable centre trunnion (tie rod) MT4

Code	Item	For cyl. ø mm	A	AE	AL	AH	AG	AF	AN	R	M	Q	Z	Weight (g)
040881	CTX32AQIS	32	32,5	46	15	12	12	50	37	1	6,25	7	M5	
040882	CTX40AQIS	40	38	59	20	16	16	63	46	1,5	6,25	8	M5	
040883	CTX50AQIS	50	46,5	69	20	16	16	75	56	1,6	8,25	8	M6	
040884	CTX63AQIS	63	56,5	84	25	20	20	90	69	1,6	8,25	12	M6	
040885	CTX80AQIS	80	72	102	25	20	20	110	87	1,6	10,25	12	M8	
040550	CTX100AQIS	100	89	125	30	25	25	132	107	2	10,25	15	M8	
040886	CTX125AQIS	125	110	155	32	25	25	160	133	2	12,25	15	M10	
040887	CTX160AQIS	160	140	190	40	32	32	200	170	2,5	16,25	18	M12	
040888	CTX200AQIS	200	175	240	40	32	32	250	211	2,5	16,25	18	M12	

Notes

Executions			
Version	Symbol	Code	Item
1/4” female - female		030651	2MVSXFF
3/8” female - female		030652	3MVSXFF
1/2” female - female		030653	4MVSXFF
1/4” male-female		030654	2MVSXMF
3/8” male-female		030655	3MVSXMF
1/2” male-female		030656	4MVSXMF







Series of miniature ball valves from stainless steel hexagonal bar and manually operated.
In line mounting they work to close or open the flow in both directions.
For use in the alimentary and chemical field.

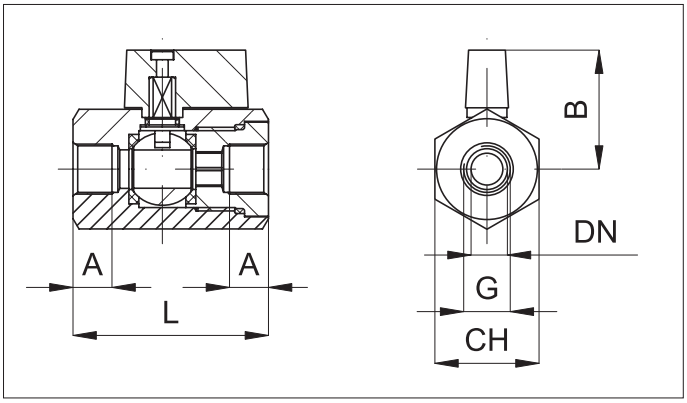

G	A	B	L	CH	DN	Weight gr FF	Weight gr MF
1/4”	10	30	50	27	10	200	170
3/8”	10	30	50	27	10	190	165
1/2”	10	30	50	27	10	175	160

Technical data			
Fluid	Compressed filtered air with or without lubrication. Lubrication, if be used, must be continous.		
Pressure range	0 ÷ 25 bar		
Temperature range	-20 °C ÷ + 150°C		
Orifice	See the dimension DN in the table		
Mounting	In-line		
Materials	Body:	Stainless steel AISI 316	
	Lever:	Nylon 66, reinforced glass	Ball: Stainless steel AISI 316
	Guarnizioni:	PTFE - FKM	

Stainless Steel ancillary valves

Ball valves “full bore”

Executions			
Version	Symbol	Code	Item
1/4”		030681	VSLX014FF
3/8”		030682	VSLX038FF
1/2”		030683	VSLX012FF
3/4”		030684	VSLX034FF
1”		030685	VSLX100FF
1 1/4”		030686	VSLX114FF
1 1/2”		030687	VSLX112FF
2”		030688	VSLX200FF





Series of stainless steel ball valves full bore with long lever and manually operated.
In line mounting they work to close or open the air flow in both directions.
For use in the alimentary and chemical fields.

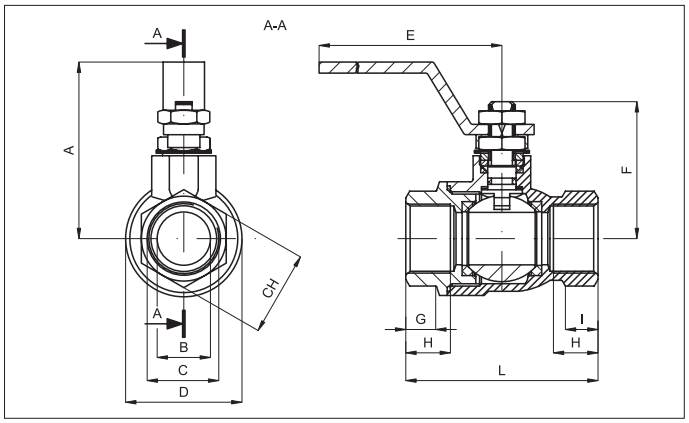

C	A	B	D	E	F	G	H	I	L	CH	Weight (g)
1/4”	52	8	29	110	37	8,5	11,4	8	50	21,5	220
3/8”	52	10	29	110	37	8,5	11,4	8	50	21,5	205
1/2”	55	15	34	110	42	10	15	9,5	60	26,5	275
3/4”	66	20	42,5	140	52	11,5	16,3	11,5	70	31,5	465
1”	70	25	50,5	140	56	14	19,1	13,5	85	40,5	710
1 1/4”	85	32	63	180	68	15,5	21,4	16	95	49,5	1180
1 1/2”	91	40	75,5	180	74	18,5	21,4	16	105	54,5	1740
2”	105	50	91	230	87	22,5	25,7	23,5	125	69,5	2930

Technical data							
Fluid	Compressed air, water, steam, inert gases and fluids						
Pressure range	1/4” - 3/8”- 1/2”= 100 bar	3/4”-1”= 64 bar	1 1/4”-1 1/2”-2”= 40 bar				
Temperature ange	-20 °C ÷ + 150°C						
Orifice	1/4”-3/8”= 10 mm	1/2”= 15 mm	3/4”= 20 mm	1”= 25 mm	1 1/4”= 32 mm	1 1/2= 40 mm	2”= 50 mm
Flow	1/4” - 3/8”= 3.000 l/min	1/2”= 11.500 l/min	3/4”= 21.000 l/min	1”= 33.000 l/min			
	1 1/4”= 50.000 l/min	1 1/2”= 84.000 l/min	2”= 97.000 l/min.				
Mounting	In-line						
Materials	Body:	Stainless steel AISI 316					
	Lever:	Stainless steel AISI 316	Ball: Stainless steel AISI 316				
	Seals:	PTFE - FKM					

Executions			
Version	Symbol	Code	Item
1/8”		030110	1FFX
1/4”		030111	2FFX
3/8”		030112	3FFX
1/2”		030113	4FFX
3/4”	A B	030114	5FFX
1”		030115	6FFX
1 1/4”		030129	14FFX
1 1/2”		030130	12FFX
2”		030131	20FFX

Note: available on request with NPTF thread.



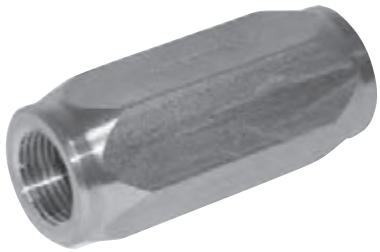

Series of uni-directional ball valves from hexagonal bar, female threaded.
In line mounting they allow the compressed air to flow in one direction only; therefore, they are useful in those applications where no return of the compressed air to the supply is admitted.

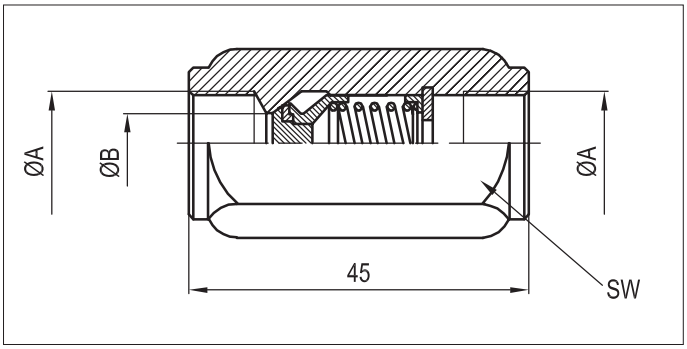

A	L	SW	Ø B	Orifice mm²	PMax bar	Weight gr.
1/8”	42	14	5	18	350	50
1/4”	50	19	7	22	350	90
3/8”	60	24	10	42	350	160
1/2”	65	27	11	75	350	280
3/4”	75	34	17	126	300	350
1”	93	41	21	230	250	580
1” 1/4	110	50	29	340	250	360
1” 1/2	112	55	34	509	250	1020
2”	120	75	48	1640	200	2200

Technical data		
Fluid	Compressed filtered air with or without lubrication	
Pressure range	from 0,5 bar to see table	
Temperature range	-20 °C ÷ + 150°C	
Orifice	see table	
Flow		
Mounting	In-line	
Materiali	Body:	Stainless steel AISI 316
	Lever:	Stainless steel AISI 316 — Ball: Stainless steel AISI 316
	Seals:	FKM

Stainless Steel ancillary valves

Quick exhaust valves

Execution			
Version	Symbol	Code	Item
11/8”	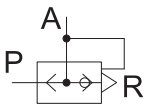	030810	1VSRX
1/4”		030809	2VSRX
3/8”		030811	3VSRX
1/2”		030812	4VSRX
3/4”		030813	5VSRX
1”		030814	6VSRX

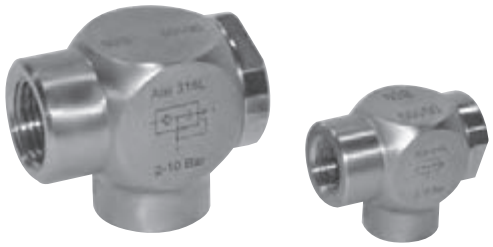

Series of stailess steel quick exhaust valves used to increase the speed of a cylinder.
The valve must be mounted directly on the port of the cylinder to achieve the maximum possible speed.
When the supply is in P the diaphragm closes the exhaust R and so the air flows through A into the chamber of the cylinder. When the supply in P fails the diaphragm closes P and this is due to the exhaust air from A to R. The noise of the exhaust can be reduced by a silencer.
For stainless steel silencers see from page 5.190.1

Options		Suffix
Seals FKM	max 150 °C	V
Threaded NPTF		NPT

How to order : 2VSRVXNPT

2VSRX	NPT
Version	Option

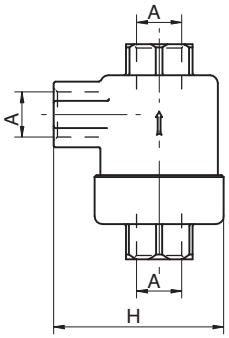

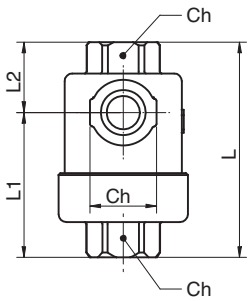

Version	L	L_1	L_2	H	CH
1/8”	37,5	21	16,5	32	22
1/4”	37,5	21	16,5	32	22
3/8”	44,5	25,5	19	37	26
1/2”	54	23	31	45	32
3/4”	79	35	44	65	46
1”	79	35	44	65	46

Technical data						
Fluid	Compressed filtered air with or without lubrication					
Pressure range	2 ÷ 10 bar					
Temperature range	1/8” and 1/4” = -10 °C ÷ + 140 °C, 3/8” - 1/2” - 3/4” and 1” = -20 °C ÷ + 80 °C					
Orifice (mm)	1/8” = 6	1/4” = 8	3/4” = 10	1/2” = 12	3/4” = 16	1” = 18
Materials	Body:	Stainless steel AISI 316L				
	Seals:	1/8” and 1/4” = FKM 3/8” - 1/2” - 3/4” - 1” = Polyurethane				

Stainless Steel push-in fittings

Series RX, in AISI 316 L

Version	Type
BSPT stud	RX11
BSP stud	RX12
Union	RX26
Bulkhead	RX27
Reducer	RX25
BSPT elbow	RX14
BSPT swivel elbow	RX15
BSP swivel elbow	RX16
Equal elbow	RX28
BSPT swivel tee	RX20
BSP swivel tee	RX21
Equal tee	RX29
Single hollow bolt	RX31
Single banjo	RX35

External tube ø (mm)	4	5	6	8	10	12
Code	04	05	06	08	10	12

Threads	M5	1/8”	1/4”	3/8”	1/2”
Code	M5	18	14	38	12

APPLICATION FIELDS:
Chemistry
Pharmaceutics
Medicine
Alimentary field
Electronics





Series of stainless steel push-in fittings with reduced dimensions and new collet and release collar.
They are for connecting nylon and polyurethane tubes.
Available in various configurations (studs, elbows, T) and with threads Gas pre-tefloned taper (BSPT) and Gas parallel (BSP) with sealing o-ring.
The stud threaded versions are standard with external and internal hexagonal key (for mounting in narrow places).

* How to order: RX110618

RX11	06	18
Type	Tube ø code	Tube or thread code

* For standard items, codes and dimensions see tables from page. 5.150.2

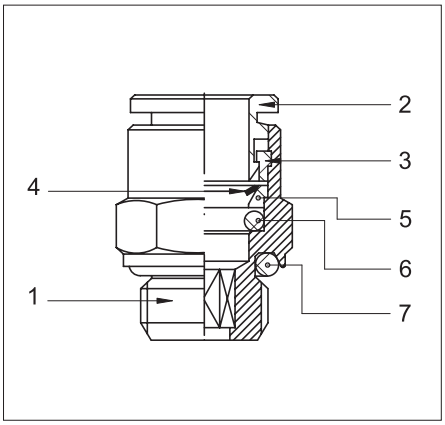

1 = Body
2 = Release collar
3 = Sealing ring
4 = Collet
5 = Protection seal
6 = O-ring
7 = O-ring

Technical data		
Fluid	Compressed air, gases, acids, fluids	
Pressure range	0,5 ÷ 12 bar	
Temperature range	-20 °C ÷ + 150°C	
Parallel threads	UNI - ISO 228 / 1 (BSP)	
Taper threads	UNI - ISO 7 / 1 (BSPT)	
Metric threads	ISO R / 262	
Connection tubes	Calibrated nylon, polyurethane and rilsan	
Tube tolerances	± 0,05 mm	
Materials	Body and release collar:	Stainless steel AISI 316 L
	Sealing ring and protection ring:	Stainless steel AISI 316 L
	Collet:	Stainless steel AISI 301
	Seals:	FKM

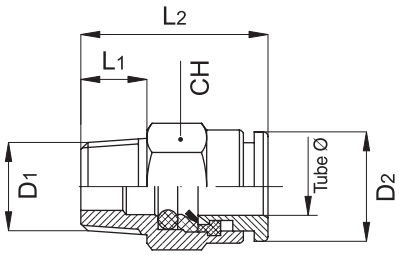

BSPT stud

Code	Item	Tube ø	D_1	D_2	L_1	L_2	CH
020901	RX 11 04 18	4	1/8”	9	7,5	15,5	10
020902	RX 11 04 14	4	1/4”	9	11	20	14
020903	RX 11 06 18	6	1/8”	12	7,5	20,5	12
020904	RX 11 06 14	6	1/4”	12	11	20	14
020905	RX 11 08 18	8	1/8”	14	7,5	24,5	14
020906	RX 11 08 14	8	1/4”	14	11	23	14
020907	RX 11 10 14	10	1/4”	16	11	30	16
020908	RX 11 10 38	10	3/8”	16	11,5	23,5	17
020909	RX 11 12 38	12	3/8”	18	11,5	27	18
020910	RX 11 12 12	12	1/2”	18	14	27	22

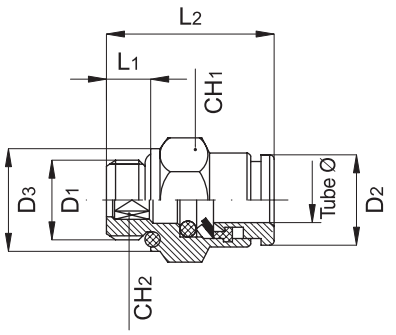

BSP stud

Code	Item	Tube ø	D_1	D_2	D_3	L_1	L_2	CH_1	CH_2
020915	RX 12 04 M5	4	M5	9	8	4	19	9	-
020916	RX 12 04 18	4	1/8”	9	13	5	16	13	3
020917	RX 12 06 18	6	1/8”	12	13	5	19	13	4
020918	RX 12 06 14	6	1/4”	12	16	6,5	18,5	16	4
020919	RX 12 08 18	8	1/8”	14	13	5	22,5	14	6
020920	RX 12 08 14	8	1/4”	14	16	6,5	21	16	6

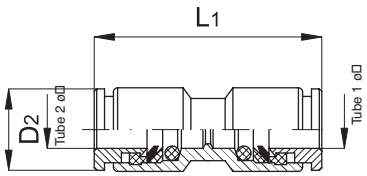

Union

Code	Item	Tube $_1$ ø	ø Tubo $_2$	D_2	L_1
020925	RX 26 04 04	4	4	9	27
020926	RX 26 06 06	6	6	12	32,5
020927	RX 26 08 08	8	8	14	33
020928	RX 26 10 10	10	10	16	37,5
020929	RX 26 12 12	12	12	18	39,5

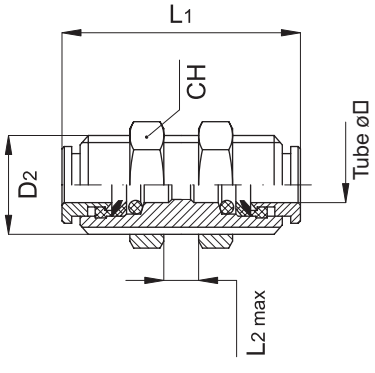

Bulkhead

Code	Item	Tube ø	D_2	L_1	L_2 max	CH
020930	RX 27 04 04	4	12x1	27	11	15
020931	RX 27 06 06	6	14x1	32,5	16	17
020932	RX 27 08 08	8	16x1	33	17	19
020933	RX 27 10 10	10	18x1	37,5	19	21
020934	RX 27 12 12	12	20x1	39,5	20	24

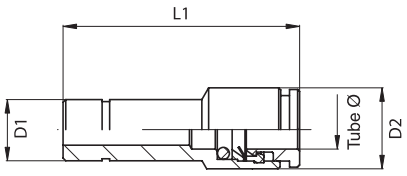

Reducer

Code	Item	Tube ø	D_1	D_2	L_1
020921	RX 25 04 06	4	6	9	31
020922	RX 25 06 08	6	8	12	33
020923	RX 25 08 10	8	10	14	34,5

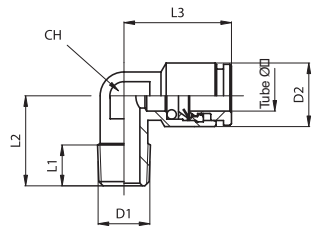

BSPT elbow

Code	Item	Tube ø	D_1	D_2	L_1	L_2	L_3
020956	RX 14 04 18	4	1/8”	9	7,5	16	17
020957	RX 14 06 18	6	1/8”	12	7,5	16	20
020958	RX 14 06 14	6	1/4”	12	11	20	20
020959	RX 14 08 18	8	1/8”	14	7,5	17	21
020949	RX 14 08 14	8	1/4”	14	11	20	21

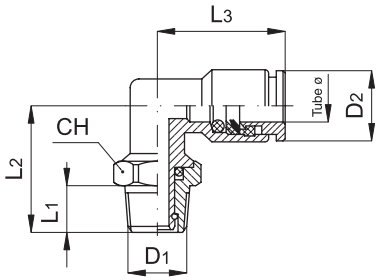

BSPT swivel elbow

Code	Item	Tube ø	D_1	D_2	L_3	L_1	L_2	CH
020936	RX 15 04 18	4	1/8”	9	17	7,5	17,5	10
020937	RX 15 06 18	6	1/8”	12	21,5	7,5	20	13
020938	RX 15 06 14	6	1/4”	12	21,5	11	24	14
020939	RX 15 08 18	8	1/8”	14	22	7,5	20	13
020940	RX 15 08 14	8	1/4”	14	22	11	24	14
020941	RX 15 10 14	10	1/4”	16	25,5	11	26,5	16
020942	RX 15 10 38	10	3/8”	16	25,5	11,5	27	17
020943	RX 15 12 38	12	3/8”	18	28	11,5	30,5	21
020944	RX 15 12 12	12	1/2”	18	28	14	33,5	22

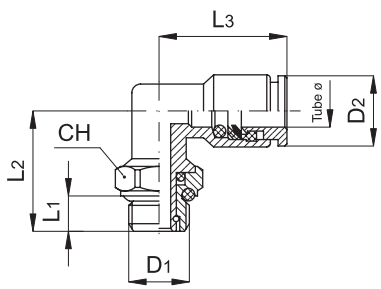

BSP swivel elbow

Code	Item	Tube ø	D_1	D_2	L_1	L_2	L_3	CH
020950	RX 16 04 M5	4	M5	9	4	14	17	9
020951	RX 16 04 18	4	1/8”	9	5	16	17	13
020952	RX 16 06 18	6	1/8”	12	5	18	21,5	13
020953	RX 16 06 14	6	1/4”	12	6,5	20	21,5	16
020954	RX 16 08 18	8	1/8”	14	5	18	22	13
020955	RX 16 08 14	8	1/4”	14	6,5	20	22	16

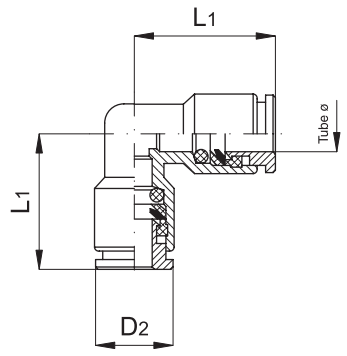

Equal elbow

Code	Item	Tube ø	D2	L1
020960	RX 28 04 04	4	9	17
020961	RX 28 06 06	6	12	20
020962	RX 28 08 08	8	14	21
020963	RX 28 10 10	10	16	25
020964	RX 28 12 12	12	18	27

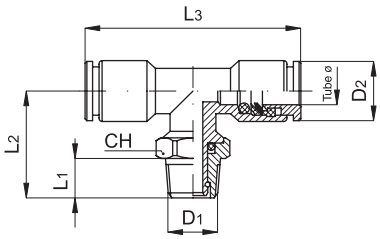

BSPT swivel elbow

Code	Item	Tube ø	D1	D2	L1	L2	L3	CH
020966	RX 20 04 18	4	1/8”	9	7,5	21,5	34	10
020967	RX 20 06 18	6	1/8”	12	7,5	24,5	42	13
020968	RX 20 06 14	6	1/4”	12	11	28,5	42	14
020969	RX 20 08 18	8	1/8”	14	7,5	24,5	43	13
020970	RX 20 08 14	8	1/4”	14	11	28,5	43	14
020971	RX 20 10 14	10	1/4”	16	11	32	50	16
020972	RX 20 10 38	10	3/8”	16	11,5	32,5	50	17

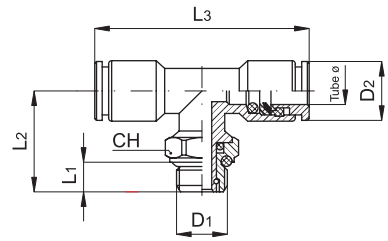

BSP swivel tee

Code	Item	Tube ø	D1	D2	L1	L2	L3	CH
020974	RX 21 04 M5	4	M5	9	4	18	34	9
020975	RX 21 04 18	4	1/8”	9	5	20	34	13
020976	RX 21 06 18	6	1/8”	12	5	22,5	42	13
020977	RX 21 06 14	6	1/4”	12	6,5	24,5	42	16
020978	RX 21 08 18	8	1/8”	14	5	22,5	43	13
020979	RX 21 08 14	8	1/4”	14	6,5	24,5	43	16

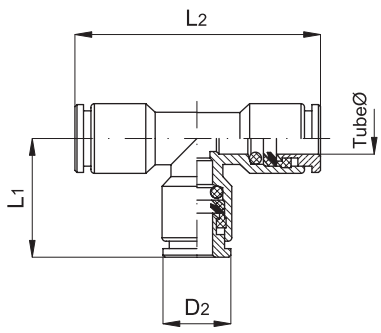

Equal tee

Code	Item	Tube ø	D2	L1	L2
020995	RX 29 04 04	4	9	17	34
020996	RX 29 06 06	6	12	20	40
020997	RX 29 08 08	8	14	21	42
020998	RX 29 10 10	10	16	25	50
020999	RX 29 12 12	12	18	27	54

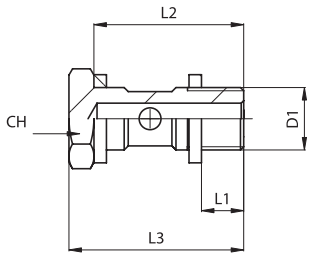

Single hollow bolt

Code	Item	D_1	L_1	L_2	L_3	CH
020980	RX 31 00 18	1/8”	5,5	23	27	14
020948	RX 31 00 14	1/4”	6,5	26,5	31,5	17

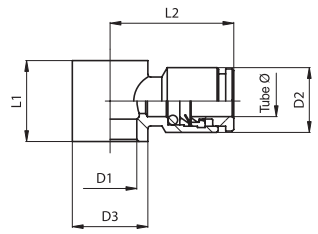

Single banjo

Code	Item	Tube ø	D_1	D_2	D_3	L_1	L_2
020982	RX 35 04 18	4	1/8”	9	14	15	19,5
020981	RX 35 06 18	6	1/8”	12	14	15	22
020973	RX 35 06 14	6	1/4”	12	18	17	23,5
020965	RX 35 08 18	8	1/8”	14	14	15	22,5
020945	RX 35 08 14	8	1/4”	14	18	17	24

Notes

Stainless Steel rapid fittings

Series CX, in AISI 316 L

Version	Type
BSPT stud	CX11
Union	CX14
BSPT elbow	CX16
Elbow union	CX18
BSTP central tee	CX20
BSTP lateral tee	CX21
Equal tee	CX19
Nut	CX27



Series of stainless steel rapid fittings in AISI 316L suitable for applications with very high temperatures and/or aggressive fluids not compatible with standard seals.

*How to order: CX110618

CX11	06	18
Type	Tube ø code	Tube or thread code

* For standard items, codes and dimensions see tables from page 5.155.2

External tube ø (mm)	4	5	6	8	10
Code	04	05	06	08	10

Threads	1/8”	1/4”	3/8”
Code	18	14	38

Technical data	
Fluid	All those compatible with stainless steel AISI 316 L
Max pressure	25 bar
Temperature range	-40 °C ÷ + 200°C
Taper threads	UNI - ISO 7 / 1 (BSPT)
Connection tubes	Suggested PTFE
Tube tolerances	Up to 10 mm: ± 0,05 mm - ø 12 mm and 15 mm: ± 0,1 mm
Materials	Body and nut: Stainless steel AISI 316 L

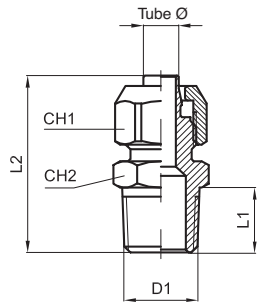

BSPT stud

Code	Item	Tube ø	D_1	L_1	L_2	CH_1	CH_2	Weight gr.
021560	CX 11 06 18	6-4	1/8”	7,5	26	34	10	12
021561	CX 11 06 14	6-4	1/4”	11	29,5	12	14	18
021562	CX 11 08 18	8-6	1/8”	7,5	26,5	14	13	16,5
021563	CX 11 08 14	8-6	1/4”	11	30	14	14	20,5
021564	CX 11 10 14	10-8	1/4”	11	32,5	16	14	24
021565	CX 11 10 38	10-8	3/8”	11,5	33	16	17	30

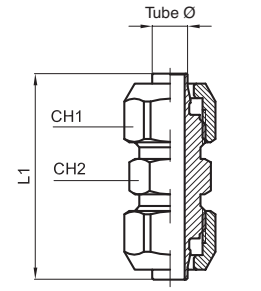

Union

Code	Item	Tube ø	L_1	CH_1	CH_2	Weight gr.
021566	CX 14 06 00	6-4	34	12	10	20
021567	CX 14 08 00	8-6	35	14	12	26
021568	CX 14 10 00	10-8	39	16	14	36

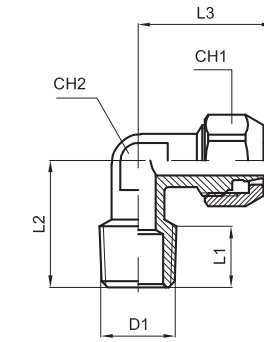

BSPT elbow

Code	Item	Tube ø	D_1	L_1	L_2	L_3	CH_1	CH_2	Weight gr.
021569	CX 16 06 18	6-4	1/8”	7,5	17	23	12	10	17
021570	CX 16 06 14	6-4	1/4”	11	21,5	23	12	10	20
021571	CX 16 08 18	8-6	1/8”	7,5	17	23	14	10	18
021572	CX 16 08 14	8-6	1/4”	11	21,5	23	14	10	21
021573	CX 16 10 14	10-8	1/4”	11	21,5	25,5	16	10	25

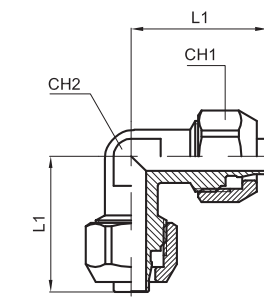

Elbow union

Code	Item	Tube ø	L_1	L_1	CH_1	CH_2	Weight gr.
021574	CX 18 06 00	6-4	22,5	22,5	12	10	25
021575	CX 18 08 00	8-6	23	23	14	10	27
021576	CX 18 10 00	10-8	25,5	25,5	16	10	33

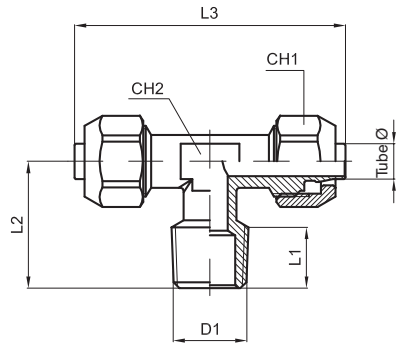

BSTP central tee

Code	Item	Tube ø	D_1	L_1	L_2	L_3	CH_1	CH_2	Weight gr.
021577	CX 20 06 18	6-4	1/8”	8	17	46	12	10	29
021578	CX 20 06 14	6-4	1/4”	11	21,5	46	12	10	32
021579	CX 20 08 18	8-6	1/8”	8	17	46	14	10	30
021580	CX 20 08 14	8-6	1/4”	11	21,5	46	14	10	34
021581	CX 20 10 14	10-8	1/4”	11	21,5	51	16	10	40

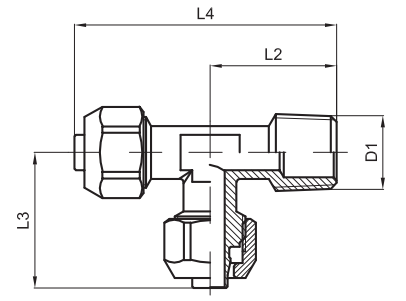

BSTP lateral tee

Code	Item	Tube ø	D_1	L_1	L_2	L_3	L_4	CH_1	CH_2	Weight gr.
021582	CX 21 06 18	6-4	1/8”	8	17	23	40	12	10	29
021583	CX 21 06 14	6-4	1/4”	11	21,5	23	44,5	12	10	32
021584	CX 21 08 18	8-6	1/8”	8	17	23	40	14	10	30
021585	CX 21 08 14	8-6	1/4”	11	21,5	23	44,5	14	10	34
021586	CX 21 10 14	10-8	1/4”	11	21,5	25,5	47	16	10	40

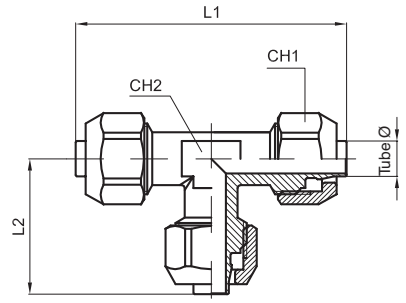

Equal tee

Code	Item	Tube ø	L_1	L_1	CH_1	CH_2	Weight gr.
021587	CX 19 06 00	6-4	45	22,5	12	10	36
021588	CX 19 08 00	8-6	46	23	14	10	39
021589	CX 19 10 00	10-8	51	25,5	16	10	49

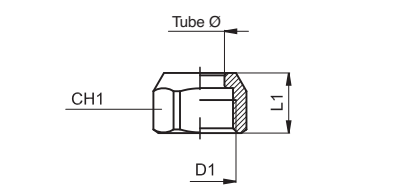

Nut

Code	Item	Tube ø	D_1	L_1	CH_1	Weight gr.
021590	CX 27 06 10	6-4	M10x1	10	12	4
021591	CX 27 08 12	8-6	M12x1	10	14	5
021592	CX 27 10 14	10-8	M14x1	11	16	7

Stainless Steel compression fittings
Series OX, in AISI 316

Version	Type
BSPT stud	OX11
Female BSPT stud	OX13
Union	OX14
Bulkhead	OX15
BSPT elbow	OX16
Equal elbow	OX17
BSPT - compression tee	OX19
Equal tee	OX18
Equal +	OX28
Nut	OX21
Ogive	OX22
Tube insert	OX23

External tube ø (mm)	6	8	10	12	14	15	16	18
Code	06	08	10	12	14	15	16	18

Threads	1/8”	1/4”	3/8”	1/2”
Code	18	14	38	12





Series of stainless steel AISI 316 TI compression fittings conforming to DIN 2353 standards for metal tubes.
The ogive crushing onto the tube, by screwing down the external nut, allows to get a safe connection and to work even at high pressures.
The ogive is single cone.
This series of fittings can also be used for connecting non-stiff tubes and this by applying a tube insert inside the tube.
Available with threads Gas taper (BSPT) and Gas parallel (BSP).

* How to order: 0X110814

OX11	08	14
Type	Tube ø code	Tube or thread code

* For standard items, codes and dimensions see tables from page 5.160.2

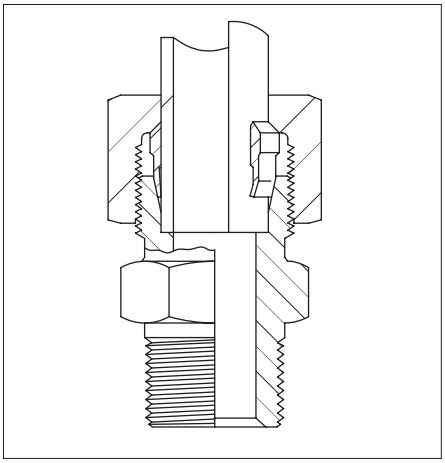

Technical data	
Fluid	Compressed air, aggressive fluids, oil at low pressure
Pressure	Tube from 6 to 15 mm: 250 bar - Tube 16 and 15 mm: 160 bar
Temperature	According to the tube used
Taper threads	UNI - ISO 7 / 1 (BSPT)
Connection tubes	Metal or rilsan, nylon, polyurethane, polyethylene (with insert tube)
Materials	Completely in stainless steel AISI 316 TI

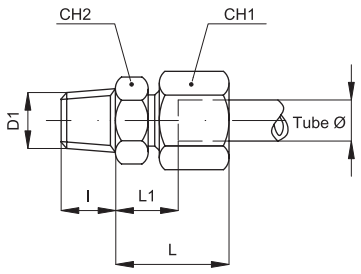

BSPT stud

Code	Item	Tube ø	D_1	I	L	L_1	CH_1	CH_2
027031	OX 11 06 18	6	1/8”	10	23	7	14	12
027053	OX 11 08 18	8	1/8”	10	23	8	17	14
027033	OX 11 08 14	8	1/4”	13	25	8	17	17
027034	OX 11 08 38	8	3/8”	13	23	9	17	19
027035	OX 11 08 12	8	1/2”	16	23	11	17	22
027036	OX 11 10 14	10	1/4”	13	26	9	19	17
027037	OX 11 10 38	10	3/8”	13	24	10	19	19
027038	OX 11 10 12	10	1/2”	16	24	11	19	22
027039	OX 11 12 14	12	1/4”	13	25	10	22	19
027040	OX 11 12 38	12	3/8”	13	27	10	22	19
027041	OX 11 12 12	12	1/2”	16	25	10	22	22
027042	OX 11 14 12	14	1/2”	16	29	11	27	24
027043	OX 11 15 12	15	1/2”	16	29	11	27	24
027044	OX 11 16 12	16	1/2”	16	31	11,5	32	27
027045	OX 11 18 12	18	1/2”	16	31	11,5	32	27

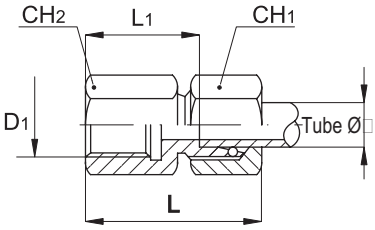

Female BSP stud

Code	Item	Tube ø	D_1	L	L_1	CH_1	CH_2
027081	OX 13 06 18	6	1/8”	34	19	14	14
027082	OX 13 08 14	8	1/4”	39	24	17	19
027083	OX 13 10 14	10	1/4”	40	25	19	19
027084	OX 13 12 38	12	3/8”	41	26	22	24
027085	OX 13 14 12	14	1/2”	46	31	27	27
027086	OX 13 15 12	15	1/2”	46	31	27	27
027087	OX 13 16 12	16	1/2”	47	30,5	32	27
027088	OX 13 18 12	18	1/2”	47	30,5	32	27

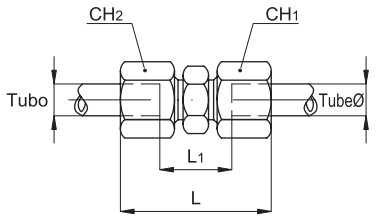

Union

Code	Item	Tube ø	L	L_1	CH_1	CH_2
027001	OX 14 06 06	6	39	10	14	12
027002	OX 14 08 08	8	40	11	17	14
027003	OX 14 10 10	10	42	13	19	17
027004	OX 14 12 12	12	43	14	22	19
027005	OX 14 14 14	14	46	16	27	24
027006	OX 14 15 15	15	46	16	27	24
027007	OX 14 16 16	16	48	16	32	27
027008	OX 14 18 18	18	48	16	32	27

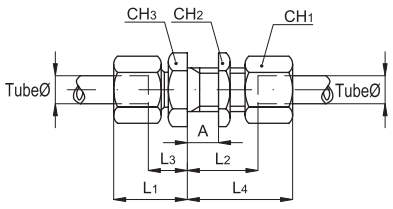

Bulkhead

Code	Item	Tube ø	L_1	L_2	L_3	L_4	CH_1	CH_2	CH_3
027137	OX 15 06 06	6	22	27	7	42	14	17	17
027138	OX 15 08 08	8	23	27	8	42	17	19	19
027139	OX 15 10 10	10	25	28	10,5	43	19	22	22
027140	OX 15 12 12	12	25	29	10	44	22	24	24
027141	OX 15 14 14	14	27	31	12	46	27	30	27
027142	OX 15 15 15	15	27	31	12	46	27	30	27
027143	OX 15 16 16	16	30	32,5	13,5	49	32	36	32
027144	OX 15 18 18	18	30	32,5	13,5	49	32	36	32

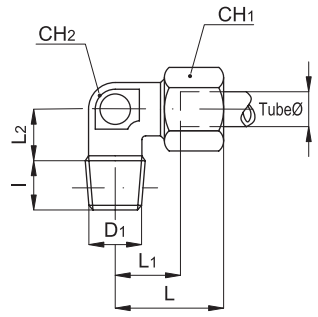

BSPT elbow

Code	Item	Tube ø	D1	I	L	L1	L2	CH1	CH2
027091	OX 16 06 18	6	1/8”	8	27	12	15	14	12
027092	OX 16 06 14	6	1/4”	12	27	15,5	15	14	12
027093	OX 16 08 18	8	1/8”	12	29	15,5	18	17	12
027094	OX 16 08 14	8	1/4”	12	29	14	18	17	12
027095	OX 16 08 38	8	3/8”	12	29	17,5	18	17	17
027096	OX 16 10 14	10	1/4”	12	30	15	19	19	14
027097	OX 16 10 38	10	3/8”	12	30	17	19	19	17
027099	OX 16 12 14	12	1/4”	12	32	17	20	22	17
027100	OX 16 12 38	12	3/8”	12	32	17	20	22	17
027101	OX 16 12 12	12	1/2”	14	32	20	20	22	19
027102	OX 16 14 12	14	1/2”	14	36	21	24	27	19
027103	OX 16 15 12	15	1/2”	14	36	21	24	27	19
027104	OX 16 16 12	16	1/2”	14	40	23	26	32	24
027105	OX 16 18 12	18	1/2”	14	40	23	26	32	24

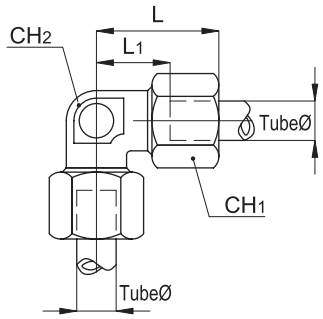

Equal elbow

Code	Item	Tube ø	L	L1	CH1	CH2
027061	OX 17 06 06	6	27	12	14	12
027062	OX 17 08 08	8	29	14	17	12
027063	OX 17 10 10	10	30	15	19	14
027064	OX 17 12 12	12	32	17	22	17
027065	OX 17 14 14	14	36	21	27	19
027066	OX 17 15 15	15	36	21	27	19
027067	OX 17 16 16	16	40	23,5	32	24
027068	OX 17 18 18	18	40	23,5	32	24

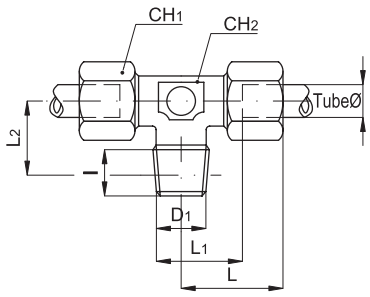

BSPT - compression tee

Code	Item	Tube ø	D1	I	L	L1	L2	CH1	CH2
027151	OX 19 06 18	6	1/8”	8	27	12	15	14	12
027153	OX 19 08 14	8	1/4”	12	29	14	18	17	12
027156	OX 19 12 38	12	3/8”	12	32	17	20	22	17
027157	OX 19 14 12	14	1/2”	14	36	21	24	27	19
027158	OX 19 15 12	15	1/2”	14	36	21	24	27	19
027159	OX 19 16 12	16	1/2”	14	40	23,5	26,5	32	24
027160	OX 19 18 12	18	1/2”	14	40	23,5	26,5	32	24

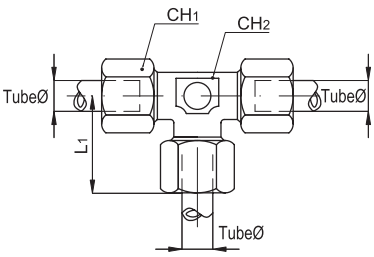

Equal tee

Code	Item	Tube ø	L	L1	CH1	CH2
027121	OX 18 06 06	6	27	12	14	12
027122	OX 18 08 08	8	29	14	17	12
027123	OX 18 10 10	10	30	15	19	14
027124	OX 18 12 12	12	32	17	22	17
027125	OX 18 14 14	14	36	21	27	19
027126	OX 18 15 15	15	36	21	27	19
027127	OX 18 16 16	16	40	23,5	32	24
027128	OX 18 18 18	18	40	23,5	32	24

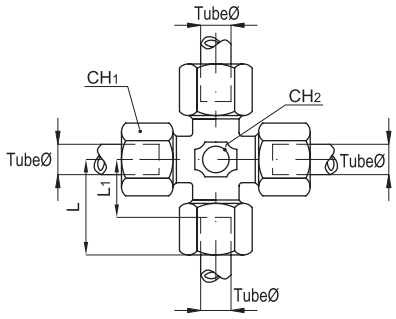

Equal +

Code	Item	Tube ø	L	L_1	CH_1	CH_2
027211	OX 28 06 06	6	27	12	14	12
027212	OX 28 08 08	8	29	14	17	12
027213	OX 28 10 10	10	30	15	19	14
027214	OX 28 12 12	12	32	17	22	17
027215	OX 28 14 14	14	36	21	27	19
027216	OX 28 15 15	15	36	21	27	19
027217	OX 28 16 16	16	40	23,5	32	24
027218	OX 28 18 18	18	40	23,5	32	24

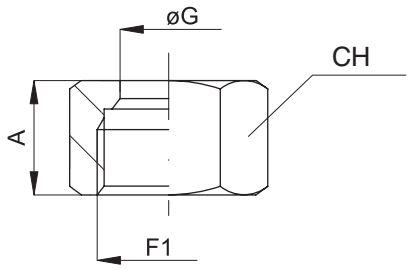

Nut

Code	Item	Tube ø	F_1	A	CH	ø G
027241	OX 21 06 06	6	12x1,5	14,5	14	6
027242	OX 21 08 08	8	14x1,5	14,5	17	8
027243	OX 21 10 10	10	16x1,5	15,5	19	10
027244	OX 21 12 12	12	18x1,5	15,5	22	12
027245	OX 21 14 14	14	22x1,5	17	27	15
027246	OX 21 15 15	15	22x1,5	17	27	15
027247	OX 21 16 16	16	26x1,5	18	32	18
027248	OX 21 18 18	18	26x1,5	18	32	18

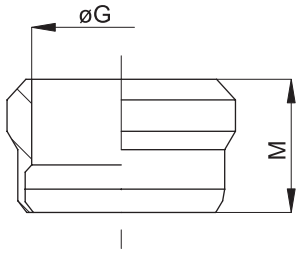

Ogive

Code	Item	Tube ø	ø G	M
027271	OX 22 06 06	6	6	9,5
027272	OX 22 08 08	8	8	9,5
027273	OX 22 10 10	10	10	10
027274	OX 22 12 12	12	12	10
027275	OX 22 14 14	14	14	10
027276	OX 22 15 15	15	15	10
027277	OX 22 16 16	16	16	9,5
027278	OX 22 18 18	18	18	9,5

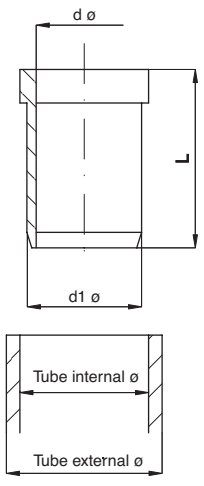

Tube insert

Code	Item	Tube ø extern. x thickness	Tube intern. ø	ø d	ø d_1	L
027293	OX 23 06 06	6x1	4	2,6	3,8	15,5
027290	OX 23 08 08	8x1	6	4,6	5,8	15,5
027291	OX 23 10 10	10x1	8	6,6	7,8	16,5
027292	OX 23 12 12	12x1	10	8,6	9,8	16,5
027294	OX 23 14 14	14x1	13	11,2	12,8	17
027295	OX 23 15 15	15x1,5	12	10,2	11,8	17
027296	OX 23 16 16	16x1	16	14,2	15,8	17,5
027297	OX 23 18 18	18x1,5	15	13,2	14,8	17,5

Stainless Steel standard fittings

Series AX, in AISI 316

Version	Type	Version	Type
M-F BSPT reducer	AX002	Female plug	AX010
M-F BSPT stem increaser	AX004	Nut	AX013
BSPT nipple	AX006	BSPT - hose adapter	AX015
BSPT reducing nipple	AX027	BSP female union	AX032
Threaded nipple	AX028	M-F BSP union	AX033
Solder fitting	AX029	BSP 45°, female elbow	AX034
BSPT extended nipple	AX030	F-F elbow	AX021
Female socket	AX007	M-F elbow	AX022
Female reducing socket	AX031	F-F-F tee	AX023
Male BSPT plug	AX016	F-F-F-F +	AX026



Series of standard fittings in stainless steel AISI 316 available in various configurations to adapt the connections of every installation according to one's requirements.
Available with Gas taper threads (BSPT) and fit for pneumatic, hydraulic (low pressure) and hydropneumatic installations, for alimentary, chemical, medical fields etc..

* How to order: AX0061212

AX006	12	12
Type	Thread	Thread

* For standard items, codes and dimensions see tables from page 5.165.2

Threads	1/8"	1/4"	3/8"	1/2"	3/4"	1"	1 1/4"	1 1/2"	2"	2 1/2"	3"	4"
Code	18	14	38	12	34	01	41	21	02	22	03	04

Technical data	
Fluid	Compressed air, aggressive fluids, oil at low pressure
Pressure	60 bar
Taper threads	UNI - ISO 7 / 1 (BSPT)
Materials	Stainless steel AISI 316 TI

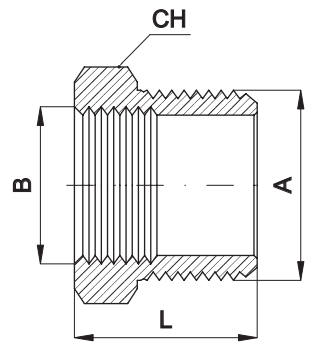

M-F BSPT reducer

Code	Item	A	B	L	CH
026161	AX002 14 18	1/4”	1/8”	18	14
026163	AX002 38 18	3/8”	1/8”	20	17
026162	AX002 38 14	3/8”	1/4”	20	17
026165	AX002 12 38	1/2”	3/8”	23	22
026164	AX002 12 14	1/2”	1/4”	23	22
026166	AX002 34 38	3/4”	3/8”	27	27
026167	AX002 34 12	3/4”	1/2”	27	27
026168	AX002 01 12	1”	1/2”	30	36
026169	AX002 01 34	1”	3/4”	30	36
026170	AX002 41 34	1 1/4”	3/4”	31	42
026171	AX002 41 01	1 1/4”	1”	31	42
026172	AX002 21 01	1 1/2”	1”	33	50
026173	AX002 21 41	1 1/2”	1 1/4”	33	50
026174	AX002 02 41	2”	1 1/4”	37	60
026175	AX002 02 21	2”	1 1/2”	37	60
026176	AX002 22 21	2 1/2”	1 1/2”	43	77
026177	AX002 22 02	2 1/2”	2”	43	77
026178	AX002 03 02	3”	2”	48	90
026179	AX002 03 22	3”	2 1/2”	48	90

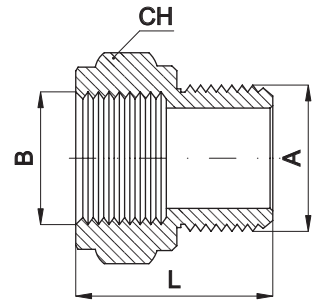

M-F BSPT stem increaser

Code	Item	B	A	CH	L
026251	AX004 18 18	1/8”	1/8”	17	21
026252	AX004 14 18	1/4”	1/8”	19	24
026253	AX004 14 14	1/4”	1/4”	19	27
026254	AX004 38 18	3/8”	1/8”	24	25
026255	AX004 38 14	3/8”	1/4”	24	28
026256	AX004 38 38	3/8”	3/8”	24	31
026257	AX004 12 14	1/2”	1/4”	30	30
026258	AX004 12 38	1/2”	3/8”	30	33
026259	AX004 12 12	1/2”	1/2”	30	34
026260	AX004 34 14	3/4”	1/4”	36	31
026261	AX004 34 38	3/4”	3/8”	36	34
026262	AX004 34 12	3/4”	1/2”	36	35
026263	AX004 34 34	3/4”	3/4”	36	37
026264	AX004 01 38	1”	3/8”	41	37
026265	AX004 01 12	1”	1/2”	41	38
026266	AX004 01 34	1”	3/4”	41	40
026267	AX004 01 01	1”	1”	41	41
026268	AX004 41 34	1 1/4”	3/4”	50	40
026269	AX004 41 01	1 1/4”	1”	50	41
026270	AX004 41 41	1 1/4”	1 1/4”	50	44
026271	AX004 21 34	1 1/2”	3/4”	55	43
026272	AX004 21 01	1 1/2”	1”	55	44
026273	AX004 21 41	1 1/2”	1 1/4”	55	47
026274	AX004 21 41	1 1/2”	1 1/2”	55	53

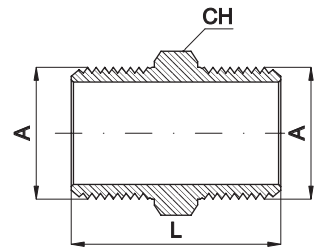

BSPT nipple

Code	Item	A	A	L	CH
026131	AX006 18 18	1/8”	1/8”	24	12
026132	AX006 14 14	1/4”	1/4”	29	14
026133	AX006 38 38	3/8”	3/8”	32	17
026134	AX006 12 12	1/2”	1/2”	38	22
026135	AX006 34 34	3/4”	3/4”	45	27
026136	AX006 01 01	1”	1”	47	36
026137	AX006 41 41	1 1/4”	1 1/4”	52	42
026138	AX006 21 21	1 1/2”	1 1/2”	55	50
026139	AX006 02 02	2”	2”	62	60
026140	AX006 22 22	2 1/2”	2 1/2”	71	77
026141	AX006 03 03	3”	3”	82	90

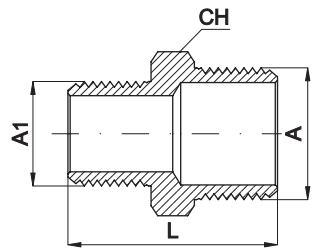

BSPT reducing nipple

Code	Item	A	A_1	L	CH
026091	AX027 14 18	1/4”	1/8”	27	14
026092	AX027 38 14	3/8”	1/4”	31	17
026093	AX027 12 14	1/2”	1/4”	34	22
026094	AX027 12 38	1/2”	3/8”	35	22
026095	AX027 34 38	3/4”	3/8”	38	27
026096	AX027 34 12	3/4”	1/2”	42	27
026097	AX027 01 12	1”	1/2”	45	36
026098	AX027 01 34	1”	3/4”	48	36
026099	AX027 41 34	1 1/4”	3/4”	49	42
026100	AX027 41 01	1 1/4”	1”	51	42
026101	AX027 21 01	1 1/2”	1”	53	50
026102	AX027 21 41	1 1/2”	1 1/4”	54	50
026103	AX027 02 41	2”	1 1/4”	58	60
026104	AX027 02 21	2”	1 1/2”	59	60
026105	AX027 22 21	2 1/2”	1 1/2”	67	77
026106	AX027 22 02	2 1/2”	2”	70	77
026107	AX027 03 22	3”	2 1/2”	78	90

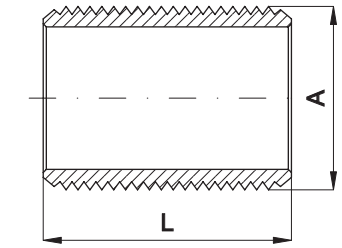

Threaded nipple

Code	Item	A	L
026001	AX028 18 18	1/8”	16
026002	AX028 14 14	1/4”	18
026003	AX028 38 38	3/8”	22
026004	AX028 12 12	1/2”	25
026005	AX028 34 34	3/4”	30
026006	AX028 01 01	1”	35
026007	AX028 41 41	1 1/4”	38
026008	AX028 21 21	1 1/2”	38
026009	AX028 02 02	2”	45
026010	AX028 22 22	2 1/2”	55
026011	AX028 03 03	3”	60

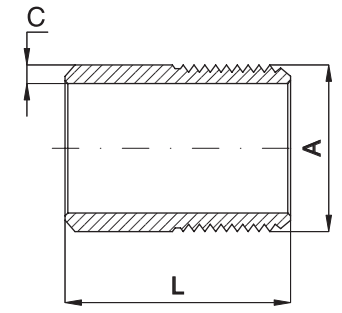

Solder fitting

Code	Item	A	L	C
026031	AX029 18 18	1/8”	20	2,24
026032	AX029 14 14	1/4”	22	2,24
026033	AX029 38 38	3/8”	25	2,31
026034	AX029 12 12	1/2”	28	2,90
026035	AX029 34 34	3/4”	35	2,90
026036	AX029 01 01	1”	35	3,38
026037	AX029 41 41	1 1/4”	45	3,56
026038	AX029 21 21	1 1/2”	45	3,68
026039	AX029 02 02	2”	50	3,91
026040	AX029 22 22	2 1/2”	55	6,30
026041	AX029 03 03	3”	65	4
026042	AX029 04 04	4”	75	4,5

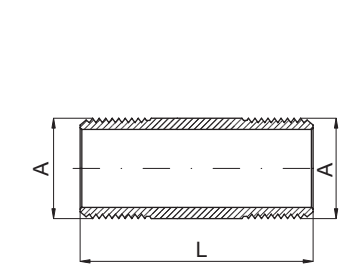

BSPT extended nipple

Code	Item	A	A	L
026061	AX030 18 18	1/8”	1/8”	30
026062	AX030 14 14	1/4”	1/4”	36
026063	AX030 38 38	3/8”	3/8”	42
026064	AX030 12 12	1/2”	1/2”	45
026065	AX030 34 34	3/4”	3/4”	53
026066	AX030 01 01	1”	1”	60
026067	AX030 41 41	1 1/4”	1 1/4”	66
026068	AX030 21 21	1 1/2”	1 1/2”	67
026069	AX030 02 02	2”	2”	75
026070	AX030 22 22	2 1/2”	2 1/2”	85
026071	AX030 03 03	3”	3”	90

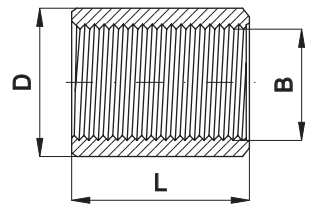

Female socket

Code	Item	B	L	D
026511	AX007 18 18	1/8”	20	14
026512	AX007 14 14	1/4”	22	17,2
026513	AX007 38 38	3/8”	25	21,3
026514	AX007 12 12	1/2”	30	26,7
026515	AX007 34 34	3/4”	35	33,4
026516	AX007 01 01	1”	37	40
026517	AX007 41 41	1 1/4”	42	48,3
026518	AX007 21 21	1 1/2”	42	57
026519	AX007 02 02	2”	46	71
026520	AX007 22 22	2 1/2”	65	90
026521	AX007 03 03	3”	70	100
026522	AX007 04 04	4”	70	120

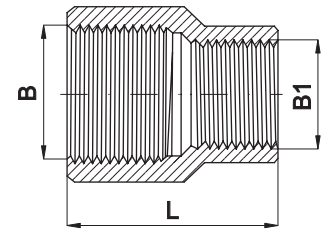

Female reducing socket

Code	Item	B	B_1	L
026541	AX031 14 18	1/4”	1/8”	27
026542	AX031 38 14	3/8”	1/4”	30
026543	AX031 12 14	1/2”	1/4”	36
026544	AX031 12 38	1/2”	3/8”	36
026545	AX031 34 38	3/4”	3/8”	39
026546	AX031 34 12	3/4”	1/2”	39
026547	AX031 01 12	1”	1/2”	45
026548	AX031 01 34	1”	3/4”	45
026549	AX031 41 34	1 1/4”	3/4”	50
026550	AX031 41 01	1 1/4”	1”	50
026551	AX031 21 01	1 1/2”	1”	55
026552	AX031 21 41	1 1/2”	1 1/4”	55
026553	AX031 02 41	2”	1 1/4”	65
026554	AX031 02 21	2”	1 1/2”	65
026555	AX031 22 21	2 1/2”	1 1/2”	74
026556	AX031 22 02	2 1/2”	2”	74
026557	AX031 03 02	3”	2”	80
026558	AX031 03 22	3”	2 1/2”	80

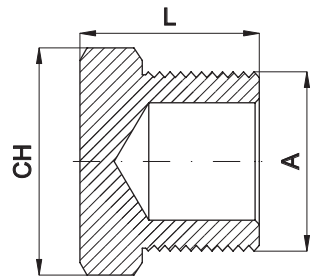

Male BSPT plug

Code	Item	A	L	CH
026191	AX016 18 18	1/8”	15	12
026192	AX016 14 14	1/4”	17	14
026193	AX016 38 38	3/8”	18	17
026194	AX016 12 12	1/2”	20	22
026195	AX016 34 34	3/4”	25	27
026196	AX016 01 01	1”	28	36
026197	AX016 41 41	1 1/4”	31	42
026198	AX016 21 21	1 1/2”	33	50
026199	AX016 02 02	2”	38	60
026200	AX016 22 22	2 1/2”	43	77
026201	AX016 03 03	3”	48	90

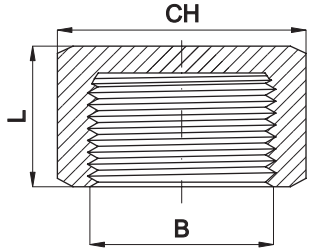

Female plug

Code	Item	B	L	CH
026671	AX010 18 18	1/8”	13	17
026672	AX010 14 14	1/4”	15	19
026673	AX010 38 38	3/8”	16	24
026674	AX010 12 12	1/2”	18	30
026675	AX010 34 34	3/4”	21	36
026676	AX010 01 01	1”	24	41
026677	AX010 41 41	1 1/4”	24	50
026678	AX010 21 21	1 1/2”	24	55
026679	AX010 02 02	2”	26	68
026680	AX010 22 22	2 1/2”	30	84
026681	AX010 03 03	3”	30	98

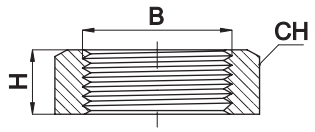

Nut

Code	Item	B	H	CH
026641	AX013 18 18	1/8”	6	19
026642	AX013 14 14	1/4”	6	22
026643	AX013 38 38	3/8”	7	27
026644	AX013 12 12	1/2”	8	32
026645	AX013 34 34	3/4”	9	36
026646	AX013 01 01	1”	10	46
026647	AX013 41 41	1 1/4”	11	55
026648	AX013 21 21	1 1/2”	12	60
026649	AX013 02 02	2”	13	75
026650	AX013 22 22	2 1/2”	16	95
026651	AX013 03 03	3”	19	105

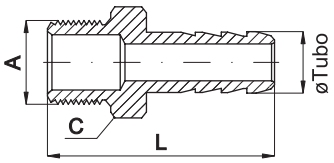

BSPT - hose adapter

Code	Item	ø Tubo	A	L	CH
026711	AX015 07 18	7	1/8”	35	12
026712	AX015 09 14	9	1/4”	38	14
026713	AX015 11 38	11	3/8”	44	19
026714	AX015 15 12	15	1/2”	48	22
026715	AX015 21 34	21	3/4”	58	27
026716	AX015 27 01	27	1”	61	36
026717	AX015 34 41	34	1 1/4”	70	46
026718	AX015 40 21	40	1 1/2”	73	50
026719	AX015 52 02	52	2”	81	60

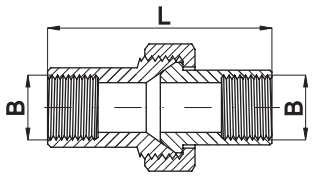

BSP female union

Code	Item	B	B	L
026741	AX032 18 18	1/8”	1/8”	30
026742	AX032 14 14	1/4”	1/4”	34
026743	AX032 38 38	3/8”	3/8”	38
026744	AX032 12 12	1/2”	1/2”	41
026745	AX032 34 34	3/4”	3/4”	48
026746	AX032 01 01	1”	1”	52
026747	AX032 41 41	1 1/4”	1 1/4”	54
026748	AX032 21 21	1 1/2”	1 1/2”	59
026749	AX032 02 02	2”	2”	67
026750	AX032 22 22	2 1/2”	2 1/2”	78
026751	AX032 03 03	3”	3”	94

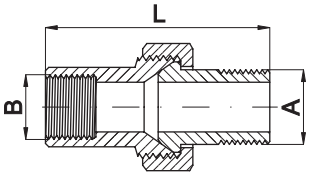

M-F BSP union

Code	Item	A	B	L
026801	AX033 18 18	1/8”	1/8”	42
026802	AX033 14 14	1/4”	1/4”	42
026803	AX033 38 38	3/8”	3/8”	49
026804	AX033 12 12	1/2”	1/2”	56
026805	AX033 34 34	3/4”	3/4”	63
026806	AX033 01 01	1”	1”	69
026807	AX033 41 41	1 1/4”	1 1/4”	74
026808	AX033 21 21	1 1/2”	1 1/2”	84
026809	AX033 02 02	2”	2”	102

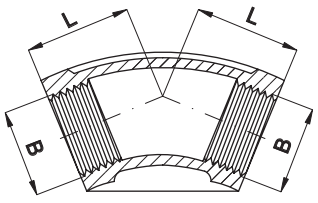

BSP 45°, female elbow

Code	Item	B	B	L
026311	AX034 18 18	1/8”	1/8”	17
026312	AX034 14 14	1/4”	1/4”	19
026313	AX034 38 38	3/8”	3/8”	20
026314	AX034 12 12	1/2”	1/2”	22
026315	AX034 34 34	3/4”	3/4”	25
026316	AX034 01 01	1”	1”	28
026317	AX034 41 41	1 1/4”	1 1/4”	33
026318	AX034 21 21	1 1/2”	1 1/2”	36
026319	AX034 02 02	2”	2”	43
026320	AX034 22 22	2 1/2”	2 1/2”	50
026321	AX034 03 03	3”	3”	56

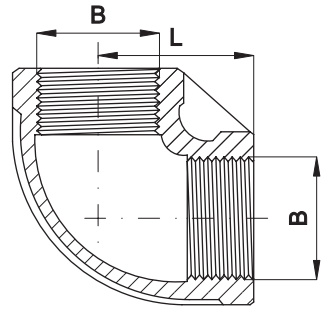

F-F elbow

Code	Item	B	B	L
026291	AX021 18 18	1/8”	1/8”	19
026292	AX021 14 14	1/4”	1/4”	21
026293	AX021 38 38	3/8”	3/8”	25
026294	AX021 12 12	1/2”	1/2”	28
026295	AX021 34 34	3/4”	3/4”	33
026296	AX021 01 01	1”	1”	38
026297	AX021 41 41	1 1/4”	1 1/4”	45
026298	AX021 21 21	1 1/2”	1 1/2”	50
026299	AX021 02 02	2”	2”	58
026300	AX021 22 22	2 1/2”	2 1/2”	75
026301	AX021 03 03	3”	3”	85

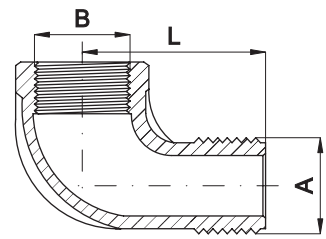

M-F elbow

Code	Item	A	B	L
026391	AX022 18 18	1/8”	1/8”	20
026392	AX022 14 14	1/4”	1/4”	20
026393	AX022 38 38	3/8”	3/8”	24
026394	AX022 12 12	1/2”	1/2”	28
026395	AX022 34 34	3/4”	3/4”	33
026396	AX022 01 01	1”	1”	38
026397	AX022 41 41	1 1/4”	1 1/4”	-
026398	AX022 21 21	1 1/2”	1 1/2”	-
026399	AX022 02 02	2”	2”	-
026400	AX022 22 22	2 1/2”	2 1/2”	-
026401	AX022 03 03	3”	3”	-

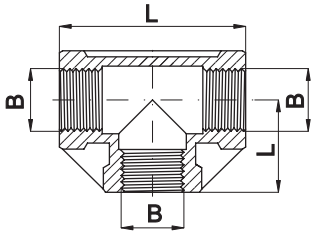

F-F-F tee

Code	Item	B	B	B	L
026421	AX023 18 18	1/8”	1/8”	1/8”	19
026422	AX023 14 14	1/4”	1/4”	1/4”	21
026423	AX023 38 38	3/8”	3/8”	3/8”	25
026424	AX023 12 12	1/2”	1/2”	1/2”	28
026425	AX023 34 34	3/4”	3/4”	3/4”	33
026426	AX023 01 01	1”	1”	1”	38
026427	AX023 41 41	1 1/4”	1 1/4”	1 1/4”	45
026428	AX023 21 21	1 1/2”	1 1/2”	1 1/2”	50
026429	AX023 02 02	2”	2”	2”	58
026430	AX023 22 22	2 1/2”	2 1/2”	2 1/2”	75
026431	AX023 03 03	3”	3”	3”	85

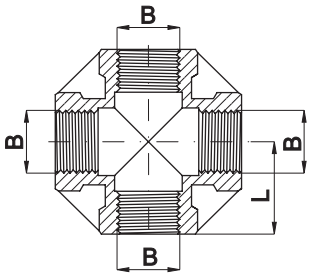

F-F-F-F +

Code	Item	B	B	B	B	L
026481	AX026 18 18	1/8”	1/8”	1/8”	1/8”	20
026482	AX026 14 14	1/4”	1/4”	1/4”	1/4”	24
026483	AX026 38 38	3/8”	3/8”	3/8”	3/8”	24
026484	AX026 12 12	1/2”	1/2”	1/2”	1/2”	28
026485	AX026 34 34	3/4”	3/4”	3/4”	3/4”	33
026486	AX026 01 01	1”	1”	1”	1”	38
026487	AX026 41 41	1 1/4”	1 1/4”	1 1/4”	1 1/4”	45
026488	AX026 21 21	1 1/2”	1 1/2”	1 1/2”	1 1/2”	49
026489	AX026 02 02	2”	2”	2”	2”	57

Stainless Steel quick-lock couplings

Series GXA, from DN 6 to DN 25

Version	Code	Item
Coupling 1/4” F, DN 6	570836	GXA1014F
Plug 1/4” F, DN 6	570837	GXA2014F
Coupling 3/8” F, DN 9	570838	GXA1038F
Plug 3/8” F, DN 9	570839	GXA2038F
Coupling 1/2” F, DN 13	570840	GXA1012F
Plug 1/2” F, DN 13	570841	GXA2012F
Coupling 3/4” F, DN 19	570842	GXA1034F
Plug 3/4” F, DN 19	570843	GXA2034F
Coupling 1” F, DN 25	570844	GXA1100F
Plug 1” F, DN 25	570845	GXA2100F

STAINLESS STEEL



Series of stainless steel AISI 316 quick-lock couplings, double shut off.
Conforming to ISO 7241-1 “A” suitable for use in aggressive environments like the chemical field and the food industry.
The connection tightness between the coupling and the plug is guaranteed by a series of spheres and this allows a longer life time even when the connections and the disconnections are frequent.
For standard items, codes and dimensions see tables from page 5.170.2.

EX

On request, they can be supplied according Directive 94/9/EC - **ATEX**
CE Ex **II 3 GDc T5**

Technical data			
Fluid	Compressed air, gas, acids, fluids		
Pressure range	1/4” = 300 bar	3/8”-1/2”-3/4” = 250 bar	1” = 200 bar
Temperature range	-20 °C ÷ +150 °C		
Parallel threads	UNI - ISO 228		
Materials	Coupler body and internal parts, all in stainless steel AISI 316 Seals: FKM		

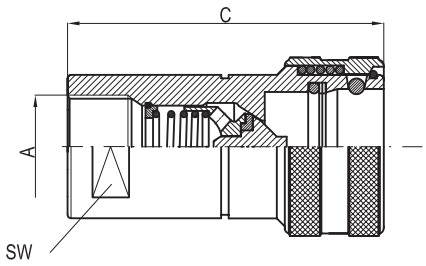

Coupling GXA1

Code	Item	A	C	SW
570836	GXA1014F	1/4”	-	-
570838	GXA1038F	3/8”	-	-
570840	GXA1012F	1/2”	-	-
570842	GXA1034F	3/4”	-	-
570844	GXA1100F	1”	-	-

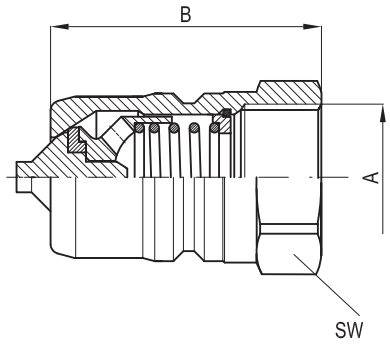

Plug GXA2

Code	Item	A	B	SW
570837	GXA2014F	1/4”	-	-
570839	GXA2038F	3/8”	-	-
570841	GXA2012F	1/2”	-	-
570843	GXA2034F	3/4”	-	-
570845	GXA2100F	1”	-	-

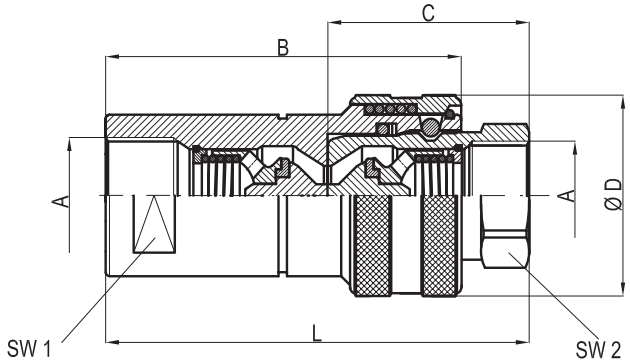

Group coupling-plug

A	B	C	D	L	SW_1	SW_2
1/4”	50	34	26	70	19	19
3/8”	57	40	30	80	22	22
1/2”	70	46	38	95	27	27
3/4”	81	53,5	48	108	34	32
1”	96	63	54	126	38	41

Stainless Steel quick-lock couplings

Series GXF, from DN 6 to DN 30

Version	Code	Item
Coupling 1/4” F, DN 6	570846	GXF1014F
Plug 1/4” F, DN 6	570847	GXF2014F
Coupling 3/8” F, DN 9	570848	GXF1038F
Plug 3/8” F, DN 9	570849	GXF2038F
Coupling 1/2” F, DN 13	570850	GXF1012F
Plug 1/2” F, DN 13	570851	GXF2012F
Coupling 3/4” F, DN 19	570852	GXF1034F
Plug 3/4” F, DN 19	570853	GXF2034F
Coupling 1” F, DN 25	570854	GXF1100F
Plug 1” F, DN 25	570855	GXF2100F
Coupling 1-1/2” F, DN 30	570856	GXF1114F
Plug 1-1/2” F, DN 30	570857	GXF2114F





Series of stainless steel AISI 316 quick-lock couplings, “flat face” double shut off without exit of fluid at the moment of disconnection.
Conforming to ISO 16028 for use in aggressive environments like the chemical field and the food industry and on those use where it is important that there is not exit of fluid.
The connection tightness between the coupling and the plug is guaranteed by a series of spheres and this allows a longer life time even when the connections and the disconnections are frequent.
For standard items, codes and dimensions see tables from page 5.172.2.

EX

On request, they can be supplied according Directive 94/9/EC - **ATEX**
CE Ex **II 3 GDc T5**

Technical data					
Fluid	Compressed air, gas, acids, fluids				
Pressure range	1/4” = 300 bar	3/8”-1/2” = 250 bar	3/4” = 200 bar	1” = 150 bar	11/4” = 100 bar
Temperature range	-20 °C ÷ +150 °C				
Parallel threads	UNI - ISO 228				
Materials	Coupler body and internal parts, all in stainless steel AISI 316 Seals: FKM				

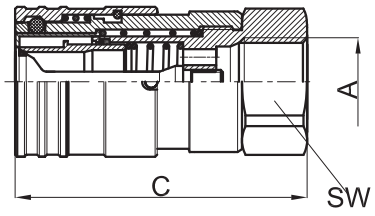

Coupling GXF1

Code	Item	A	C	SW
570846	GXF1014F	1/4”	48	22
570848	GXF1038F	3/8”	68	27
570850	GXF1012F	1/2”	74	32
570852	GXF1034F	3/4”	79	36
570854	GXF1100F	1”	93	45
570856	GXF1114F	1 1/4”	106	55

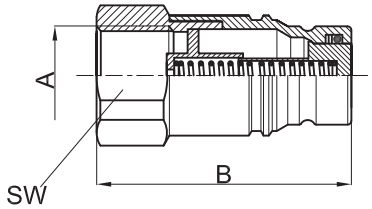

Plug GXF2

Code	Item	A	B	SW
570847	GXF2014F	1/4”	48	22
570849	GXF2038F	3/8”	67	27
570851	GXF2012F	1/2”	68	32
570853	GXF2034F	3/4”	70	36
570855	GXF2100F	1”	82	45
570857	GXF2114F	1 1/4”	90	55

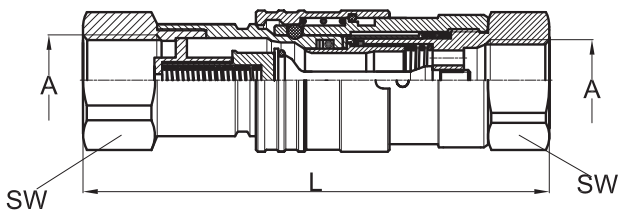

Group coupling-plug

A	L	SW
1/4”	86	22
3/8”	118	27
1/2”	125	32
3/4”	130	36
1”	153	45
1 1/4”	172,5	55

Stainless Steel swivel joints, in line and 90°

Series GGLX - GGAX, from DN 6 to DN 50

Version	Code	Item
In line 1/4” MF, DN 6	570858	GGLX014
In line 3/8” MF, DN 9	570859	GGLX038
In line 1/2” MF, DN 13	570860	GGLX012
In line 3/4” MF, DN 19	570861	GGLX034
In line 1” MF, DN 25	570862	GGLX100
In line 1 1/4” MF, DN 30	570863	GGLX114
In line 1 1/2” MF, DN 40	570864	GGLX112
In line 2” MF, DN 50	570865	GGLX200
90° 1/4” MF, DN 6	570866	GGAX014
90° 3/8” MF, DN 9	570867	GGAX038
90° 1/2” MF, DN 13	570868	GGAX012
90° 3/4” MF, DN 19	570869	GGAX034
90° 1” MF, DN 25	570870	GGAX100
90° 1 1/4” MF, DN 30	570871	GGAX114
90° 1 1/2” MF, DN 40	570872	GGAX112
90° 2” MF, DN 50	570873	GGAX200



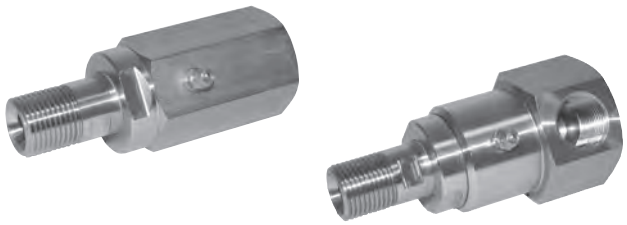

Series of stainless steel swivel joints in line and 90°.
They are used to connect two rotating elements, avoiding twists.
For standard items, codes and dimensions see tables from page 5.175.2.

EX

On request, they can be supplied according Directive 94/9/EC - **ATEX**
CE Ex **II 3 GDc T5**

Technical data					
Fluid	Compressed air, gas, acids, fluids				
Pressure range	GGLX: 1/4”- 3/8” = 300 bar	1/2” = 300 bar	3/4”-1” = 250 bar	1 1/4” = 180 bar	1 1/2”-2” = 150 bar
	GGAX: 1/4” = 350 bar	3/8-1/2” = 300 bar	3/4”-1” = 250 bar	1 1/4” = 180 bar	1 1/2”-2” = 150 bar
Temperature range	-20 °C ÷ +150 °C				
Parallel threads	UNI - ISO 228				
Max speed of rotation	10 turns / minute				
Materials	Coupler body and internal parts, all in stainless steel AISI 316 Seals: FKM				

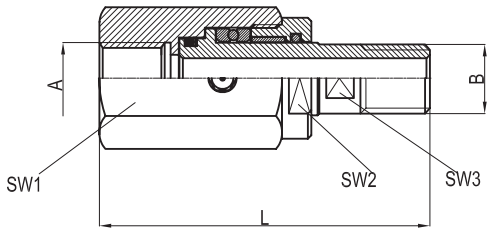

In line swivel joint GGLX

Code	Item	A	B	L	SW_1	SW_2	SW_3
570858	GGLX014	1/4”	1/4”	75	27	24	11
570859	GGLX038	3/8”	3/8”	88	34	30	14
570860	GGLX012	1/2”	1/2”	101	36	32	18
570861	GGLX034	3/4”	3/4”	110	46	40	24
570862	GGLX100	1”	1”	124	55	50	30
570863	GGLX114	1 1/4”	1 1/4”	129	60	55	38
570864	GGLX112	1 1/2”	1 1/2”	138	75	69	41
570865	GGLX200	2”	2”	149	85	80	55

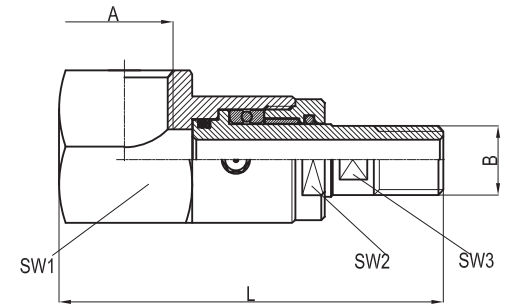

90° swivel joint GGAX 1/4” ÷ 1”

Code	Item	A	B	L	SW_1	SW_2	SW_3
570866	GGAX014	1/4”	1/4”	78	32	21	11
570867	GGAX038	3/8”	3/8”	98	36	27	14
570868	GGAX012	1/2”	1/2”	106	46	32	18
570869	GGAX034	3/4”	3/4”	118	50	37	24
570870	GGAX100	1”	1”	142	60	46	30

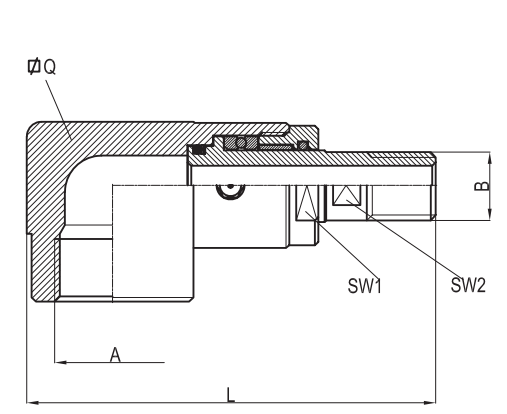

90° swivel joint GGAX 1 1/4” ÷ 2”

Code	Item	A	B	L	Q	SW_1	SW_2
570871	GGAX114	1 1/4”	1 1/4”	155	60	55	38
570872	GGAX112	1 1/2”	1 1/2”	170	75	70	41
570873	GGAX200	2”	2”	190	85	80	55

Air-reservoirs

According to EC Directive 97/23

Version	Code	Item
5 lt 4 connections	050612	5SBCX4
12 lt 4 connections	050613	12SBCX4
24 lt 4 connections	050614	24SBCX4



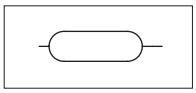



Keep to the use and maintenance manual supplied together with each reservoir.

On request, they can be supplied according Directive 94/9/EC - **ATEX**
II 2 GDc T5

Series of stainless steel air-reservoirs for compressed air built according to EC directive 97/23 about equipment under pressure.
Every air-reservoir is supplied with Certificate of Conformity and manual instructions.
For standard items, codes and dimensions see tables from page 5.180.2.
On request, safety valves in stainless steel can be supplied.
For pressure-gauges with stainless steel cover see page xxx

Technical data	
Fluid	Compressed air
Pressure range	11 bar max
Hydrostatic test pressure	16,5 bar
Temperature range	-40 °C ÷ +50 °C
Threads	Cilindriche UNI - ISO 228/1
Materials	Stainless steeel AISI 304, polished

type: 5**SBCX4**

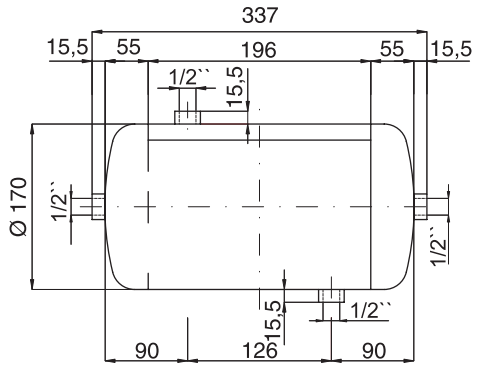

Code	Item	N° connections
050612	5SBCX4	4

type: **12SBCX4**

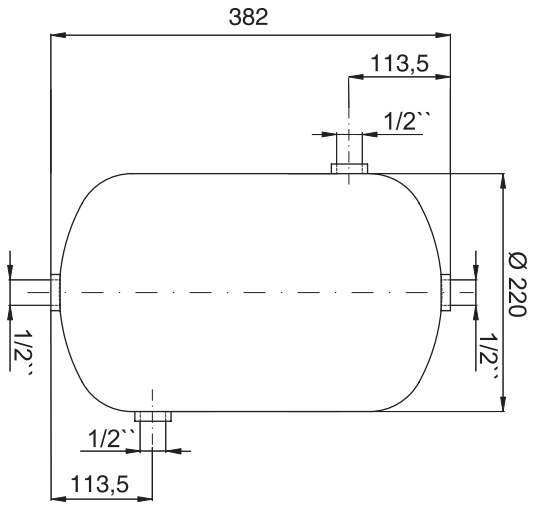

Code	Item	N° connections
050613	12SBCX4	4

type: **24SBCX4**

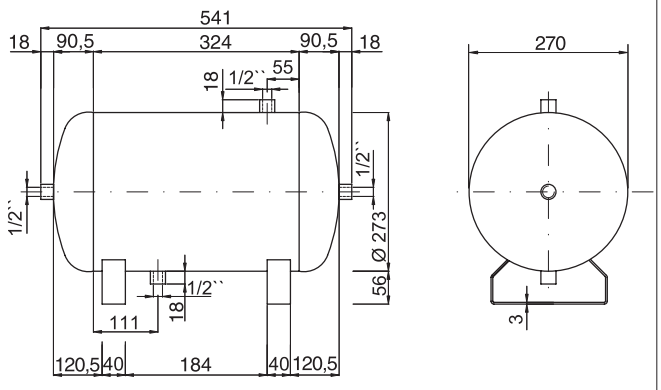

Code	Item	N° connections
050614	24SBCX4	4

5

Stainless Steel flow controls

In line for cylinders

Version	Symbol	Code	Item
Unidirectional in line 1/8” female-female thread		030155	VX521818
Unidirectional in line 1/4” female-female thread		030156	VX521414
Bi-directional in line 1/8” female-female thread		030157	VX531818
Bi-directional in line 1/4” female-female thread		030158	VX531414
Screwdriver adjustment for cylinder, 1/8”		024035	VX150018C
Screwdriver adjustment for cylinder, 1/4”		024036	VX150014C
Bi-directional screwdriver adjustment, 1/8”		024037	VX150018B
Bi-directional screwdriver adjustment, 1/4”		024038	VX150014B
Screwdriver adjustment for valve, 1/8”		024039	VX150018V
Screwdriver adjustment for valve, 1/4”		024040	VX150014V

For the coupling of the screw adjustment type VX with stainless steel single banjo, see banjo type RX35 at page 5.150.5



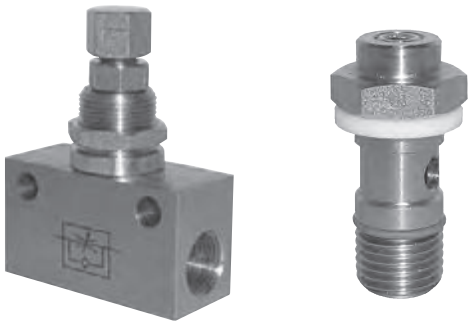

Series of stainless steel flow controls available either for in line applications and for direct connection to cylinders to control the translation velocity.
The in line regulators are available for control in one way (unidirectional) or in both ways (bi-directional).
The regulators for cylinders can be unidirectional with outlet adjustment from the cylinder (C) or with inlet adjustment to the cylinder (V), and in both sides (B).
For standard items, codes and dimensions see tables at page 5.185.2.

Flow diagrams

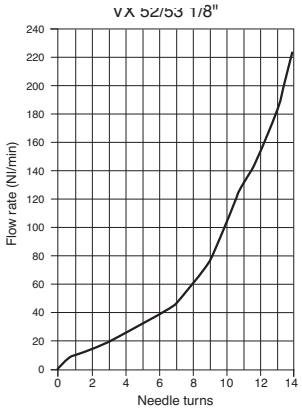

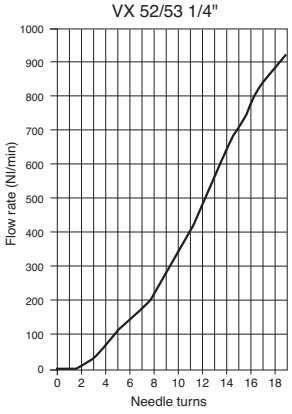

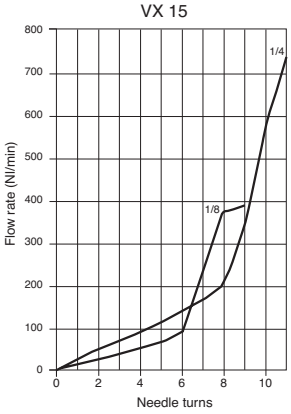

Technical data			
	VX52	VX53	VX15
Fluid	Compressed filtered air with or without lubrication		
Pressure range	0,5 ÷ 10 bar		
Temperature range	-20 °C ÷ 150 °C		
Threads	UNI - ISO 228		
TConnection tubes	According to used fitting		Nylon, poliurethane and Rilsan calibrated
Tolleranze tubi	_		± 0,05 mm
Materials	Body: Stainless steel AISI 316 L Adjustment group: Stainless steel AISI 316 L Seals: FKM		body: Stainless steelAISI 316 L Seals: FKM Washer: PTFE

GENERAL INDEX
STAINLES STEEL COMPONENTS INDEX

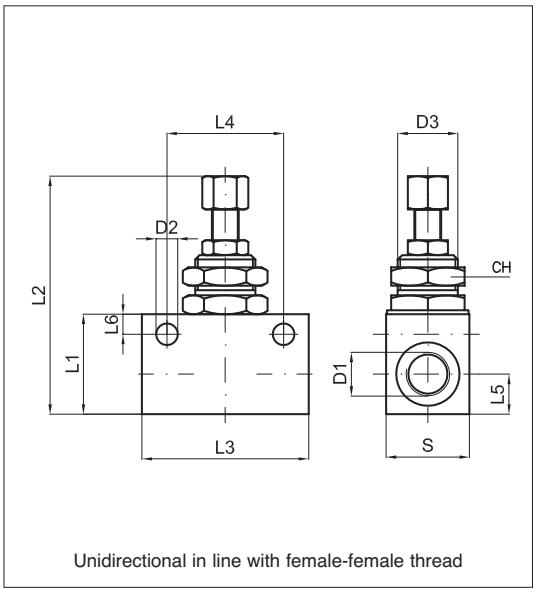

Unidirectional in line with female-female thread

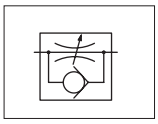

Code	Item	D_1	D_2	D_3	L_1	L_2 max	L_3	L_4	L_5	S	CH	Weight gr
030155	VX52 18 18	1/8”	4,5	12x0,75	21	56	34	24	8	16	15	50
030156	VX52 14 14	1/4”	6,5	18x1,5	30	75	50	35	12	25	22	160

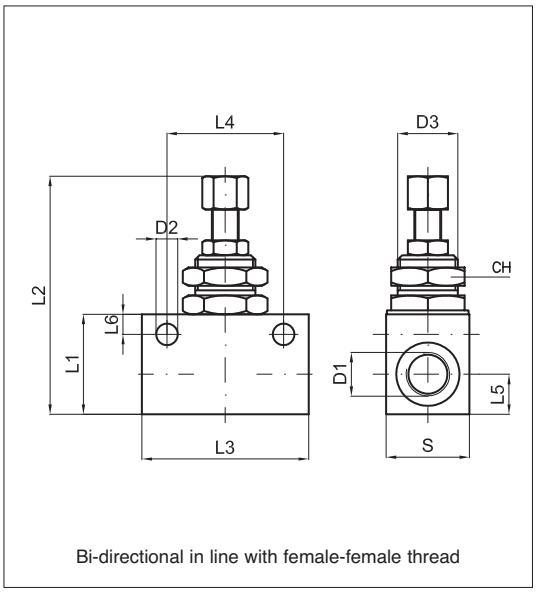

Bi-directional in line with female-female thread

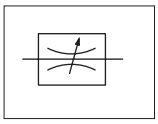

Code	Item	D_1	D_2	D_3	L_1	L_2 max	L_3	L_4	L_5	S	CH	Weight gr
030157	VX53 18 18	1/8”	4,5	12x0,75	21	56	34	24	8	16	15	50
030158	VX53 14 14	1/4”	6,5	18x1,5	30	75	50	35	12	25	22	160

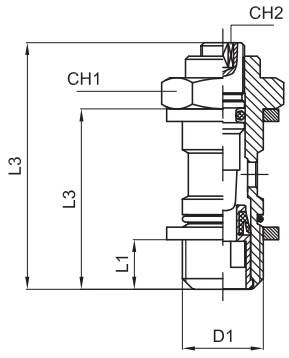

Exagonal screw adjustment

For cylinder

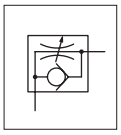

Code	Item	D_1	L_1	L_2	L_3 max	CH_1	CH_2	Weight gr
024035	VX15 00 18C	1/8”	5,5	25	36	14	2,5	16
024036	VX15 00 14C	1/4”	6,5	27,5	42	17	3	30

Bi directional

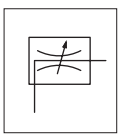

Code	Item	D_1	L_1	L_2	L_3 max	CH_1	CH_2	Weight gr
024037	VX15 00 18B	1/8”	5,5	25	36	14	2,5	16
024038	VX15 00 14B	1/4”	6,5	27,5	42	17	3	30

For valve

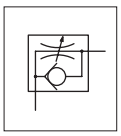

Code	Item	D_1	L_1	L_2	L_3 max	CH_1	CH_2	Weight gr
024039	VX15 00 18V	1/8”	5,5	25	36	14	2,5	16
024040	VX15 00 14V	1/4”	6,5	27,5	42	17	3	30

Stainless Steel silencers and silenced exhaust restrictors

Version	Symbol	Type
Silencer with mesh		AFEX
Conical silencer with hexagonal nut		AEX
Silenced exhaust restrictor with screwdriver slot	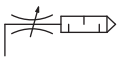	AVRX
Silenced exhaust restrictor with manual adjustment		AVEX





Series of stainless steel silencers and silenced exhaust restrictors to be used on the exhausts of valves to reduce the noise.
The silenced exhaust restrictors, furthermore, adjust the exhaust speed and therefore the translation velocity of the cylinders.
For standard items, codes and dimensions see tables from page 5.190.2.

Technical data	
Fluid	Compressed air
Pressure range	0 ÷ 10 bar
Temperature range	-40 °C ÷ + 150°C
Parallel threads	UNI - ISO 228
Materials	Stainless steel AISI 304

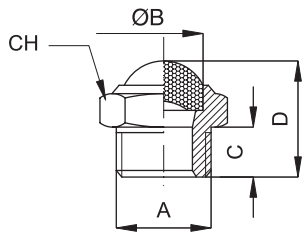

Silencer with mesh

Code	Item	A	B	CH	C	D
010327	AFEXM5	5MA	6,5	8	3,8	8
010321	AFEX18	1/8”	11	13	6	16
010322	AFEX14	1/4”	14	16	8	19
010345	AFEX38	3/8”	17	19	9	21
010346	AFEX12	1/2”	22	24	10	23
010330	AFEX34	3/4”	28	30	10	27
010329	AFEX01	1”	34	36	15	29

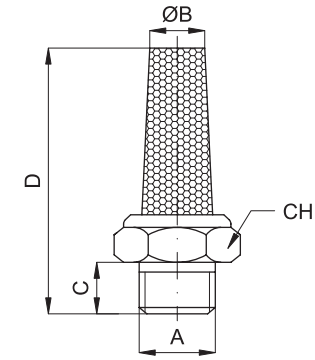

Conical silencer with exagonal nut

Code	Item	A	B	CH	C	D
010351	AEX18	1/8”	11,2	13	7	27,4
010352	AEX14	1/4”	14	16	11	35
011033	AEX38	3/8”	17,5	19	13,3	47,5
010353	AEX12	1/2”	22	24	15	53,5
010354	AEX34	3/4”				
010355	AEX01	1”				

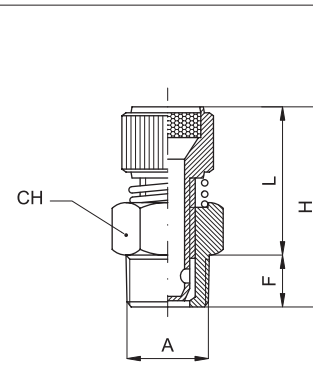

Silenced exhaust restrictors
with manual adjustment

Code	Item	A	CH	F	L		H	
					min	max	min	max
023512	AVEX18	1/8”	13	6	20	22	26	28
023513	AVEX14	1/4”	15	8	22	24	30	32
023314	AVEX38	3/8”	18	10	25	28	35	38
023515	AVEX12	1/2”	22	11	26	29	36	39
023516	AVEX34	3/4”	30	12	32	37	45	50
023517	AVEX01	1”	36	12	32	37	45	50

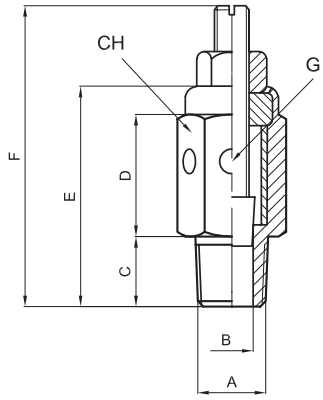

Silenced exhaust restrictors
with screwdriver nut

Code	Item	A	B	C	D	E	F	G	H
023518	AVRX18	1/8”	4	8,5	14	23	33	3	13
023519	AVRX14	1/4”	5,2	11	16	31	40	5	14
023520	AVRX38	3/8”	7	12	18	33	43	5	17

ABS...ARD ISO6431	1.75.10
ABS...ARD ISO6432	1.75.1
ABS...CRD ISO6431	1.75.10
ABS...CRD ISO6432	1.75.1
AMA	1.5.1
AMT	1.5.1 - 1.8.1
AN...ALCN	1.99.1
AS...ALCN	1.99.1
AS...ALIS	1.97.1
AS1	1.120.1
AFM	1.120.1
AFR	1.120.1
ARC	1.50.20
ARP	1.50.30
ASC	1.110.2
ASS..AQIS	1.98.1
ASV	1.110.1
ASV...ALIS	1.97.1
ASV...AQIS	1.98.1
BD	1.20.10
BDM	1.20.10
BDMN	1.20.10
BS	1.20.1
BSM	1.20.1
C..S	1.26.30
CAV	1.110.3
CD	1.17.10
CDN	1.17.10
CF ISO6432	1.95.1
CF..AQM	1.11.3
CF...ALCN	1.99.1
CF...ALIS	1.97.1
CF...ALUN	1.100.1
CF...AQIS	1.98.1
CF...AQUN	1.100.50
CFA...AQIS	1.98.1
CFS...ALIS	1.97.1
CFS...AQIS	1.98.1
CL..S	1.26.30
CM...ALB	1.20.20
CM...ALIS	1.97.1
CM...ALUN	1.100.1
CM...AQIS	1.98.1
CM...AQUN	1.100.50
CMS...ALIS	1.97.1
CMS...AQIS	1.98.1
CR	1.40.1
CRF	1.40.1
CRR	1.40.1
CRRF	1.40.1
CS	1.17.1
CT...AQCN	1.99.50
CT...AQIS	1.98.1
CTA...AQIS	1.98.1
CTS...AQCN	1.99.50
CTS...AQIS	1.98.1
CX	1.14.1
DR	1.105.1
DRF	1.105.1
F ISO6432	1.95.1
F10	1.120.1
F12	1.120.1
F16	1.120.1
F20	1.120.1
F25	1.120.1
F32	1.120.1
F40	1.120.1
F50	1.120.1
F63	1.120.1
F8	1.120.1
FE	1.85.20
FFCN	1.85.10
FFDIN	1.85.5
FFISO	1.85.1
FL...ALUN	1.100.1
FL...AQCN	1.99.50
FL...AQIS	1.98.1
FL...AQUN	1.100.50
FLV...AQIS	1.98.1
FMCN	1.85.10
FP...	1.50.10.
GB...	1.90.10
GEDB	1.23.1
GEDS	1.23.1
GH..AQM	1.11.3
KA...	1.50.15
MCF	1.55.1
MCN	1.55.1
MD	1.2.10
MDM	1.2.10
MDMA	1.2.10
MS	1.2.1
MSM	1.2.1
N....AQB	1.20.20
P	1.50.1
P ISO6432	1.95.1
P..AQM	1.11.4
P..S	1.26.28
P...ALB	1.20.21
P...ALCN	1.99.1
P...ALIS	1.97.1
P1	1.50.1
P1R	1.50.1
PAB	1.80.1
PAC	1.80.11
PB...AQCN	1.99.50
PB...AQIS	1.98.1
PB...AQUN	1.100.50
PL...ALCN	1.99.1
PF	1.80.60
PM	1.80.60
PP...	1.50.10
PPB	1.80.20
PPC	1.80.30
PPD	1.80.40
PPE	1.80.50
PR	1.50.1
RBI..	1.90.20
RBL..	1.90.30
RED	1.11.1
REDM	1.11.1
RF..SE	1.90.1
S1	1.26.1
S2	1.26.1
S3	1.26.10
S4	1.26.20
S5	1.26.10
S6	1.26.10
SA090...	1.50.15
SA180...	1.50.15
SA270...	1.50.15
SCSG...	1.70.40
SEC..AQM	1.11.4
SEC...AQCN	1.99.50
SEC...AQIS	1.98.1
SEC...ARAQIS	1.98.1
SI..S	1.26.28
SID..S	1.26.35
ST...AQIS	1.98.1
STD..S	1.26.35
UGLB ISO6431	1.70.20
UGLB ISO6432	1.70.1
UGPB ISO6431	1.70.20
UGPB ISO6432	1.70.1
UGPS ISO6431	1.70.20
UGPS ISO6432	1.70.1
VBIC	1.101.1
VBTR	1.101.1
VBU	1.101.1
VBVI	1.101.1

A05207...	2.210.1
A12209...	2.210.20
A18209...	2.210.30
A19207...	2.210.10
A1B1	2.65.1
A1B2	2.85.1
A1C1	2.65.1
A1C2	2.85.1
A1E1	2.50.1 - 2.53.1
A1E2	2.70.1 - 2.73.1
A1E4	2.90.1 - 2.93.1
A1K1	2.50.1 - 2.53.1
A1K2	2.70.1 - 2.73.1
A1K4	2.90.1 - 2.93.1
A1MA1	2.230.1 - 2.233.1
A1MA2	2.236.1 - 2.239.1
A1NE	2.88.1
A1P1	2.56.1 - 2.59.1
A1P2	2.76.1 - 2.79.1
A1P4	2.96.1 - 2.99.1
A1T1	2.65.1
A1T2	2.85.1
ABAS05	2.2.2
ABAS05S	2.2.2
ABAS05T	2.2.2
AC104.....	2.270.1
AC118....	2.275.1
AC204.....	2.270.1
AC218....	2.275.1
AC304.....	2.270.1
AC318....	2.275.1
ACP04....	2.250.1
ACP05....	2.250.1
ACP14....	2.250.10
AE05A.....	2.2.1
AE05C.....	2.2.1
AE1518.....	2.10.1
AEC1520	2.170.1
AEF1520	2.170.1
AEN22...	2.165.1
AEP22...	2.165.1
AEV22...	2.165.1
AM04.....	2.255.1
AP11.	2.265.1
AP1518....	2.16.1
AP1814....	2.36.1
AP21R	2.265.1
AP22R	2.265.1
AP32N	2.265.1
AP33N	2.265.1
AP42C	2.265.1
AP53N	2.265.1
APC1520	2.170.1
APF1520	2.170.1
AR...DE	2.430.10
AR...SE	2.430.1
ASA12.....	2.200.1
ASA18.....	2.200.1
ASA19.....	2.200.10
ASA2.....	2.200.10
ASA32.....	2.200.20
ASA33.....	2.200.20
FF	2.370.1
ISO1E	2.110.1
ISO1EL	2.111.1
ISO1K	2.110.1
ISO1KL	2.111.1
ISO1P	2.113.1
ISO2E	2.130.1
ISO2K	2.130.1
ISO2P	2.133.1
MSFF	2.330.1
MSMF	2.330.1
MVSFF	2.310.1
MVSMF	2.310.1
PF1518	2.20.1
PF1518	2.40.1
SB15..	2.20.1
SB1518	2.20.1
SB1518	2.40.1
SB18..	2.40.1
SBA1	2.120.1
SBA2..	2.137.1
V26....	2.300.1
VS	2.390.1
VSI....DE	2.431.11
VSI....SE	2.431.10
VSL...FF	2.340.1
VSO....DE	2.431.2
VSO....SE	2.431.1
VSR	2.360.1
VSRM	2.360.1

Airline equipment and pressure gauges

A01F	3.2.30
A01FRR	3.2.30
A01FRRL	3.2.30
A01L	3.2.30
A01R	3.2.30
A12F	3.2.20
A12FRR	3.2.20
A12FRRL	3.2.20
A12L	3.2.20
A12R	3.2.20
A14F	3.2.1
A14FRR	3.2.1
A14FRRL	3.2.1
A14L	3.2.1
A14R	3.2.1
A38F	3.2.10
A38FRR	3.2.10
A38FRRL	3.2.10
A38L	3.2.10
A38R	3.2.10
AC400-1/4RR	3.10.1
AC400-1/8RR	3.10.1
ASA	3.5.1
CA../25	3.5.1
CA../5	3.5.1
D	3.5.1
DF	3.5.1
DSL	3.5.1
DST	3.5.1
DT	3.5.1
M....	3.50.1
MF....	3.50.1
MP....	3.50.1
MR....	3.50.1
OL	3.5.1
ORT	3.5.1
SFL	3.5.1
SL	3.5.1
SR	3.5.1
ST	3.5.1
TM..F	3.5.1
TM..L	3.5.1
TP..L	3.5.1
TP..F	3.5.1
VMS	3.5.1

GENERAL INDEX

20KA.....	4.45.1
20SF.....	4.45.1
21KA.....	4.45.11
21SF.....	4.45.11
26KA.....	4.45.21
26SF.....	4.45.21
A.....	4.35.1
A113....	4.55.1
A213....	4.55.1
AC..	4.85.11
ACQ..	4.85.11
AE..	4.85.11
AEA..	4.85.11
AEB..	4.85.11
AEP..	4.85.11
AF..	4.85.11
AFE..	4.85.11
AH13	4.65.31
AK13	4.65.31
AM13	4.65.31
AN13	4.65.31
AP..	4.85.11
AR..	4.80.81
AR12	4.65.31
ASE..	4.80.81
ASN....	4.80.81
ASP..	4.80.81
ASPM..	4.80.81
AT..	4.85.11
AT12	4.65.31
ATT..	4.85.11
AVC..	4.80.50
AVE..	4.80.50
AVL..	4.80.50
AVS..	4.80.50
AVT..	4.80.50
C.....	4.20.1
C113....	4.55.1
C213....	4.55.1
CP..	4.65.11
CPFW..	4.65.11
CSC1	4.90.1
FS.....	4.65.11
FW.....	4.65.11
LPTM..	4.65.21
LPTP	4.65.21
M..	4.85.21
O.....	4.25.1
PR18.	4.83.31
PRSB	4.70.11
PTM..	4.65.21
PTP..	4.65.21
R.....	4.2.1
R...../150	4.3.1
RA	4.65.41
RB	4.65.41
RF	4.65.41
RN	4.65.41
RP.....	4.10.1
RR	4.65.41
RR..	4.60.1
RT.....	4.5.1
RX2	4.60.1
RX3	4.60.1
RX4	4.60.1
RX8	4.60.1
RY.	4.60.1
RZ.	4.60.1
SBCV	4.70.1
SD12	4.65.31
SPD....	4.85.1
SPF....	4.85.1
SPU.....	4.65.1
SR.....	4.65.1
STSB	4.70.11
TN.....	4.65.1
TP.....	4.65.1
TPU.....	4.65.1
TR.....	4.65.1
TSC....	4.65.21
V14.....	4.80.11
V15.....	4.80.11
V17.....	4.80.11
V18.....	4.80.11
V20.....	4.80.11
V36.....	4.80.11
V37.....	4.80.11
V38.....	4.80.11
V39.....	4.80.11
V40.....	4.80.11
V41.....	4.80.11
V45	4.83.41
V50.....	4.80.11
V52....	4.80.1
V53....	4.80.1
V54....	4.80.1
V55....	4.80.1
V56....	4.83.1
V57....	4.83.21
V58....	4.83.21
V60....	4.83.11
VCSB	4.70.11
VR12	4.65.31

Stainless steel components

AEX	5.190.1
AFEX	5.190.1
AMX	5.5.1
ASSX	5.40.1
ASVX	5.40.1
AVEX	5.190.1
AVRX	5.190.1
AX	5.165.1
CFSX	5.40.1
CFX	5.30.1 - 5.40.1
CMSX	5.40.1
CMX	5.40.1
CTX	5.40.1
CX	5.155.1
FFX	5.105.1
FFXISO	5.20.1
FLVX	5.40.1
FX	5.30.1
GGAX	5.175.1
GGLX	5.175.1
GXA	5.170.1
GXF	5.172.1
MDMAX	5.1.1
MDMX	5.1.1
MVSX	5.100.1
OX	5.160.1
PBX	5.40.1
PX	5.30.1
RFX	5.25.1
RX	5.150.1
SBCX	5.180.1
SECX	5.40.1
SECX... ARAQ	5.40.1
VBTRX	5.35.1
VBVIX	5.35.1
VSLX	5.101.1
VSRX	5.110.1
VX15	5.185.1
VX52	5.185.1
VX53	5.185.1

Notes

GENERAL INDEX

Notes

GENERAL INDEX