ROBUS IN-LINE HELICAL GEARBOX

motive®




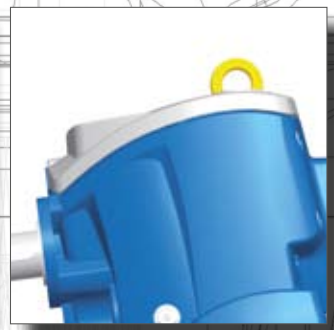





CERTIFICATO

Nr 50 100 1185 - Rev. 07

Si attesta che / This is to certify that

IL SISTEMA QUALITÀ DI
THE QUALITY SYSTEM OF

motive

MOTIVE S.r.l.

SEDE LEGALE E OPERATIVA:
REGISTERED OFFICE AND OPERATIONAL SITE:

VIA LE GHISELLE 20
I-25014 CASTENEDOLO (BS)

È CONFORME AI REQUISITI DELLA NORMA
HAS BEEN FOUND TO COMPLY WITH THE REQUIREMENTS OF

UNI EN ISO 9001:2008

QUESTO CERTIFICATO È VALIDO PER IL SEGUENTE CAMPO DI APPLICAZIONE
THIS CERTIFICATE IS VALID FOR THE FOLLOWING SCOPE

Progettazione e fabbricazione di motori elettrici, riduttori meccanici e inverter per la trasmissione di potenza (IAF 19, 18)

Design and manufacture of electrical motors, mechanical reducers and inverter for power transmissions (IAF 19, 18)

ACCREDIA

Per l'Organismo di Certificazione
For the Certification Body
TÜV Italia S.r.l.

Paolo Merenda
Business Management Service

Validità / Validity
Dal / From: 2013-03-02
Al / To: 2016-03-02

Data emissione / Presting Date
2013-05-06

PRIMA CERTIFICAZIONE / FIRST CERTIFICATION: 2001-07-20

"LA VALIDITÀ DEL PRESENTE CERTIFICATO È SUBORDINATA A SORVEGLIANZA PERIODICA A 12 MESI E AL RIESAME COMPLETO DEL SISTEMA DI GESTIONE AZIENDALE CON PERIODICITÀ TRIENNALE"

"THE VALIDITY OF THE PRESENT CERTIFICATE DEPENDS ON THE ANNUAL SURVEILLANCE EVERY 12 MONTHS AND ON THE COMPLETE REVIEW OF COMPANY'S MANAGEMENT SYSTEM AFTER THREE YEARS"

TÜV Italia S.r.l. • Gruppo TÜV SÜD • Via Carducci 125, Pal. 23 • 20099 Sesto San Giovanni (MI) • Italia • www.tuv.it

ZERTIFIKAT ◆ CERTIFICATE ◆ СЕРТИФИКАТ ◆ CERTIFICADO ◆ CERTIFICAT



VISIT AND KNOW MOTIVE THANKS TO THE MOVIE ON WWW.MOTIVE.IT

MADE IN ITALY



INDEX

Technical characteristics ROBUS 25-60 pag. 2-3



Technical characteristics ROBUS-A pag. 4-5



List of components ROBUS25-60-2 (2 reduction stages) pag. 6-7

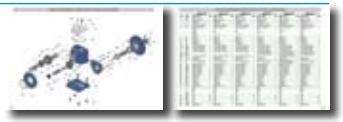

List of components ROBUS25-60-3 (3 reduction stages) pag. 8-9



List of components ROBUSA-2 and ROBUSA-3 pag. 10-11



Code system pag. 12

Kw / size / ratio pag. 13



Lubrication pag. 14

Technical data pag. 15



Technical data pag. 16

Performance table ROBUS-A pag. 17



Performance table 25-30 pag. 18

Performance table 30-35 pag. 19



Performance table 35-40 pag. 20

Performance table 40-50 pag. 21

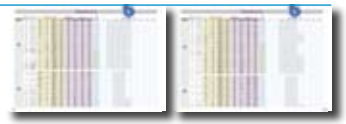

Performance table 50-60 pag. 22

Performance table 60 pag. 23



Weights pag. 24

Dimensions pag. 25



Dimensions pag. 26-27



Terms of sale and guarantee pag. 28



motive®

ROBUS 25-60 TECHNICAL CHARACTERISTICS

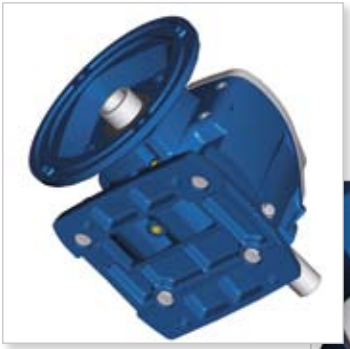

Uniquely contoured, rigid, precise, monobloc, cast iron Body, Base and Flange ensure extreme robustness.



A large top cover in light weight aluminium alloy facilitates the inspection

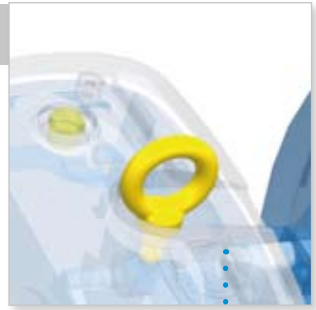

Except version A, all Robus sizes have a screw-on lifting eyebolt



Modular design with detachable output flange and foot base allows easy and quick conversion between foot and flange mounting







Various detachable foot bases in solid cast iron make Robus interchangeable with any other gearbox brand

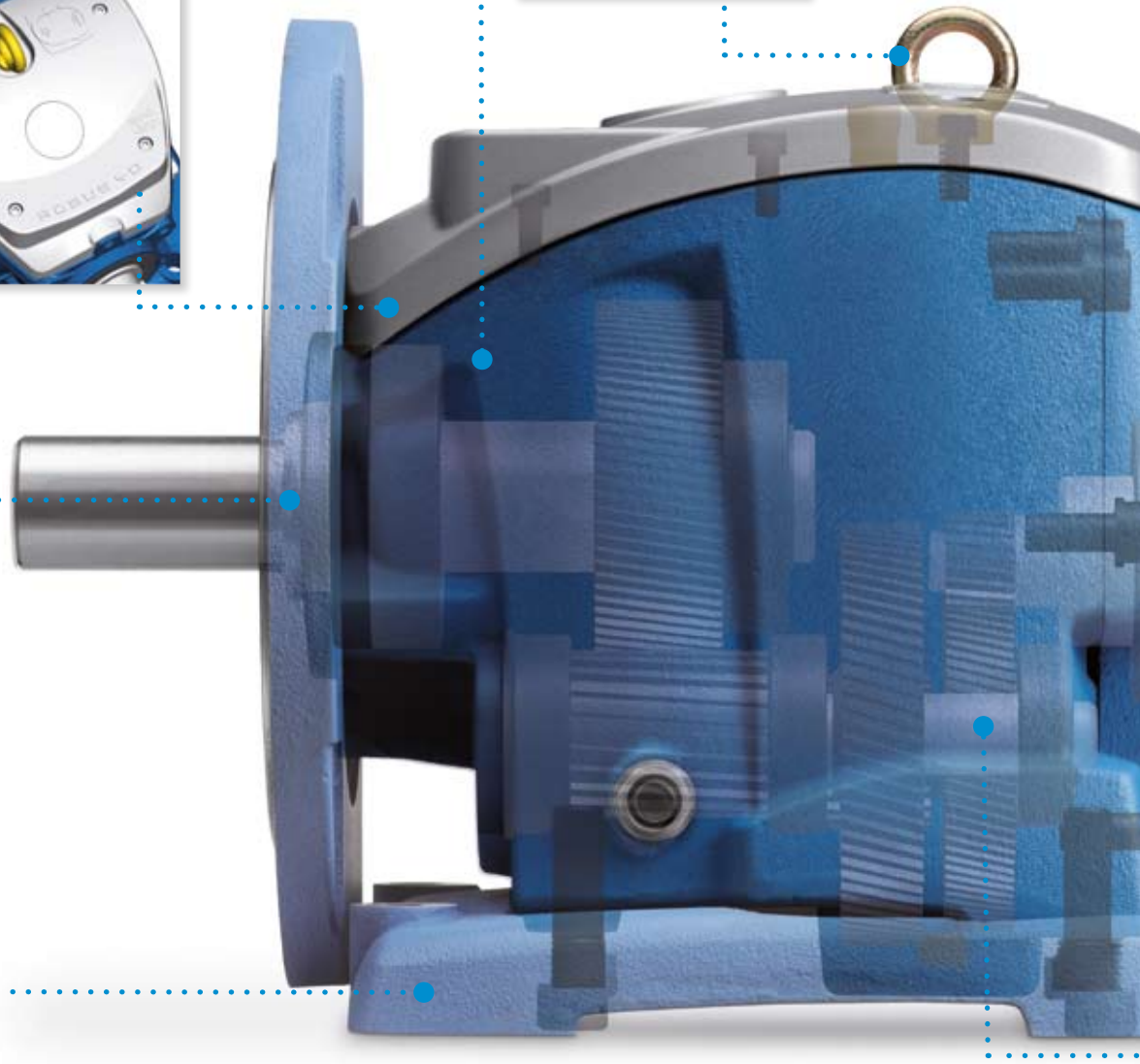

REGISTERED DESIGN

FLEXIBLE MOUNTING



Easy to examine and maintan.

Minimum maintenance requirement.
All sizes are supplied with long-life synthetic oil.



IEC flange and hollow shaft.

Choice of hollow input flanges permits direct mounting of any standard motor





Unique construction of Robus makes it possible to mount any size in any position.
This flexibility is achieved by:

+ ZZ autolubricating bearings on input and output shaft

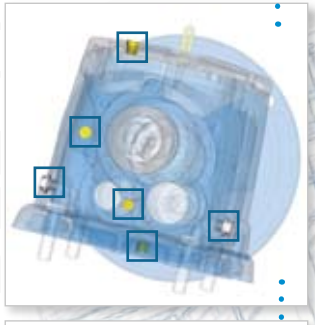

6 interchangeable plugs, including one breather plug and a level plug
Please note that the vent plug also allows you to reduce the internal pressure on seals, and thus increases the efficiency of the gearbox



+ mechanical parts locked in their positions by snap rings and spacers.This also ensures better absorbtion of axial thrust and prolongs the life of bearings

ENGINEERED FOR HIGHER RELIABILITY



Use of high strength steels and case hardening to 58 ±2 HRC reduce the wear rate in wheels.
All wheels are profile ground to Din 3962 class 6 accuracy for low noise and high efficiency.

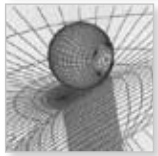

The surface is exposed to a bombardment of micro-spheres that induces compression and increases further the fatigue resistance.



Shafts are made from 42CrMo4 steel and tempered to reach a hardness of 23-35 HRC, thus increasing their capacity to withstand shearing stresses.



If the mechanical robustness and the service factor of an helical gearbox are mainly influenced by the centres distance of the last stage, Robus confirms to be very robust (see "X2" at page 19)



Single stages ratios between 2 and 6, together with proper gears sizes, result mathematically in higher teeth number and size (module) of each wheel and a better fractioned load among the reduction stages. That influences both durabilty and torque transmission capability



Dual bearing support on the input shaft assures precise alignment of the first stage gears and reduces vibrations and consequent gear wear



Intermediate shaft is rigidly supported by 3 bearings, with no overhang wheel, thus imparting greater flexural strengh and better meshing. This increases the overloading capacity and takes to lower noise



Smaller overhang distance of output shaft from supporting bearing in order to withstand higher radial loads



Abounding bearings size, in order to withstand higher loads

ROBUS-A TECHNICAL CHARACTERISTICS



Main body of a single piece of aluminum, for an optimal compromise between weight, rigidity and precision

ROBUST



Modular design with detachable output flange and foot base allows easy and quick conversion between foot and flange mounting



VERSATILE



A removable base, with several fixing holes, makes ROBUS-A interchangeable with most of the gearboxes brands

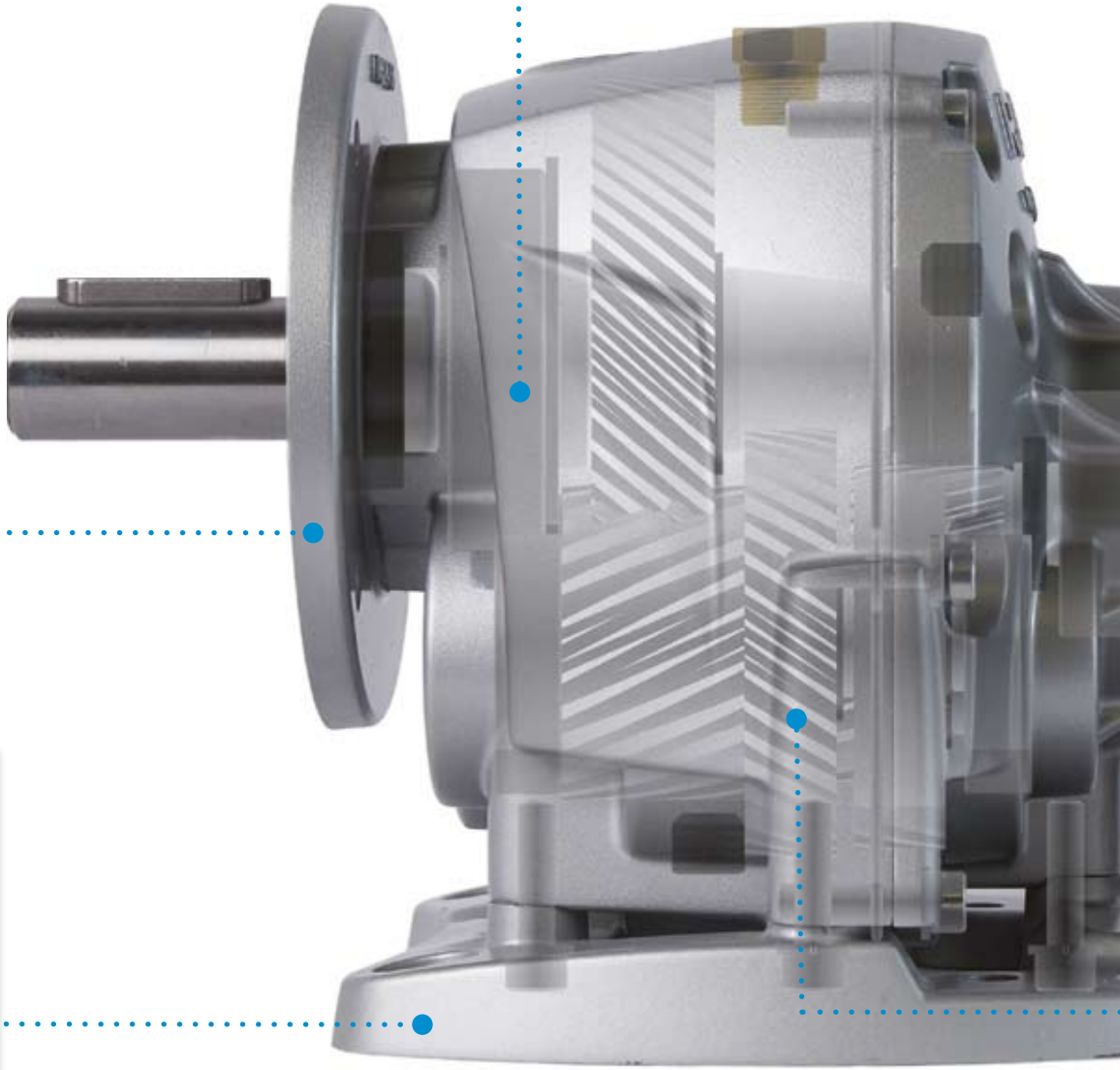

REGISTERED DESIGN

FLEXIBLE MOUNTING





IEC flange and hollow shaft.

Choice of hollow input flanges permits direct mounting of any standard motor



Unique construction of Robus-A makes it possible to mount any size in any position.
This flexibility is achieved by:

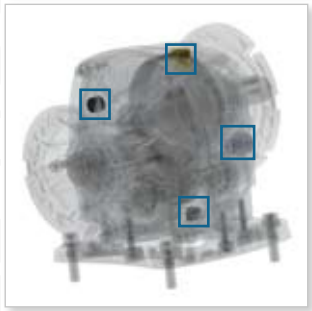

+ ZZ autolubricating bearings on input and output shaft



+ 4 interchangeable plugs, including one breather plug and a level plug
Please note that the vent plug also allows you to reduce the internal pressure on seals, and thus increases the efficiency of the gearbox

+ mechanical parts locked in their positions by snap rings and spacers. This also ensures better absorbtion of axial thrust and prolongs the life of bearings

ENGINEERED FOR HIGHER RELIABILITY



Use of high strength steels and case hardening to 58 ±2 HRC reduce the wear rate in wheels. All wheels are profile ground to Din 3962 class 6 accuracy for low noise and high efficiency.

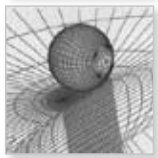

The surface is exposed to a bombardment of micro-spheres that induces compression and increases further the fatigue resistance.



Shafts are made from 42CrMo4 steel and tempered to reach a hardness of 23-35 HRC, thus increasing their capacity to withstand shearing stresses.



If the mechanical robustness and the service factor of an helical gearbox are mainly influenced by the centres distance of the last stage, Robus-A confirms to be very robust (see "X2" at page 19)



Single stages ratios between 2 and 6, together with proper gears sizes, result mathematically in higher teeth number and size (module) of each wheel and a better fractioned load among the reduction stages. That influences both durabilty and torque transmission capability



Dual bearing support on the input shaft assures precise alignment of the first stage gears and reduces vibrations and consequent gear wear



Intermediate shaft is with no overhang wheel, thus imparting greater flexural strengh and better meshing. This increases the overloading capacity and takes to lower noise



Smaller overhang distance of output shaft from supporting bearing in order to withstand higher radial loads



Abounding bearings size, in order to withstand higher loads

LIST OF COMPONENTS ROBUS 25-60 2 (2 REDUCTION STAGES)

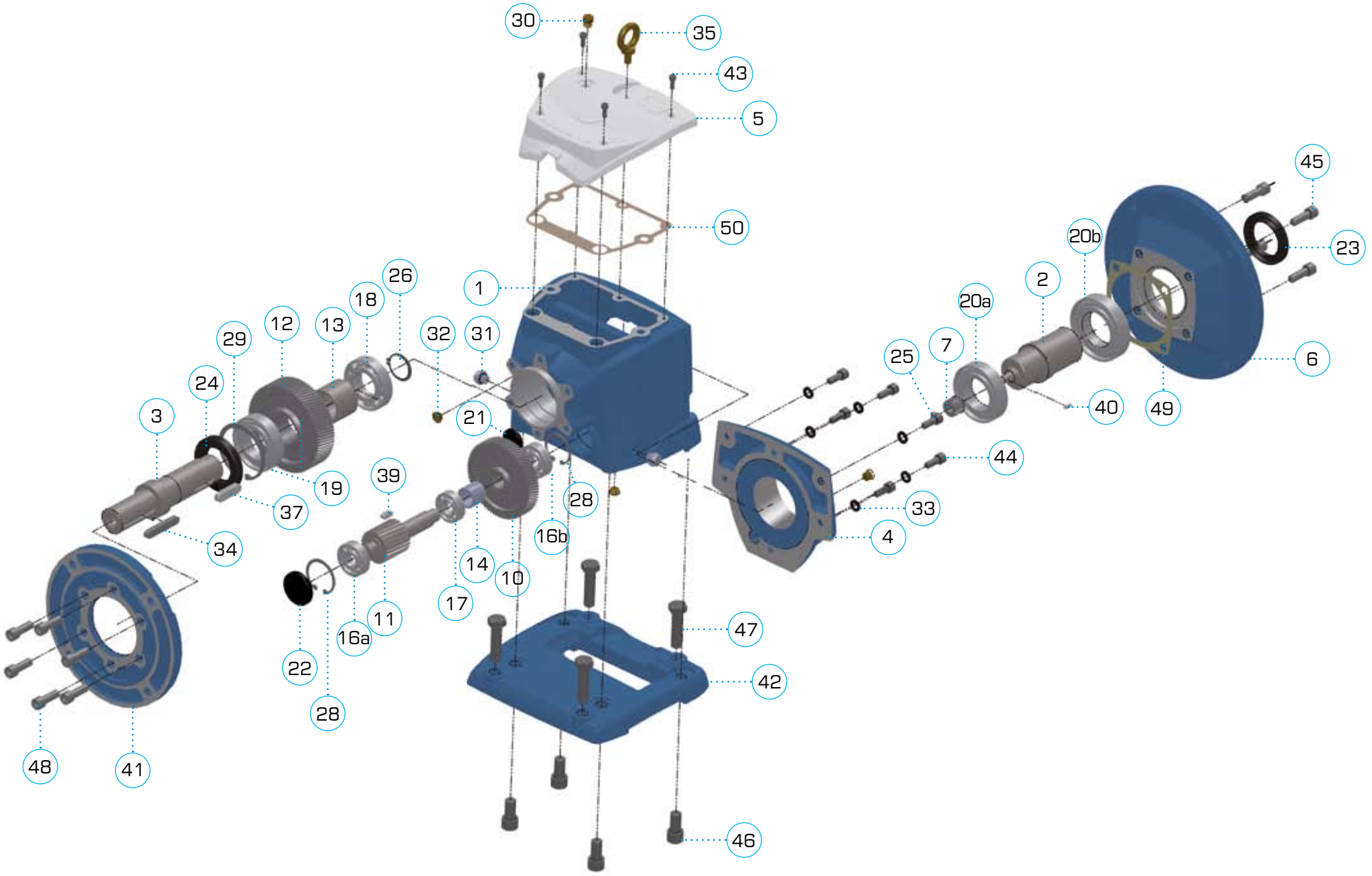

LIST OF COMPONENTS ROBUS 25-60 2 (2 REDUCTION STAGES)

		ROBUS25-2		ROBUS30-2		ROBUS35-2		ROBUS40-2		ROBUS50-2		ROBUS60-2	
item	**code**	**description**	**q.ty**	**description**	**q.ty**	**description**	**q.ty**	**description**	**q.ty**	**description**	**q.ty**	**description**	**q.ty**
1	HOU	housing	1	housing	1	housing	1	housing	1	housing	1	housing	1
2	ISH	input shaft	1	input shaft	1	input shaft	1	input shaft	1	input shaft	1	input shaft	1
3	OSH	output shaft D25xL50 D30xL60	1	output shaft D30xL60 D35xL70	1	output shaft D35xL70 D40xL80	1	output shaft D40xL80 D50xL100	1	output shaft D50xL100 D60xL120	1	output shaft D60xL120 D70xL140	1
4	ICV	input cover	1	input cover	1	input cover	1	input cover	1	input cover	1	input cover	1
5	TCV	top cover	1	top cover	1	top cover	1	top cover	1	top cover	1	top cover	1
6	IFL	input flange 63B5 71B5 80B5 90B5 100/112	1	input flange 71 80 90 100/112	1	input flange 71 80 90 100/112	1	input flange 80 90 100/112 132	1	input flange 90 100/112 132 160	1	input flange 100/112 132 160 180 200	1
7	P1	pinion 1	1	pinion 1	1	pinion 1	1	pinion 1	1	pinion 1	1	pinion 1	1
10	G2	gear 2	1	gear 2	1	gear 2	1	gear 2	1	gear 2	1	gear 2	1
11	P3	pinion 3	1	pinion 3	1	pinion 3	1	pinion 3	1	pinion 3	1	pinion 3	1
12	G3	gear 3	1	gear 3	1	gear 3	1	gear 3	1	gear 3	1	gear 3	1
13	SP	spacer	1	spacer	1	spacer	1	spacer	1	spacer	1	spacer	1
14	SP	spacer	1	spacer	1	spacer	1	spacer	1	spacer	1	spacer	1
16a	BEA	bearing 6202	1	bearing 6302	1	bearing 6304	1	bearing 6304	1	bearing 6306	1	Bearing 6307	1
16b	BEA	bearing 6202ZZ	1	bearing 6203ZZ	1	bearing 6204ZZ	1	bearing 6204ZZ	1	bearing 6306ZZ	1	Bearing 6307ZZ	1
17	BEA	bearing 6003	1	bearing 6004	1	bearing 6205	1	bearing 6205	1	bearing 6207	1	Bearing 6208	1
18	BEA	bearing 6205	1	bearing 7206	1	bearing 7207	1	bearing 7208	1	bearing 6210	1	Bearing 6212	1
19	BEA	bearing 6206ZZ	1	bearing 7207ZZ	1	bearing 7208ZZ	1	bearing 7209ZZ	1	bearing 6311ZZ	1	Bearing 6313-zz	1
20a }	BEA							bearing 6210ZZ	1	bearing 6212ZZ }	1	bearing 6215-zz	1
20b }	BEA							bearing 6211ZZ	1	bearing 6213ZZ }	1	bearing 6216-zz	1
20 ↕	BEA	bearing 6008ZZ	2	bearing 6009ZZ	2	bearing 6009ZZ	2			bearing 6009ZZ ↕	2		
21	COV	plug seal D25	1	plug seal D30	1	plug seal D35	1	plug seal D35	1	plug seal D42	1	plug seal D52	1
22	COV	plug seal D35	1	plug seal D42	1	plug seal D52	1	plug seal D52	1	plug seal D72	1	plug seal D80	1
23	OS	oil seal 40x55x8	1	oil seal 45x60x9	1	oil seal 60x45x9	1	oil seal 55x80x10	1	oil seal 65x90x12 ↕ oil seal 45x60x10	1 1	oil seal 80x105x13	1
24	OS	oil seal 62x35x11	1	oil seal 40x72x10	1	oil seal 50x80x10	1	oil seal 55x85x12	1	oil seal 65x120x15	1	oil seal 72x140x15	1
25	SNR	snap ring	1	snap ring	1	snap ring	1	snap ring	1	snap ring	1	snap ring	1
26	SNR	snap ring	1	snap ring	1	snap ring	1	snap ring	1	snap ring	1	snap ring	1
27	SNR	snap ring	2	snap ring	2	snap ring	2	snap ring	2	snap ring	2	snap ring	1
28	SNR	snap ring	2	snap ring	2	snap ring	2	snap ring	2	snap ring	2	snap ring	2
29	SNR	snap ring	1	snap ring	1	snap ring	1	snap ring	1	snap ring	1	snap ring	1
30	BPL	breather plug	1	breather plug	1	breather plug	1	breather plug	1	breather plug	1	breather plug	1
31	FPL	filler plug	6	filler plug	6	filler plug	6	filler plug	6	filler plug	6	filler plug	6
32	LPL	level plug	1	level plug	1	level plug	1	level plug	1	level plug	1	level plug	1
33	WSH	washer	4	washer	4	washer	4	washer	4	washer	4	washer	4
34	KEY	key	1	key	1	key	1	key	1	key	1	key	1
35	KEY	eye-bolt	1	eye-bolt	1	eye-bolt	1	eye-bolt	1	eye-bolt	1	eye-bolt	1
37	KEY	key	1	key	1	key	1	key	1	key	1	key	1
39	KEY	key	1	key	1	key	1	key	1	key	1	key	1
40	KEY	key	1	key	1	key	1	key	1	key	1	key	1
41	OFL	output flange 200 160	1	output flange 200 160	1	output flange 250 200	1	output flange 300 250	1	output flange 350 300	1	output flange 450 350	1
42		base	1	base	1	base	1	base	1	base	1	base	1
	FSW	SW		SW		SW		SW		SW		SW	
	FBF	BF		BF		BF		BF		BF		BF	
43	SCR	screw	6	screw	6	screw	6	screw	6	screw	6	screw	6
44	SCR	screw	6	screw	6	screw	6	screw	6	screw	6	screw	6
45	SCR	screw	4	screw	4	screw	4	screw	4	screw	4	screw	4
46	SCR	screw	4	screw	4	screw	4	screw	4	screw	4	screw	4
47	SCR	screw	4	screw	4	screw	4	screw	4	screw	4	screw	4
48	SCR	screw	6	screw	6	screw	6	screw	6	screw	6	screw	6
49	GK49	gasket	1	gasket	1	gasket	1	gasket	1	gasket	1	gasket	1
50	GK50	gasket	1	gasket	1	gasket	1	gasket	1	gasket	1	gasket	1

LIST OF COMPONENTS ROBUS 25-60 3 (3 REDUCTION STAGES)

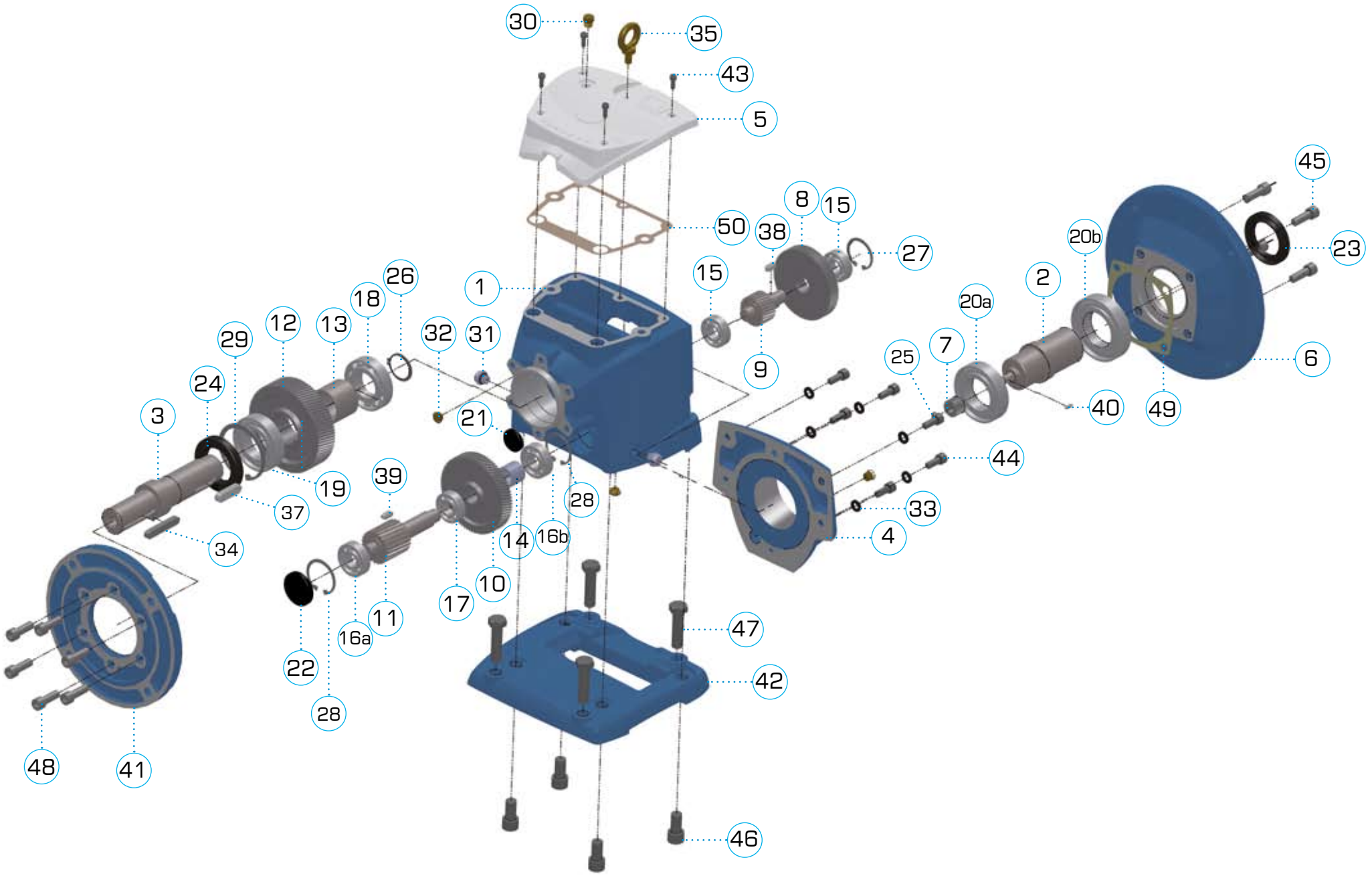

LIST OF COMPONENTS ROBUS 25-60 3 (3 REDUCTION STAGES)

		ROBUS25-3		ROBUS30-3		ROBUS35-3		ROBUS40-3		ROBUS50-3		ROBUS60-3	
item	**code**	**description**	**q.ty**	**description**	**q.ty**	**description**	**q.ty**	**description**	**q.ty**	**description**	**q.ty**	**description**	**q.ty**
1	HOU	housing	1	housing	1	housing	1	housing	1	housing	1	housing	1
2	ISH	input shaft	1	input shaft	1	input shaft	1	input shaft	1	input shaft	1	input shaft	1
3	OSH	output shaft D25xL50 D30xL60	1	output shaft D30xL60 D35xL70	1	output shaft D35xL70 D40xL80	1	output shaft D40xL80 D50xL100	1	output shaft D50xL100 D60xL120	1	output shaft D60xL120 D70xL140	1
4	ICV	input cover	1	input cover	1	input cover	1	input cover	1	input cover	1	input cover	1
5	TCV	top cover	1	top cover	1	top cover	1	top cover	1	top cover	1	top cover	1
6	IFL	input flange 63B5 71B5 80B5 90B5 100/112	1	input flange 71 80 90 100/112	1	input flange 71 80 90 100/112	1	input flange 80 90 100/112 132	1	input flange 90 100/112 132 160	1	input flange 100/112 132 160 180 200	1
7	P1	pinion 1	1	pinion 1	1	pinion 1	1	pinion 1	1	pinion 1	1	pinion 1	1
8	G1	gear 1	1	gear 1	1	gear 1	1	gear 1	1	gear 1	1	gear 1	1
9	P2	pinion 2	1	pinion 2	1	pinion 2	1	pinion 2	1	pinion 2	1	pinion 2	1
10	G2	gear 2	1	gear 2	1	gear 2	1	gear 2	1	gear 2	1	gear 2	1
11	P3	pinion 3	1	pinion 3	1	pinion 3	1	pinion 3	1	pinion 3	1	pinion 3	1
12	G3	gear 3	1	gear 3	1	gear 3	1	gear 3	1	gear 3	1	gear 3	1
13	SP	spacer D30.5xL24	1	spacer D35.5xL32.5	1	spacer D40.5xL36.6	1	spacer	1	spacer D55.5xL45	1	spacer D65.5xL50	1
14	SP	spacer D20xL22	1	spacer D20.5xL23.5	1	spacer D21.5xL24.5	1	spacer	1	spacer D35xL32	1	spacer D40.5xL38	1
15inp	BEA	bearing 6002ZZ	1	bearing 6003ZZ	1	bearing 6203ZZ	1	bearing 6204ZZ	1	bearing 6206ZZ	1	bearing 6207ZZ	1
15out	BEA	bearing 6002	2	bearing 6003	2	bearing 6203	2	bearing 6204	2	bearing 6206	2	Bearing 6207	2
16a	BEA	bearing 6202	1	bearing 6302	1	bearing 6304	1	bearing 6304	1	bearing 6306	1	Bearing 6307	1
16b	BEA	bearing 6202ZZ	1	bearing 6203ZZ	1	bearing 6204ZZ	1	bearing 6204ZZ	1	bearing 6306ZZ	1	Bearing 6307ZZ	1
17	BEA	bearing 6003	1	bearing 6004	1	bearing 6205	1	bearing 6205	1	bearing 6207	1	Bearing 6208	1
18	BEA	bearing 6205	1	bearing 7206	1	bearing 7207	1	bearing 7208	1	bearing 6210	1	Bearing 6212	1
19	BEA	bearing 6206	1	bearing 7207ZZ	1	bearing 7208ZZ	1	bearing 7209ZZ	1	bearing 6311ZZ	1	Bearing 6313ZZ	1
20a	BEA							bearing 6210ZZ	1	bearing 6212ZZ }	1	bearing 6215ZZ	1
20b	BEA							bearing 6211ZZ	1	bearing 6213ZZ }	1	bearing 6216ZZ	1
20	BEA	bearing 6008	2	bearing 6009ZZ	2	bearing 6009ZZ	2			bearing 6009ZZ	2		
21	COV	plug seal D25	1	plug seal D30	1	plug seal D35	1	plug seal D35	1	plug seal D42	1	plug seal D52	1
22	COV	plug seal D35	1	plug seal D42	1	plug seal D52	1	plug seal D52	1	plug seal D72	1	plug seal D80	1
23	OS	oil seal 40x55x8	1	oil seal 45x60x9	1	oil seal 60x45x9	1	oil seal 55x80x10	1	oil seal 65x90x12 oil seal 45x60x10	1	oil seal 80x105x13	1
24	OS	oil seal 35x62x11	1	oil seal 40x72x10	1	oil seal 50x80x10	1	oil seal 55x85x12	1	oil seal 65x120x15	1	oil seal 72x140x15	1
25	SNR	snap ring	1	snap ring	1	snap ring	1	snap ring	1	snap ring	1	snap ring	1
26	SNR	snap ring	1	snap ring	1	snap ring	1	snap ring	1	snap ring	1	snap ring	1
27	SNR	snap ring	2	snap ring D35	2	snap ring	2	snap ring	2	snap ring	2	snap ring	1
28	SNR	snap ring	2	snap ring	2	snap ring	2	snap ring	2	snap ring	2	snap ring	2
29	SNR	snap ring	1	snap ring	1	snap ring	1	snap ring	1	snap ring	1	snap ring	1
30	BPL	breather plug	1	breather plug	1	breather plug	1	breather plug	1	breather plug	1	breather plug	1
31	FPL	filler plug	6	filler plug	6	filler plug	6	filler plug	6	filler plug	6	filler plug	6
32	LPL	level plug	1	level plug	1	level plug	1	level plug	1	level plug	1	level plug	1
33	WSH												
34	KEY	key	1	key	1	key	1	key	1	key	1	key	1
35	KEY	eye-bolt	1	eye-bolt	1	eye-bolt	1	eye-bolt	1	eye-bolt	1	eye-bolt	1
37	KEY	key	1	key	1	key	1	key	1	key	1	key	1
38	KEY	key	1	key	1	key	1	key	1	key	1	key	1
39	KEY	key	1	key	1	key	1	key	1	key	1	key	1
40	KEY	Key	1	Key	1	Key	1	Key	1	Key	1	Key	1
41	OFL	output flange 200 160	1	output flange 200 160	1	output flange 250 200	1	output flange 300 250	1	output flange 350 300	1	output flange 450 350	1
42	FSW FBF	base SW BF	1	base SW BF	1	base SW BF	1	base SW BF	1	base SW BF	1	base SW BF	1
43	SCR	screw	6	screw	6	screw	6	screw	6	screw	6	screw	6
44	SCR	screw	6	screw	6	screw	6	screw	6	screw	6	screw	6
45	SCR	screw	4	screw	4	screw	4	screw	4	screw	4	screw	4
46	SCR	screw	4	screw	4	screw	4	screw	4	screw	4	screw	4
47	SCR	screw	4	screw	4	screw	4	screw	4	screw	4	screw	4
48	SCR	screw	6	screw	6	screw	6	screw	6	screw	6	screw	6
49	GK49	gasket	1	gasket	1	gasket	1	gasket	1	gasket	1	gasket	1
50	GK50	gasket	1	gasket	1	gasket	1	gasket	1	gasket	1	gasket	1

LIST OF COMPONENTS ROBUS A2-2 AND ROBUS A2-3

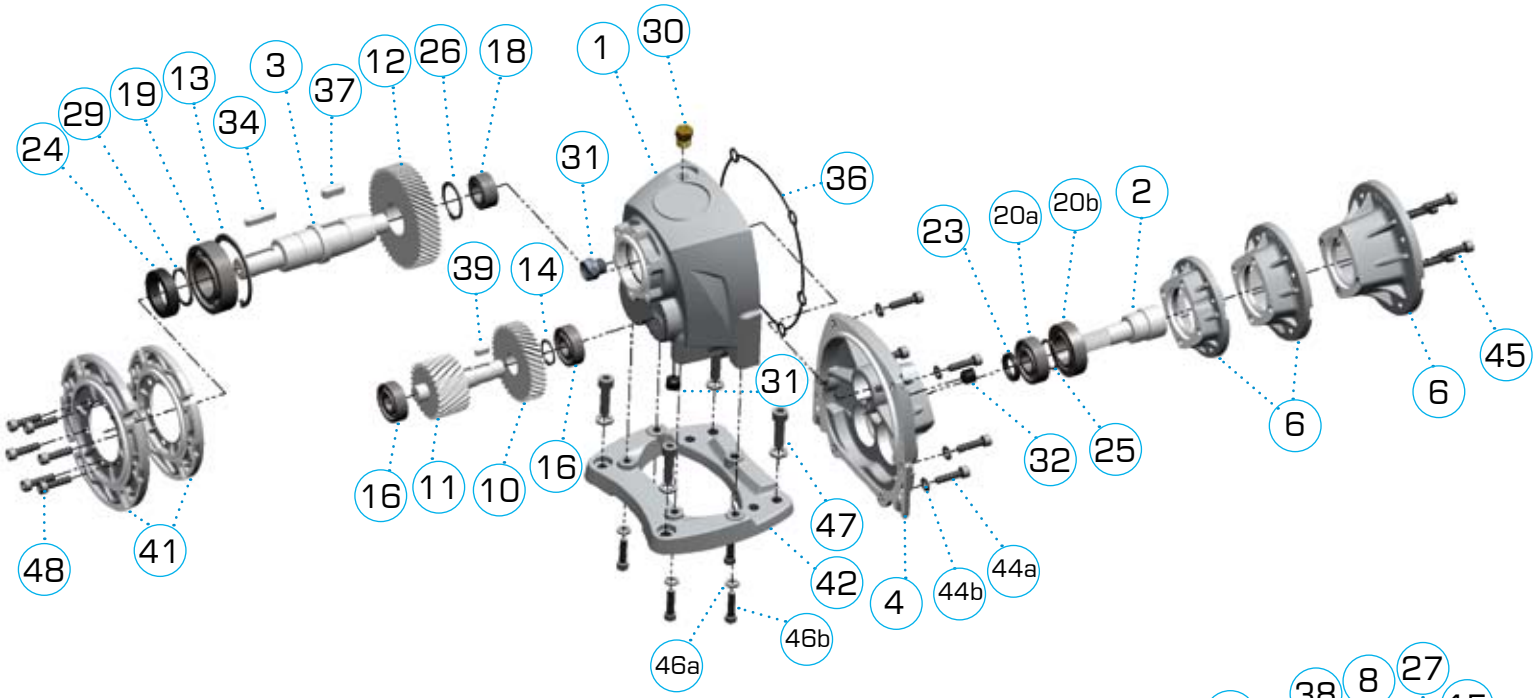

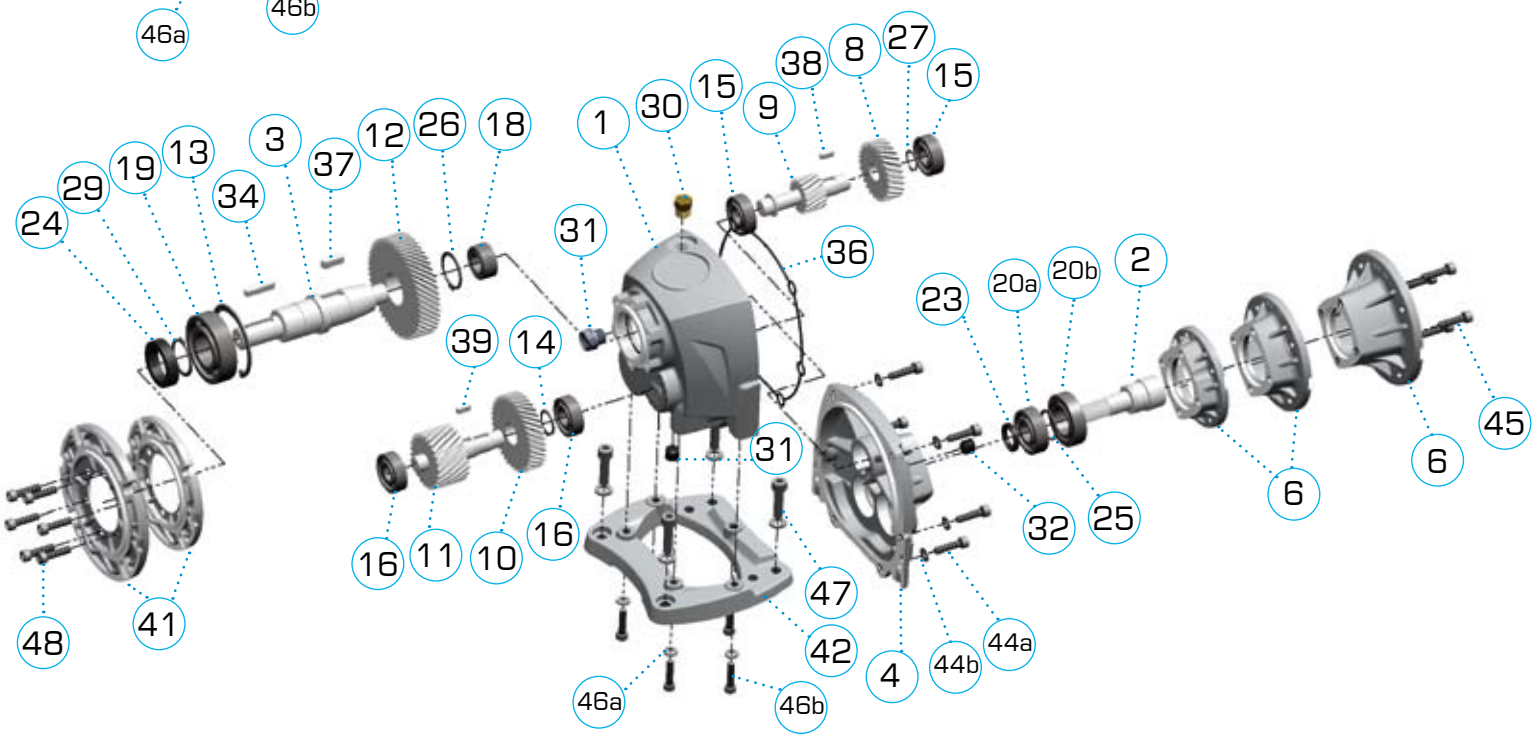

item	code	description	q.ty
list of components Robus A2-2 (2 reduction stages)			
1	HOU	Housing	1
2	ISH-P1	Input shaft with integrated pinion	1
3	OSH	Output shaft D20x40 D25x50	1
4	ICV	Input cover	1
6	IFL	Input flange 63B14 71B14 80B14	1
10	G2	Gear 2	1
11	P3	Pinion 3	1
12	G3	Gear 3	1
13	SNR	circlip	1
14	SNR	circlip	1
16	BEA	Bearing, 6202ZZ	2
18	BEA	Bearing, NA4903	1
19	BEA	Bearing, 6206ZZ	1
20a	BEA	Bearing, 6203ZZ	1
20b	BEA	Bearing, 6005ZZ	1
23	OS	Oil seal, 17X25X	1
24	OS	Oil seal, 30X42X10	1
25	SNR	circlip	1
26	SNR	circlip	1
29	SNR	circlip	1
30	BPL	Breather plug 1/4”	1
31	FPL	Filler plug 1/4”	2
32	LPL	Level plug 1/4”	1
34	KEY	key	1
36	OR	o-ring	1
37	KEY	key	1
39	KEY	key	1
41	OFL	Output flange 120 140	1
42	FT	Base	1

item	code	description	q.tà
additional components Robus A2-3 (3 reduction stages)			
8	G1	Gear 1	1
9	P2	Pinion 2	1
15	BEA	Bearing, 6202ZZ	2
27	SNR	External Circlip (G1)	1
38	KEY	Key	1
39	KEY	Key	1



CODE SYSTEM



1 first 4 digits describe the ROBUS size

RB40	=ROBUS 40
RB50	=ROBUS 50
RBA2	=ROBUS A2
etc	

2 then 1 digit tell the nr of stages

2	=2 stages
3	=3 stages

3 then 3 digits are the rated ratio

020	=i:20
120	=i:120
etc	







4 then 3 digits for the mounting type

FSW	=base type SW
FBF	=base type BF

120	=output flange 56B5 KP=120
140	=output flange 63B5 KP=140
160	=output flange 71B5 KP=160
200	=output flange 80/90B5 KP=200
250	=output flange 100/112B5 KP=250
300	=output flange 132B5 KP=300
350	=output flange 160/180 KP=350
450	=output flange 200 KP=450

UNV	=without foot or output flange



5 3 digits for the input flange (that determines the input hole diameter too)

714	=71B14
805	=80B5
905	=90B5
125	=100-112B5
135	=132B5
etc ...	

6 D2 to indicate whether the output shaft is the biggest option. For example, Robus 25 may have an output shaft with diameter 25 or 30mm. If you ask the 30mm one, write D2 at the end of the code

For instance:

RB603070FSW135

- ROBUS 60
- 3 stages
- ratio i:70
- SW foot mounting
- input PAM flange 132 B5

Plate:

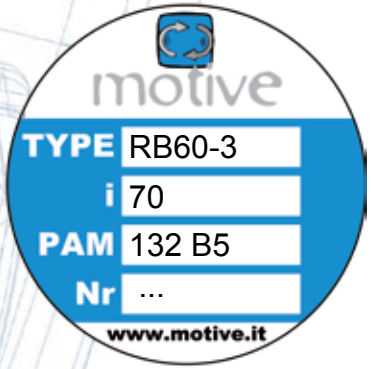

KW / SIZE / RATIO

service factor fs ≥ 1.5

input n1 = 1450rpm

imput PAM	63			71			80			90			100/112				132				160		180		200	
	11 mm			14 mm			19 mm			24 mm			28 mm				38 mm				42 mm		48 mm		55mm	
P_{n1} kW	0,13	0,18	0,25	0,25	0,37	0,55	0,55	0,75	1,1	1,1	1,5	2,2	2,2	3	4	5,5	5,5	7,5	9,2	11	11	15	18,5	22	30	
P_{n1} Hp	0,18	0,25	0,35	0,35	0,5	0,75	0,75	1	1,5	1,5	2	3	3	4	5,5	7,5	7,5	10	12,5	15	15	20	25	30	40	
120			25	25	30	35	40	40	50	50	50	50	50	50	60											120
110	A2	A2																								110
100					25	30	35	35	40	40	40				50	60	60	60								100
90																										90
80							30	30	35			40							60							80
70			A2	A2		25				35	35		40	40		50	50	60								70
60							25	25	30			35								60						60
55					A2					30	30		35	35	40						60	60				55
50						A2			25			30				50	50	50	60	60						50
45							A2	A2		25	25		30	30	35											45
40									A2			A2				40	40	50	50	50			60	60	60	40
35															35											35
30													25	25		50	50				60	60				30
25															40											25
20													30	30	35	60	60	60	60	60						20
15																			50	50			60	60		15
10																									60	10
5																										5
4																										4

ROBUS ratio i:

= 3 stages

= 2 stages

LUBRICATION

Each Robus is supplied with long-life synthetic oil and do not require any maintenance.
The oil quantity is suitable for B3 mounting position

ROBUS	oil (lt)						ISO	temp.	oil type	
	B3	B6	B7	B8	V5	V6				
A2	0,35	0,55	0,65	0,6	0,6	0,55	VG 220	-25 +80°C	Mobil Glygoyle 220	Shell Omala S4 320
25	0,3	0,75	0,95	0,95	1,15	0,85				
30	0,7	1,5	1,5	1,5	2,3	1,6				
35	1,1	2,2	2,2	2	3,5	3,6				
40	1,2	2,5	3,4	3,4	4,2	3,8				
50	2,3	6,3	6,5	6,5	7,8	6,7				
60	4,6	11,3	11,7	11,7	13,5	11,7				

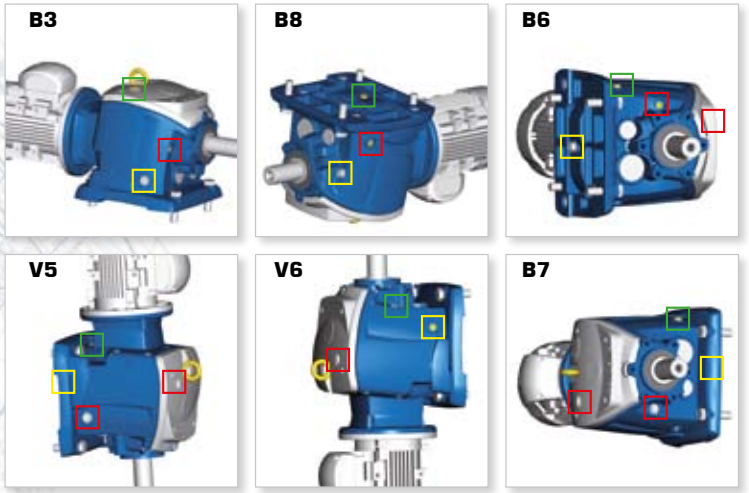

After adapting the oil quantity, each Robus can be mounted in ANY position, thus giving big advantages in the stock management and lead time, thanks to the following 3 characteristics:

1



ZZ autolubricating bearings on input and output shaft

2

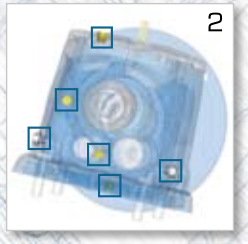

6 interchangeable plugs, including one breather plug and a level plug. Level and breather plug must be positioned according to this chart

3



mechanical parts locked in their positions by circlips and spacers. This also ensures better absorbtion of axial thrust and prolongs the life of bearings

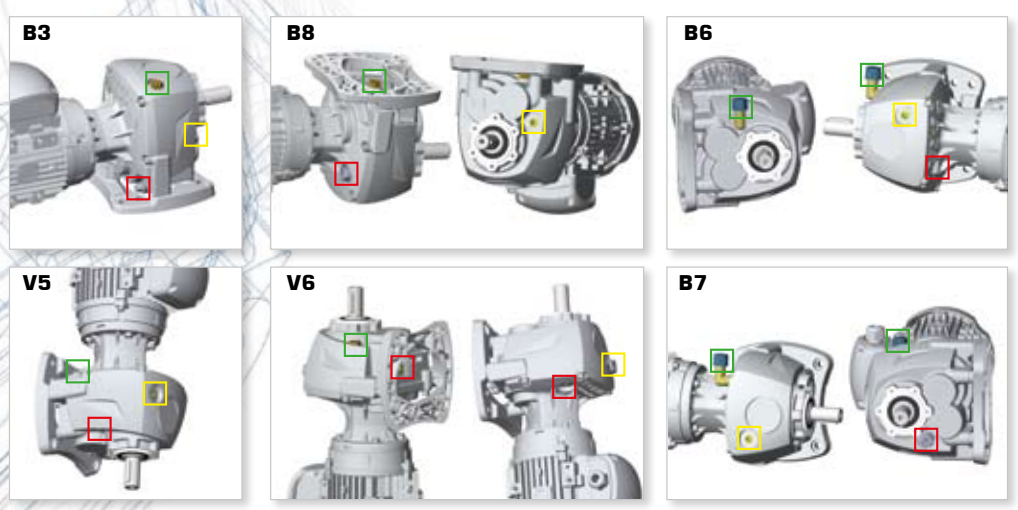



breather plug | level plug | filler plug | Elbow vent plug

Rated output torque M_{n2} [Nm]
Torque output transmissible under uniform loading and referred to the input speed n_1 and the corresponding output speed n_2.
The output torque can be calculated with the following formula:

$$M_{n2} = \frac{P_{n1}\,[kW] \cdot 9550}{n_2} \cdot \eta$$

Torque demand M_{r2} [Nm]
Torque calculated based on application requirements. It must be ≤ M_{n2} of the chosen BOX unit.

Input power P_{n1} [kW]
This is the power value of the motor applied to the input shaft and corresponding to a certain input speed n_1, a service factor $f_s = 1$ and a duty service S_1.
It is even possibile to calculate the motorsize necessary by using the formula:

$$P_{n1}\,[kW] = \frac{M_{r2} \cdot n_2}{9550 \cdot \eta}$$

Since the value calculated in this way could not really correspond to an input power actually available in the IEC standardised motors, it will be necessari to choose, among the input powers available, the one which is immediately higher, checking this in the Motive catalogue of the motors.

Efficiency η [%]

An inherent factor in the selection wormgear boxes is the efficiency h, defined as the ratio between the mechanical power coming out from the output shaft, and the power in the input shaft:

$$\eta = \frac{P_{n2}}{P_{n1}}$$

The efficiency in helical gearboxes is mainly determined by the gearing and bearing friction.
The efficiency of ROBUS varies with the nr of stages: it's 94% when the reduction stages are 3, 96% when the stages are 2.
The starting efficiency is always less than the efficiency at rated speed

Gear ratio i
It is the relationship of the input speed n1and the output speed n_2

$$i = \frac{n_1}{n_2}$$

In the combined, the total ratio is the result of the product of the ratio of the two single boxes.

Input speed n_1 [rpm]
It is the speed the BOX unit is driven at.

Output speed n_2 [rpm]
It is the rotation speed of the output shaft.

Service factor f_s
It is a numeric value describing the BOX unit service duty. With unavoidable approximation, it takes into consideration:

- the daily working hours **h/d**
- the load classification (see table 2), and then the moment of inertia of the driven masses.
- The number of starts per hour **s/h**
- The presence of brake motors, for which it is necessary to multiply for 1.12 the service factor value deducted by the graph 2.
- The significance of the application in terms of safety, for example lifting of parts

In the graph 2, the service factor f_{sr} required by a certain application can be attained, after having selected the proper "daily working hours" (h/d) column, by intersecting the number of starts per hour (s/h) and one of the a, b or c curves. The curves a, b and c are linked with the load classification described in the table 2.

graph 2

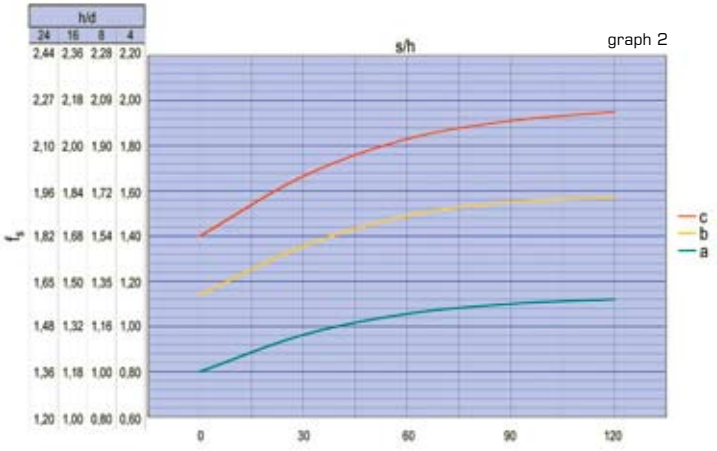

tab. 2

	load classification	application
c	uneven operation, heavy loads, larger masses to be accelerated	conveyors with violent jerks; compressors ad alternate pumps with 1 or more cylinders; machinery for bricks, tiles and clay; kneaders; milling machines; lifting winches with buckets; rotting furnaces; heavy fans or mining purposes; mixers for heavy materials; machine-tools; planing kinds; alternating saws; shears; tumbling barrels; vibrators; shredders; turntables
b	starting with moderate loads, uneven operating conditions, medium size masses to be accelerated	belt conveyors with varied load with transfer of bridge trucks for light duty; levelling machines; shakers and mixed for liquid with variable density and viscosity; machines for the food industry (kneading troughs, mincing machines, slicing machines, etc); sifting machines for sand gravel; textile industry machines; cranes, hoists, goodstifts; fertilizer scrapers; concrete mixers; folding machines; winches; crane mechanisms
a	easy starting, smooth operation, small masses be accelerated	belt conveyors for light material; centrifugal pumps; rotary gear pumps; screw feeders for light materials; lifts; bottling machines; auxiliary controls of tool machines; fans; power generators; fillers; small mixers

If, after the selection of the right M_{r2} and n_2 in the following performance tables, you don't find a ROBUS unit whose service factor f_s is ≥ of the requested one f_{sr}, you can choose a ROBUS unit in which $M_{n2} > M_{r2}$.
In fact, in order to satisfy f_{sr}, you can choose another BOX unit whose output torque is ≥ M_{c2} output torque, where:
$M_{c2} = M_{r2} \cdot f_{sr}$
Note: This rule is valid only if the new BOX unit that has been selected in this way has a service factor $f_s \geq 1$ in the performance tables.
From another point of view, the value of f_s in the performance tables refers to a case in which the effective torque requested by the application M_{r2} matches perfectly with the one appearing on the catalogue M_{n2}.
Whenever the torque indicated in the performance table is higher than the requested one, the offered service factor of the performance table can be increased according to the formula:

$$f_s \text{ real} = \frac{f_s \text{ on the table} \cdot M_{n2} \text{ on the table}}{M_{r2}}$$

The value of f_s calculated in this way must be ≥ f_{sr}.

Offered service factor

Which features determine the service factor offered by an helical gearbox?

The service factor of a gearbox is its capacity to withstand operating load and overloads, a certain number of starts, the duration of operating time, and mechanical shocks and vibrations. Thus, higher the service factor, greater is the possibility of trouble-free operation and increased life. Without aiming to be completely exhaustive, we list here the main features that influence the service factor:

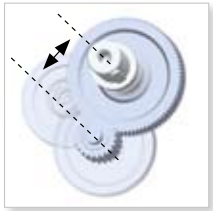

Amongst all parts, the last stage gears are subjected to highest mechanical stresses. Higher centre distance which in turn results in higher module considerably increases the service factor. ROBUS excels in the area (see measures at page 22)



Compared to fractioned or Aluminium body, the monobloc cast-iron body of ROBUS provides higher rigidity and mechanical robustness. At the same time, a one-piece body like that of ROBUS-A is more rigid and reliable than a body composed of several parts



Use of high strength steels and case hardening to 58 ±2 HRC reduce the wear rate in wheels. All wheels are profile ground to Din 3962 class 6 accuracy for low noise and high efficiency.

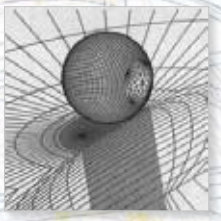

The surface is exposed to a bombardment of micro-spheres that induces compression and increases further the fatigue resistance.



Shafts are made from 42CrMo4 steel and tempered to reach a hardness of 23-35 HRC, thus increasing their capacity to withstand shearing stresses and torsion effect.



Optimal ratios (between 2 and 6) in the several stages, together with appropriate centre distances, result in higher number of teeth and size (module) of each wheel and better torque transmission fractioning through various stages. This improves the overall durability.



Dual bearing support on the input shaft ensures precise alignment of the first stage gears and reduces vibrations and consequent gear wear



If the intermediate shaft is rigidly supported on both ends, with no overhang wheel, imparts greater flexural strengh and smoother meshing



Oversized bearings (see ROBUS bearings list), allow the gearbox to withstand higher operating loads



Mechanical parts locked in their position by snap rings and spacers. This ensures better absorbtion of axial thrust and prolongs the life of bearings



Smaller overhang of output shaft from supporting bearing in order to withstand higher radial loads

PERFORMANCE TABLE ROBUS-A



ROBUS	rated ratio i:	real ratio i:	input power P_{n1} kW	Hp	motore	n_1 [rpm]	fs	output P_{n2} n_2 [rpm]	M_2[Nm]	M_2[Kgm]	stages	input connection **B14** IEC 72-1 63	71	80	90	100/112	132	160	180	200
A2 165Nm	130	134,18	0,13	0,18	63A-4	1400	1,34	10,4	112	11,3	3									
	120	119,00	0,18	0,25	63B-4	1400	1,05	11,8	137	13,9	3									
	110	109,43	0,13	0,18	63A-4	1400	1,66	12,8	91	9,2	3									
			0,18	0,25	63B-4	1400	1,20	12,8	126	12,7	3									
	100	99,54	0,13	0,18	63A-4	1400	1,78	14,1	83	8,4	3									
			0,18	0,25	63B-4	1400	1,29	14,1	115	11,6	3									
	90	92,50	0,18	0,25	63B-4	1400	1,62	15,1	107	10,8	3									
			0,25	0,35	71A-4	1400	1,17	15,1	148	15,0	3									
	85	85,05	0,18	0,25	63B-4	1400	1,69	16,5	98	9,9	3									
			0,25	0,35	71A-4	1400	1,22	16,5	136	13,8	3									
	80	81,22	0,18	0,25	63B-4	1400	1,95	17,2	94	9,5	3									
			0,25	0,35	71A-4	1400	1,41	17,2	130	13,1	3									
	75	75,68	0,18	0,25	63B-4	1400	1,95	18,5	87	8,8	3									
			0,25	0,35	71A-4	1400	1,41	18,5	121	12,2	3									
	70	69,59	0,25	0,35	71A-4	1400	1,53	20,1	112	11,3	3									
			0,37	0,5	71B-4	1400	1,04	20,1	165	16,7	3									
	65	64,21	0,25	0,35	71A-4	1400	1,74	21,8	103	10,4	3									
			0,37	0,5	71B-4	1400	1,18	21,8	152	15,4	3									
	60	59,43	0,25	0,35	71A-4	1400	1,81	23,6	95	9,6	3									
			0,37	0,5	71B-4	1400	1,23	23,6	141	14,2	3									
	55	55,15	0,25	0,35	71A-4	1400	1,89	25,4	88	8,9	3									
			0,37	0,5	71B-4	1400	1,27	25,4	131	13,2	3									
	50	50,21	0,25	0,35	71A-4	1400	1,94	27,9	80	8,1	3									
			0,37	0,5	71B-4	1400	1,31	27,9	119	12,0	3									
	45	46,05	0,37	0,5	71B-4	1400	1,49	30,4	109	11,0	3									
	40	39,33	0,37	0,5	71B-4	1400	1,80	35,6	93	9,4	3									
	35	35,26	0,37	0,5	71B-4	1400	1,65	39,7	84	8,4	3									
	30	30,12	0,55	0,75	80A-4	1400	1,55	46,5	106	10,7	3									
	25	24,70	0,37	0,5	71B-4	1400	1,49	56,7	59	5,9	3									
			0,55	0,75	80A-4	1400	1,00	56,7	89	9,0	2									
	20	19,86	0,55	0,75	80A-4	1400	1,66	70,5	72	7,2	2									
			0,75	1	80B-4	1400	1,22	70,5	98	9,8	2									
	15	15,02	0,55	0,75	80A-4	1400	1,68	93,2	54	5,5	2									
			0,75	1	80B-4	1400	1,23	93,2	74	7,4	2									
	12,5	12,75	0,55	0,75	80A-4	1400	1,68	109,8	46	4,6	2									
			0,75	1	80B-4	1400	1,23	109,8	63	6,3	2									
	10	9,97	0,55	0,75	80A-4	1400	1,68	140,4	36	3,6	2									
			0,75	1	80B-4	1400	1,23	140,4	49	4,9	2									
	7,5	7,58	0,55	0,75	80A-4	1400	1,68	184,7	27	2,8	2									
			0,75	1	80B-4	1400	1,23	184,7	37	3,8	2									
	5	5,03	0,55	0,75	80A-4	1400	1,68	278,3	18	1,8	2									
			0,75	1	80B-4	1400	1,23	278,3	25	2,5	2									
	3	2,93	0,55	0,75	80A-4	1400	1,66	477,8	11	1,1	2									
			0,75	1	80B-4	1400	1,22	477,8	14	1,5	2									

PERFORMANCE TABLE 25-30



ROBUS	rated ratio i:	real ratio i:	input power P_{n1} kW	Hp	motore	n_1 [rpm]	fs	output P_{n2} n_2 [rpm]	M_2[Nm]	M_2[Kgm]	stages	input connection **B5** IEC 72-1: 63	71	80	90	100/112	132	160	180	200
25 350Nm	120	119,93	0,13	0,18	71B-8	651	1,37	5,8	200	20,2	3									
			0,18	0,25	71A-6	910	1,31	7,9	204	20,6	3									
			0,25	0,35	71A-4	1400	1,32	11,7	192	19,4	3									
	110	106,18	0,13	0,18	71B-8	651	1,49	6,1	190	19,2	3									
			0,18	0,25	71A-6	910	1,42	8,6	189	19,0	3									
			0,37	0,5	71B-4	1400	1,01	13,2	252	25,4	3									
	100	99,12	0,37	0,5	71B-4	1400	1,26	14,1	235	23,7	3									
	90	91,47	0,55	0,75	80A-4	1400	1,20	15,3	323	32,5	3									
	80	79,29	0,55	0,75	80A-4	1400	1,34	17,7	280	28,2	3									
	70	69,57	0,55	0,75	80A-4	1400	1,50	20,1	245	24,8	3									
			0,75	1	80B-4	1400	1,10	20,1	335	33,8	3									
	60	59,94	0,75	1	80B-4	1400	1,26	23,4	288	29,1	3									
	55	57,20	0,75	1	80B-4	1400	1,46	24,5	275	27,8	3									
			1,1	1,5	80C-4	1400	1,00	24,5	403	40,7	3									
	50	49,28	0,75	1	80B-4	1400	1,64	28,4	237	23,9	3									
			1,1	1,5	90S-4	1400	1,12	28,4	348	35,1	3									
	45	46,07	0,75	1	80B-4	1400	1,68	30,4	222	22,4	3									
			1,1	1,5	90S-4	1400	1,15	30,4	325	32,8	3									
	40	39,27	0,75	1	80B-4	1400	1,94	35,7	189	19,1	3									
			1,1	1,5	90S-4	1400	1,32	35,7	277	27,9	3									
	35	32,51	1,1	1,5	90S-4	1400	1,68	43,1	229	23,1	3									
			1,5	2	90L-4	1410	1,23	43,4	310	31,3	3									
	30	30,18	1,1	1,5	90S-4	1400	1,68	46,4	213	21,5	3									
			1,5	2	90L-4	1410	1,23	46,7	288	29,1	3									
	25	24,81	1,5	2	90L-4	1410	1,41	56,8	237	23,9	3									
	20	20,99	1,5	2	90L-4	1410	2,03	67,2	200	20,2	3									
			1,9	2,6	90LB-4	1415	1,60	67,4	253	25,5	3									
			2,2	3	100LA-4	1420	1,38	67,7	298	30,1	3									
	25	24,50	0,75	1	80B-4	1400	1,94	57,1	120	12,1	2									
			1,1	1,5	80C-4	1400	1,32	57,1	176	17,8	2									
			1,1	1,5	90S-4	1400	1,32	57,1	176	17,8	2									
	20	19,95	1,5	2	90L-4	1410	1,41	70,7	195	19,6	2									
	15	15,75	1,9	2,6	90LB-4	1415	1,46	89,8	194	19,6	2									
			2,2	3	100LA-4	1420	1,26	90,2	224	22,6	2									
	13	12,68	1,9	2,6	90LB-4	1415	1,67	111,6	156	15,7	2									
			2,2	3	100LA-4	1420	1,44	112,0	180	18,2	2									
	10	10,42	1,9	2,6	90LB-4	1415	1,74	135,8	128	12,9	2									
			2,2	3	100LA-4	1420	1,50	136,3	148	14,9	2									
	7	6,84	1,9	2,6	90LB-4	1415	2,37	206,9	84	8,5	2									
			2,2	3	100LA-4	1420	2,04	207,6	97	9,8	2									
			3	4	100LB-4	1420	1,50	207,6	132	13,4	2									
	5	4,88	1,9	2,6	90LB-4	1415	2,44	290,0	60	6,1	2									
			2,2	3	100LA-4	1420	2,10	291,0	69	7,0	2									
			3	4	100LB-4	1420	1,54	291,0	95	9,5	2									
	4	4,00	1,9	2,6	90LB-4	1415	2,88	353,8	49	5,0	2									
			2,2	3	100LA-4	1420	2,49	355,0	57	5,7	2									
			3	4	100LB-4	1420	1,83	355,0	77	7,8	2									
30 450Nm	120	120,20	0,25	0,35	80B-8	690	1,31	5,7	391	39,4	3									
			0,37	0,5	80A-6	930	1,25	7,7	429	43,3	3									
			0,37	0,5	71B-4	1400	1,79	11,6	285	28,8	3									
			0,55	0,75	80A-4	1400	1,20	11,6	424	42,8	3									
	110	106,30	0,25	0,35	80B-8	690	1,31	6,5	346	34,9	3									
			0,37	0,5	80A-6	930	1,25	8,7	380	38,3	3									
			0,37	0,5	71B-4	1400	1,79	13,2	252	25,4	3									
			0,55	0,75	80A-4	1400	1,20	13,2	375	37,8	3									
	100	102,47	0,37	0,5	71B-4	1400	1,79	13,7	243	24,5	3									
			0,55	0,75	80A-4	1400	1,20	13,7	361	36,5	3									

PERFORMANCE TABLE 30-35



ROBUS	rated ratio i:	real ratio i:	input power P_{n1} kW	Hp	motore	n_1 [rpm]	fs	output P_{n2} n_2 [rpm]	M_2[Nm]	M_2[Kgm]	stages	input connection **B5** IEC 72-1 63	71	80	90	100/112	132	160	180	200
30 450Nm	90	91,24	0,55	0,75	80A-4	1400	1,44	15,3	322	32,5	3									
			0,75	1	80B-4	1400	1,06	15,3	439	44,3	3									
	80	84,26	0,55	0,75	80A-4	1400	1,56	16,6	297	30,0	3									
			0,75	1	80B-4	1400	1,15	16,6	405	40,9	3									
	70	72,29	0,75	1	80B-4	1400	1,41	19,4	348	35,1	3									
	60	60,16	0,75	1	80B-4	1400	1,94	23,3	289	29,2	3									
			1,1	1,5	90S-4	1400	1,32	23,3	424	42,8	3									
	55	55,56	1,1	1,5	90S-4	1400	1,44	25,2	392	39,5	3									
			1,5	2	90L-4	1410	1,06	25,4	531	53,5	3									
	50	49,45	1,1	1,5	90S-4	1400	1,20	28,3	349	35,2	3									
	45	47,66	1,1	1,5	90S-4	1400	1,68	29,4	336	33,9	3									
			1,5	2	90L-4	1410	1,23	29,6	455	45,9	3									
	40	39,26	1,5	2	90L-4	1410	1,59	35,9	375	37,8	3									
			1,9	2,6	90LB-4	1415	1,25	36,0	473	47,7	3									
	35	35,46	1,5	2	90L-4	1410	1,68	39,8	339	34,2	3									
			1,9	2,6	90LB-4	1415	1,32	39,9	427	43,1	3									
	30	30,44	1,5	2	90L-4	1410	1,85	46,3	291	29,3	3									
			1,9	2,6	90LB-4	1415	1,46	46,5	367	37,0	3									
	25	25,38	1,9	2,6	90LB-4	1415	1,74	55,8	306	30,9	3									
			2,2	3	100LA-4	1420	1,50	55,9	353	35,6	3									
			3	4	100LB-4	1420	1,10	55,9	481	48,6	3									
	20	22,30	2,2	3	100LA-4	1420	1,98	63,7	310	31,3	3									
			3	4	100LB-4	1420	1,46	63,7	423	42,7	3									
			4	5,5	112M-4	1420	1,09	63,7	564	56,9	3									
	23	23,02	1,5	2	90L-4	1410	1,50	61,3	225	22,7	2									
			1,9	2,6	90LB-4	1415	1,18	61,5	283	28,6	2									
	20	20,36	1,5	2	90L-4	1410	1,59	69,3	199	20,0	2									
			1,9	2,6	90LB-4	1415	1,25	69,5	251	25,3	2									
	18	18,37	1,5	2	90L-4	1410	1,76	76,8	179	18,1	2									
			1,9	2,6	90LB-4	1415	1,39	77,0	226	22,8	2									
			2,2	3	100LA-4	1420	1,20	77,3	261	26,3	2									
	15	14,27	2,2	3	100LA-4	1420	1,80	99,5	203	20,4	2									
			3	4	100LB-4	1420	1,32	99,5	276	27,9	2									
			4	5,5	112M-4	1420	0,99	99,5	369	37,2	2									
	10	9,96	4	5,5	112M-4	1420	1,65	142,6	257	26,0	2									
			5	6,8	112MB-4	1450	1,32	145,6	315	31,8	2									
	7	6,79	5	6,8	112MB-4	1450	1,77	213,5	215	21,7	2									
	5	5,66	5	6,8	112MB-4	1450	1,85	256,2	179	18,1	2									
	4	4,05	5	6,8	112MB-4	1450	3,33	358,0	128	12,9	2									
35 700Nm	120	123,20	0,25	0,35	80B-8	690	1,46	5,6	401	40,4	3									
			0,37	0,5	80A-6	930	1,40	7,5	440	44,4	3									
			0,37	0,5	71B-4	1400	2,00	11,4	292	29,5	3									
			0,55	0,75	80A-4	1400	1,35	11,4	434	43,8	3									
			0,75	1	80B-4	1400	0,99	11,4	592	59,8	3									
	110	105,60	0,25	0,35	80B-8	690	1,70	6,5	343	34,7	3									
			0,37	0,5	80A-6	930	1,62	8,8	377	38,1	3									
			0,55	0,75	80A-4	1400	1,56	13,3	372	37,6	3									
			0,75	1	80B-4	1400	1,15	13,3	508	51,2	3									
	100	98,82	0,75	1	80B-4	1400	1,41	14,2	475	47,9	3									
			1,1	1,5	80C-4	1390	0,96	14,1	702	70,8	3									
	90	84,70	0,75	1	80B-4	1400	1,76	16,5	407	41,1	3									
			1,1	1,5	90S-4	1400	1,20	16,5	597	60,3	3									
	80	79,85	0,75	1	80B-4	1400	1,94	17,5	384	38,7	3									
			1,1	1,5	90S-4	1400	1,32	17,5	563	56,8	3									
			1,5	2	90L-4	1410	0,97	17,7	763	76,9	3									
	70	68,44	1,1	1,5	90S-4	1400	1,44	20,5	483	48,7	3									
			1,5	2	90L-4	1410	1,06	20,6	654	65,9	3									

PERFORMANCE TABLE 35-40



ROBUS	rated ratio i:	real ratio i:	input power P_{n1} kW	Hp	motore	n_1 [rpm]	fs	output P_{n2} n_2 [rpm]	M_2[Nm]	M_2[Kgm]	stages	input connection **B5** IEC 72-1: 63	71	80	90	100/112	132	160	180	200
35 700Nm	60	59,29	1,5	2	90L-4	1410	1,59	23,8	566	57,1	3									
			1,9	2,6	90LB-4	1415	1,25	23,9	715	72,1	3									
			2,2	3	100LA-4	1420	1,08	24,0	825	83,2	3									
	55	55,61	1,5	2	90L-4	1410	1,32	25,4	531	53,6	3									
			1,9	2,6	90LB-4	1415	1,04	25,4	670	67,6	3									
	50	50,82	1,9	2,6	90LB-4	1415	1,46	27,8	613	61,8	3									
			2,2	3	100LA-4	1420	1,26	27,9	707	71,3	3									
	45	46,13	1,5	2	90L-4	1410	1,50	30,6	441	44,4	3									
			1,9	2,6	90LB-4	1415	1,18	30,7	556	56,1	3									
	40	41,29	2,2	3	100LA-4	1420	1,50	34,4	574	57,9	3									
			3	4	100LB-4	1420	1,10	34,4	783	79,0	3									
	35	34,25	2,2	3	100LA-4	1420	1,74	41,5	476	48,1	3									
			3	4	100LB-4	1420	1,28	41,5	650	65,5	3									
	30	30,17	3	4	100LB-4	1420	1,54	47,1	572	57,7	3									
			4	5,5	112M-4	1420	1,16	47,1	763	77,0	3									
	25	25,51	4	5,5	112M-4	1420	1,42	55,7	645	65,1	3									
			5	6,8	112MB-4	1450	1,14	56,8	790	79,7	3									
	20	19,71	4	5,5	112M-4	1420	1,82	72,0	498	50,3	3									
			5	6,8	112MB-4	1450	1,46	73,6	610	61,6	3									
	15	16,34	5	6,8	112MB-4	1450	1,64	88,7	506	51,0	3									
	25	26,40	1,9	2,6	90LB-4	1415	2,99	53,6	325	32,8	2									
	20	18,79	2,2	3	100LA-4	1420	1,92	75,6	267	26,9	2									
			3	4	100LB-4	1420	1,41	75,6	364	36,7	2									
			4	5,5	112M-4	1420	1,06	75,6	485	49,0	2									
	15	15,07	3	4	100LB-4	1420	1,98	94,2	292	29,4	2									
			4	5,5	112M-4	1420	1,49	94,2	389	39,3	2									
			5	6,8	112MB-4	1450	1,19	96,2	476	48,1	2									
	13	12,53	4	5,5	112M-4	1420	1,69	113,3	324	32,6	2									
			5	6,8	112MB-4	1450	1,35	115,7	396	40,0	2									
	10	10,05	5	6,8	112MB-4	1450	1,69	144,3	318	32,1	2									
	8	7,46	5	6,8	112MB-4	1450	2,04	194,4	236	23,8	2									
	5	5,23	5	6,8	112MB-4	1450	2,20	277,2	165	16,7	2									
	4	3,96	5	6,8	112MB-4	1450	2,61	366,2	125	12,6	2									
40 1100Nm	120	116,13	0,55	0,75	90L-8	700	1,27	6,0	819	82,6	3									
			0,75	1	90S-6	915	1,21	7,9	855	86,2	3									
			0,75	1	80B-4	1400	1,76	12,1	558	56,3	3									
			1,1	1,5	90S-4	1400	1,20	12,1	819	82,6	3									
	110	105,99	0,55	0,75	90L-8	700	1,27	6,6	748	75,4	3									
			0,75	1	90S-6	915	1,21	8,6	780	78,7	3									
			0,75	1	80B-4	1400	1,76	13,2	510	51,4	3									
			1,1	1,5	90S-4	1400	1,20	13,2	748	75,4	3									
	100	101,24	0,55	0,75	90L-8	700	1,27	6,9	714	72,0	3									
			0,75	1	90S-6	915	1,21	9,0	745	75,2	3									
			0,75	1	80B-4	1400	1,76	13,8	487	49,1	3									
			1,1	1,5	90S-4	1400	1,20	13,8	714	72,0	3									
	90	92,40	1,1	1,5	90S-4	1400	1,44	15,2	652	65,8	3									
			1,5	2	90L-4	1410	1,06	15,3	882	89,0	3									
	80	79,23	1,1	1,5	90S-4	1400	1,56	17,7	559	56,4	3									
			1,5	2	90L-4	1410	1,15	17,8	757	76,3	3									
	70	70,75	1,5	2	90L-4	1410	1,50	19,9	676	68,2	3									
			1,9	2,6	90LB-4	1415	1,18	20,0	853	86,0	3									
	60	63,05	1,9	2,6	90LB-4	1415	1,39	22,4	760	76,7	3									
			2,2	3	100LA-4	1420	1,20	22,5	877	88,5	3									
	55	52,92	2,2	3	100LA-4	1420	1,56	26,8	736	74,3	3									
			3	4	100LB-4	1420	1,15	26,8	1004	101,3	3									
	50	50,25	2,2	3	100LA-4	1420	1,68	28,3	699	70,5	3									
			3	4	100LB-4	1420	1,23	28,3	953	96,2	3									

PERFORMANCE TABLE 40-50



ROBUS	rated ratio i:	real ratio i:	input power P_{n1} kW	Hp	motore	n_1 [rpm]	fs	output P_{n2} n_2 [rpm]	M_2[Nm]	M_2[Kgm]	stages	input connection **B5** IEC 72-1: 63	71	80	90	100/112	132	160	180	200
40 1100Nm	45	44,46	3	4	100LB-4	1420	1,37	31,9	843	85,1	3									
			4	5,5	112M-4	1420	0,99	31,9	1124	113,4	3									
	40	40,81	3	4	100LB-4	1420	1,41	34,8	774	78,1	3									
			4	5,5	112M-4	1420	1,03	34,8	1032	104,1	3									
	35	33,98	3	4	100LB-4	1420	1,54	41,8	644	65,0	3									
			4	5,5	112M-4	1420	1,16	41,8	859	86,7	3									
	30	31,94	3	4	100LB-4	1420	1,68	44,5	606	61,1	3									
			4	5,5	112M-4	1420	1,26	44,5	808	81,5	3									
			5	6,8	112MB-4	1450	1,01	45,4	989	99,8	3									
	25	25,97	4	5,5	112M-4	1420	1,72	54,7	657	66,3	3									
			5,5	7,5	132S-4	1450	1,25	55,8	884	89,2	3									
	20	20,33	5,5	7,5	132S-4	1450	1,44	71,3	692	69,8	3									
			7,5	10	132M-4	1450	1,06	71,3	944	95,2	3									
	15	14,95	7,5	10	132M-4	1450	1,32	97,0	694	70,0	3									
			9,2	12,5	132MB-4	1450	1,08	97,0	852	85,9	3									
	25	24,05	2,2	3	100LA-4	1420	1,80	59,0	342	34,5	2									
			3	4	100LB-4	1420	1,32	59,0	466	47,0	2									
	23	23,31	3	4	100LB-4	1420	1,76	60,9	451	45,6	2									
			4	5,5	112M-4	1420	1,32	60,9	602	60,7	2									
			5	6,8	112MB-4	1450	1,06	62,2	737	74,3	2									
	20	21,27	4	5,5	112M-4	1420	1,49	66,8	549	55,4	2									
			5	6,8	112MB-4	1450	1,19	68,2	672	67,8	2									
	15	14,83	5	6,8	112MB-4	1450	1,61	97,8	469	47,3	2									
	13	13,54	5,5	7,5	132S-4	1450	1,73	107,1	471	47,5	2									
			7,5	10	132M-4	1450	1,27	107,1	642	64,8	2									
			9,2	12,5	132MB-4	1450	1,04	107,1	788	79,5	2									
	10	9,96	7,5	10	132M-4	1450	1,53	145,6	472	47,7	2									
			9,2	12,5	132MB-4	1450	1,25	145,6	579	58,5	2									
			11	15	132MC-4	1460	1,05	146,6	688	69,4	2									
	7	6,65	7,5	10	132M-4	1450	1,59	218,0	315	31,8	2									
			9,2	12,5	132MB-4	1450	1,29	218,0	387	39,0	2									
			11	15	132MC-4	1460	1,08	219,5	459	46,3	2									
	5	4,78	9,2	12,5	132MB-4	1450	1,37	303,3	278	28,1	2									
			11	15	132MC-4	1460	1,14	305,4	330	33,3	2									
	4	4,03	9,2	12,5	132MB-4	1450	1,56	359,8	234	23,7	2									
			11	15	132MC-4	1460	1,31	362,3	278	28,1	2									
50 2500Nm	120	117,17	1,5	2	112M-8	710	1,33	6,1	2222	224,2	3									
			2,2	3	112M-6	950	1,27	8,1	2436	245,8	3									
			2,2	3	100LA-4	1420	1,80	12,1	1630	164,4	3									
			3	4	100LB-4	1420	1,32	12,1	2222	224,2	3									
			4	5,5	112M-4	1420	0,99	12,1	2963	298,9	3									
	110	107,20	1,5	2	112M-8	710	1,33	6,6	2033	205,1	3									
			2,2	3	112M-6	950	1,27	8,9	2229	224,8	3									
			2,2	3	100LA-4	1420	1,80	13,2	1491	150,4	3									
			3	4	100LB-4	1420	1,32	13,2	2033	205,1	3									
			4	5,5	112M-4	1420	0,99	13,2	2711	273,5	3									
	100	100,70	1,5	2	112M-8	710	1,33	7,1	1910	192,7	3									
			2,2	3	112M-6	950	1,27	9,4	2093	211,2	3									
			2,2	3	100LA-4	1420	1,80	14,1	1401	141,3	3									
			3	4	100LB-4	1420	1,32	14,1	1910	192,7	3									
			4	5,5	112M-4	1420	0,99	14,1	2546	256,9	3									
	90	92,13	1,5	2	112M-8	710	1,55	7,7	1747	176,3	3									
			2,2	3	112M-6	950	1,48	10,3	1915	193,2	3									
			3	4	100LB-4	1420	1,54	15,4	1747	176,3	3									
			4	5,5	112M-4	1420	1,16	15,4	2330	235,1	3									
	80	80,06	4	5,5	112M-4	1420	1,65	17,7	2025	204,3	3									
			5	6,8	112MB-4	1450	1,32	18,1	2478	250,0	3									

PERFORMANCE TABLE 50-60



ROBUS	rated ratio i:	real ratio i:	input power P_{n1} kW	Hp	motore	n_1 [rpm]	fs	output P_{n2} n_2 [rpm]	M_2[Nm]	M_2[Kgm]	stages	input connection **B5** IEC 72-1: 63	71	80	90	100/112	132	160	180	200
50 2500Nm	80	80,06	5,5	7,5	132S-4	1450	1,20	18,1	2726	275,0	3									
	70	72,13	4	5,5	112M-4	1420	1,65	19,7	1824	184,0	3									
			5	6,8	112MB-4	1450	1,32	20,1	2233	225,3	3									
			5,5	7,5	132S-4	1450	1,20	20,1	2456	247,8	3									
	60	61,99	4	5,5	112M-4	1420	1,82	22,9	1568	158,2	3									
			5	6,8	112MB-4	1450	1,46	23,4	1919	193,6	3									
			5,5	7,5	132S-4	1450	1,32	23,4	2111	213,0	3									
	55	57,74	4	5,5	112M-4	1420	1,72	24,6	1460	147,3	3									
			5	6,8	112MB-4	1450	1,38	25,1	1787	180,3	3									
			5,5	7,5	132S-4	1450	1,25	25,1	1966	198,4	3									
	50	50,35	4	5,5	112M-4	1420	1,75	28,2	1273	128,5	3									
			5	6,8	112MB-4	1450	1,40	28,8	1559	157,3	3									
			5,5	7,5	132S-4	1450	1,27	28,8	1714	173,0	3									
	45	45,12	5,5	7,5	132S-4	1450	1,49	32,1	1536	155,0	3									
			7,5	10	132M-4	1450	1,09	32,1	2095	211,4	3									
	40	38,78	5,5	7,5	132S-4	1450	1,54	37,4	1320	133,2	3									
			7,5	10	132M-4	1450	1,13	37,4	1801	181,7	3									
	35	34,47	7,5	10	132M-4	1450	1,50	42,1	1601	161,5	3									
			9,2	12,5	132MB-4	1450	1,22	42,1	1963	198,1	3									
			11	15	132MC-4	1460	1,02	42,4	2331	235,2	3									
	30	29,90	7,5	10	132M-4	1450	1,55	48,5	1388	140,1	3									
			9,2	12,5	132MB-4	1450	1,27	48,5	1703	171,8	3									
			11	15	132MC-4	1460	1,06	48,8	2022	204,0	3									
	25	27,50	7,5	10	132M-4	1450	1,53	52,7	1277	128,8	3									
			9,2	12,5	132MB-4	1450	1,25	52,7	1566	158,0	3									
			11	15	132MC-4	1460	1,05	53,1	1860	187,7	3									
	20	21,56	11	15	132MC-4	1460	1,60	67,7	1458	147,1	3									
	23	22,83	4	5,5	112M-4	1420	1,49	62,2	590	59,5	2									
			5	6,8	112MB-4	1450	1,19	63,5	722	72,8	2									
	20	19,83	5,5	7,5	132S-4	1450	1,68	73,1	690	69,6	2									
			7,5	10	132M-4	1450	1,23	73,1	940	94,9	2									
			9,2	12,5	132MB-4	1450	1,01	73,1	1153	116,4	2									
	18	18,15	5,5	7,5	132S-4	1450	1,88	79,9	631	63,7	2									
			7,5	10	132M-4	1450	1,38	79,9	861	86,8	2									
			9,2	12,5	132MB-4	1450	1,12	79,9	1056	106,5	2									
	15	15,29	11	15	160M-4	1460	1,46	95,5	1056	106,6	2									
			15	20	160L-4	1460	1,07	95,5	1440	145,3	2									
	10	10,37	15	20	160L-4	1460	1,83	140,8	977	98,5	2									
			18,5	25	180M-4	1470	1,48	141,8	1196	120,7	2									
			22	30	180L-4	1470	1,24	141,8	1423	143,6	2									
	8	8,03	18,5	25	180M-4	1470	1,50	183,1	926	93,5	2									
			22	30	180L-4	1470	1,26	183,1	1102	111,2	2									
	5	5,02	18,5	25	180M-4	1470	1,70	292,8	579	58,4	2									
			22	30	180L-4	1470	1,43	292,8	689	69,5	2									
	4	4,06	22	30	180L-4	1470	1,73	362,1	557	56,2	2									
60 4300Nm	120	115,43	3	4,0	132M-8	720	1,24	6,2	4318	435,6	3									
			4	5,5	132MA-6	970	1,19	8,4	4273	431,1	3									
			4	5,5	112M-4	1420	1,65	12,3	2919	294,5	3									
			5,5	7,5	132S-4	1450	1,20	12,6	3930	396,6	3									
	110	111,72	3	4,0	132M-8	720	1,24	6,4	4179	421,6	3									
			4	5,5	132MA-6	970	1,19	8,7	4136	417,3	3									
			4	5,5	112M-4	1420	1,65	12,7	2825	285,0	3									
			5,5	7,5	132S-4	1450	1,20	13,0	3804	383,8	3									
	100	101,79	3	4,0	132M-8	720	1,24	7,1	3807	384,1	3									
			4	5,5	132MA-6	970	1,19	9,5	3768	380,2	3									
			4	5,5	112M-4	1420	1,65	14,0	2574	259,7	3									
			5,5	7,5	132S-4	1450	1,20	14,2	3466	349,7	3									

PERFORMANCE TABLE 60



ROBUS	rated ratio i:	real ratio i:	input power P_{n1} kW	Hp	motore	n_1 [rpm]	fs	output P_{n2} n_2 [rpm]	M_2[Nm]	M_2[Kgm]	stages	input connection **B5** IEC 72-1: 63	71	80	90	100/112	132	160	180	200
60 4300Nm	90	89,28	4	5,5	112M-4	1420	1,65	15,9	2258	227,8	3									
			5,5	7,5	132S-4	1450	1,20	16,2	3040	306,7	3									
	80	81,51	5,5	7,5	132S-4	1450	1,80	17,8	2775	280,0	3									
			7,5	10	132M-4	1450	1,32	17,8	3785	381,9	3									
			9,2	12,5	132MB-4	1450	1,08	17,8	4643	468,4	3									
	70	69,95	5,5	7,5	132S-4	1450	1,80	20,7	2382	240,3	3									
			7,5	10	132M-4	1450	1,32	20,7	3248	327,7	3									
			9,2	12,5	132MB-4	1450	1,08	20,7	3984	402,0	3									
	60	60,82	5,5	7,5	132S-4	1450	1,80	23,8	2071	208,9	3									
			7,5	10	132M-4	1450	1,32	23,8	2824	284,9	3									
			9,2	12,5	132MB-4	1450	1,08	23,8	3464	349,5	3									
	55	55,42	7,5	10	132M-4	1450	1,76	26,2	2573	259,6	3									
			9,2	12,5	132MB-4	1450	1,44	26,2	3157	318,5	3									
			11	15	160M-4	1460	1,20	26,3	3748	378,2	3									
	50	48,03	9,2	12,5	132MB-4	1450	1,62	30,2	2736	276,0	3									
			11	15	160M-4	1460	1,36	30,4	3249	327,7	3									
			15	20	160L-4	1460	1,00	30,4	4430	446,9	3									
	45	44,72	11	15	160M-4	1460	1,48	32,6	3025	305,2	3									
			15	20	160L-4	1460	1,08	32,6	4125	416,1	3									
	40	38,36	11	15	160M-4	1460	1,80	38,1	2594	261,8	3									
			15	20	160L-4	1460	1,32	38,1	3538	356,9	3									
			18,5	25	180M-4	1470	1,07	38,3	4334	437,2	3									
	35	35,72	11	15	160M-4	1460	1,90	40,9	2416	243,7	3									
			15	20	160L-4	1460	1,39	40,9	3294	332,4	3									
			18,5	25	180M-4	1470	1,13	41,2	4035	407,2	3									
	30	28,33	18,5	25	180M-4	1470	1,59	51,9	3201	322,9	3									
			22	30	180L-4	1470	1,34	51,9	3806	384,0	3									
	25	24,63	18,5	25	180M-4	1470	1,68	59,7	2783	280,7	3									
			22	30	180L-4	1470	1,41	59,7	3309	333,9	3									
	20	19,69	22	30	180L-4	1470	1,98	74,7	2645	266,9	3									
			30	40	200L-4	1480	1,46	75,2	3659	369,2	3									
	15	15,32	22	30	180L-4	1470	2,10	96,0	2058	207,7	3									
			30	40	200L-4	1480	1,54	96,6	2847	287,2	3									
	23	22,96	5,5	7,5	132S-4	1450	1,54	63,2	798	80,6	2									
			7,5	10	132M-4	1450	1,13	63,2	1089	109,8	2									
	20	20,92	5,5	7,5	132S-4	1450	1,71	69,3	727	73,4	2									
			7,5	10	132M-4	1450	1,25	69,3	992	100,1	2									
	17	16,75	7,5	10	132M-4	1450	2,12	86,6	794	80,1	2									
			11	15	160M-4	1460	1,44	87,2	1157	116,7	2									
			15	20	160L-4	1460	1,06	87,2	1578	159,2	2									
	15	15,26	11	15	160M-4	1460	1,80	95,7	1054	106,3	2									
			15	20	160L-4	1460	1,32	95,7	1437	145,0	2									
			18,5	25	180M-4	1470	1,07	96,3	1761	177,6	2									
	13	13,38	18,5	25	180M-4	1470	1,54	109,9	1544	155,8	2									
			22	30	180L-4	1470	1,29	109,9	1836	185,2	2									
	10	9,74	18,5	25	180M-4	1470	2,47	150,9	1124	113,4	2									
			22	30	180L-4	1470	2,07	150,9	1336	134,8	2									
			30	40	200L-4	1480	1,52	152,0	1810	182,6	2									
	7	7,34	18,5	25	180M-4	1470	2,57	200,3	847	85,4	2									
			22	30	180L-4	1470	2,16	200,3	1007	101,6	2									
			30	40	200L-4	1480	1,59	201,6	1364	137,6	2									
	5	5,42	18,5	25	180M-4	1470	2,65	271,2	625	63,1	2									
			22	30	180L-4	1470	2,23	271,2	744	75,0	2									
			30	40	200L-4	1480	1,63	273,1	1007	101,6	2									
	4	4,00	18,5	25	180M-4	1470	3,51	367,5	462	46,6	2									
			22	30	180L-4	1470	2,95	367,5	549	55,4	2									
			30	40	200L-4	1480	2,17	370,0	743	75,0	2									

WEIGHTS





Weights including oil in Kg

input		ROBUSA-2		ROBUS25		ROBUS30		ROBUS35		ROBUS40		ROBUS50		ROBUS60	
		2	3	2	3	2	3	2	3	2	3	2	3	2	3
63 B14	UNV	5,1	5,9	-	-	-	-	-	-	-	-	-	-	-	-
71 B14		5,2	6,0	-	-	-	-	-	-	-	-	-	-	-	-
80B14		5,4	6,2	-	-	-	-	-	-	-	-	-	-	-	-
63/71 B5		-	-	12,8	13,4	22,2	23,4	32,0	33,5	-	-	-	-	-	-
80/90 B5		-	-	13,7	14,3	23,4	24,2	32,5	34,2	39,4	41,7	74,0	78,6	-	-
100/112 B5		-	-	-	-	24,7	25,7	34,2	35,7	40,9	43,1	75,1	82,9	135,8	141,2
132 B5		-	-	-	-	-	-	-	-	47,3	49,6	87,5	92,0	136,9	142,3
160 B5		-	-	-	-	-	-	-	-	-	-	89,9	-	139,3	144,3
180 B5		-	-	-	-	-	-	-	-	-	-	-	-	139,0	144,4
63 B14	FSW	5,5	6,3	-	-	-	-	-	-	-	-	-	-	-	-
71 B14		5,6	6,4	-	-	-	-	-	-	-	-	-	-	-	-
80 B14		5,8	6,6	-	-	-	-	-	-	-	-	-	-	-	-
63/71 B5		-	-	14,7	15,3	25,8	27,0	37,2	38,7	-	-	-	-	-	-
80/90 B5		-	-	15,6	16,2	27,0	27,8	37,7	39,4	45,9	48,2	88,0	92,6	-	-
100/112 B5		-	-			28,3	29,3	39,4	40,9	47,4	49,6	89,1	96,9	164,8	170,2
132 B5		-	-	-	-	-	-	-	-	53,8	56,1	101,5	106,0	165,9	171,3
160 B5		-	-	-	-	-	-	-	-	-	-	103,9	-	168,3	173,3
180 B5		-	-	-	-	-	-	-	-	-	-	-	-	168,0	173,4
63 B14	FBF	-	-	-	-	-	-	-	-	-	-	-	-	-	-
71B14		-	-	-	-	-	-	-	-	-	-	-	-	-	-
80 B14		-	-	-	-	-	-	-	-	-	-	-	-	-	-
63/71 B5		-	-	15,6	16,2	26,6	27,8	39,5	41,0	-	-	-	-	-	-
80/90 B5		-	-	16,4	17,1	27,8	28,6	40,0	41,7	49,7	52,0	95,7	100,3	-	-
100/112 B5		-	-	-	-	29,1	30,1	41,7	43,2	51,2	53,4	96,8	104,6	162,2	167,6
132 B5		-	-	-	-	-	-	-	-	57,6	59,9	109,2	113,7	163,3	168,7
160 B5		-	-	-	-	-	-	-	-	-	-	111,6	-	165,7	170,7
180 B5		-	-	-	-	-	-	-	-	-	-	-	-	165,4	170,8

120 56B5		=UNV+0,2													
140 63B5		=UNV+0,25													
160 71B5				=UNV+0,9		=UNV+0,9									
200 80/90B5				=UNV+1,7		=UNV+1,7		=UNV+1,8							
250 100/112B5								=UNV+3,8		=UNV+4,1					
300 132B5										=UNV+7,2		=UNV+5,8			
350 160/180B5												=UNV+9,8		=UNV+8,9	
450 200B5														=UNV+19,9	

DIMENSIONS

ROBUS	motor type		Nm	Mm	Pm	Sm	Dm	tm	bm	PAM	L (MF)	B	D1	f	b1	t1
A2	63	B14	60	75	90	M6	11	12,8	4	212,5	257,0	40	16	M6x16	5	18
	71	B14	70	85	105	M7	14	16,3	5	212,5	254,0					
	80	B14	80	100	120		19	21,8	6	227,0	271,5					
25	63	B5	95	115	140	M8	11	12,8	4	273,0	318,5	40	19	M6x16	6	21,5
	71	B5	110	130	160		14	16,3	5							
	80	B5	130	165	200	M10	19	21,8	6	274,0						
	90	B5				M10	24	27,3	8							
	100/112	B5	180	215	250	M12	28	31,3	8	367,0	411,5					
30	71	B5	110	130	160	M8	14	16,3	5	317,6	362,1	40	19	M6x16	6	21,5
	80	B5	130	165	200	M10	19	21,8	6	326,6	370,6					
	90	B5				M10	24	27,3	8							
	100/112	B5	180	215	250	M12	28	31,3	8	327,6	371,1					
35	71	B5	110	130	160	M8	14	16,3	5	357,0	409,5	50	24	M8x25	8	27
	80	B5	130	165	200	M10	19	21,8	6	366,0	420,0					
	90	B5				M10	24	27,3	8							
	100/112	B5	180	215	250	M12	28	31,3	8	367,0						
40	80	B5	130	165	200	M10	19	21,8	6	396,5	440,5	40	19	M6x16	6	21,5
	90	B5				M10	24	27,3	8							
	100/112	B5	180	215	250	M12	28	31,3	8	398,5						
	132	B5	230	265	300		38	41,3	12	410,5	454,5					
	80										450,5	50	24	M8x25	8	27
	90															
	100/112															
	132										464,5					
50	90	B5	130	165	200	M10	24	27,3	8	447,0	494,5	40	19	M6x16	6	21,5
	100/112	B5	180	215	250	M12	28	31,3	8	450,0						
	132	B5	230	265	300		38	41,3	12	520,0	564,0					
	160	B5	250	300	350	M16	42	45,3	12							
	90										514,5	60	28	M10x25.5	8	31
	100/112															
	132										584,0					
	160															
60	100/112	B5	180	215	250	M12	28	31,3	8	567,4	620,4	50	24	M8x25	8	27
	132	B5	230	265	300		38	41,3	12	585,6	638,6					
	160	B5	250	300	350	M16	42	45,3	12							
	180	B5				M16	48	51,8	14							
	200	B5	300	350	400	M20	55	59,3	16							
	100/112										630,4	60	28	M10x25.5	8	31
	132										648,6					
	160															
	180															
	200															

MF kit

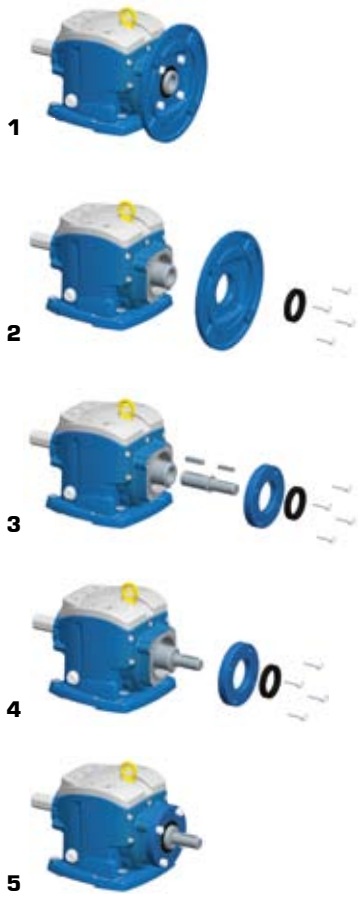

You can download 2D and 3D drawings from www.motive.it

PAM

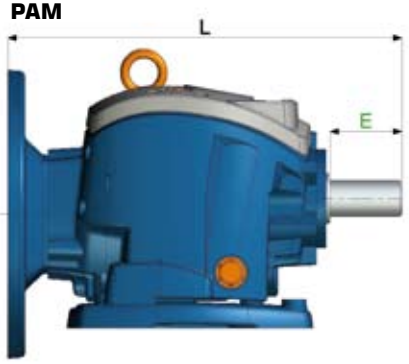

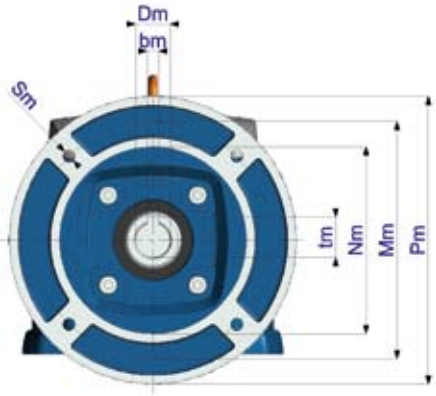

MF

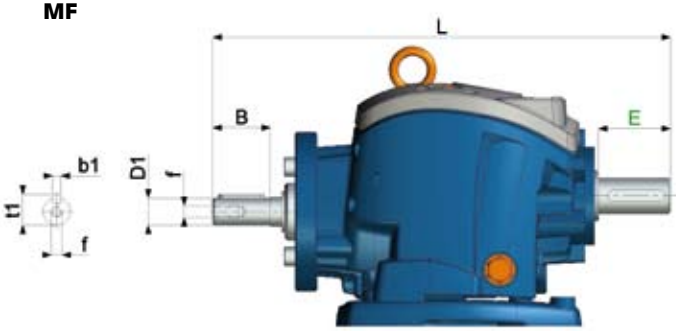



DIMENSIONS

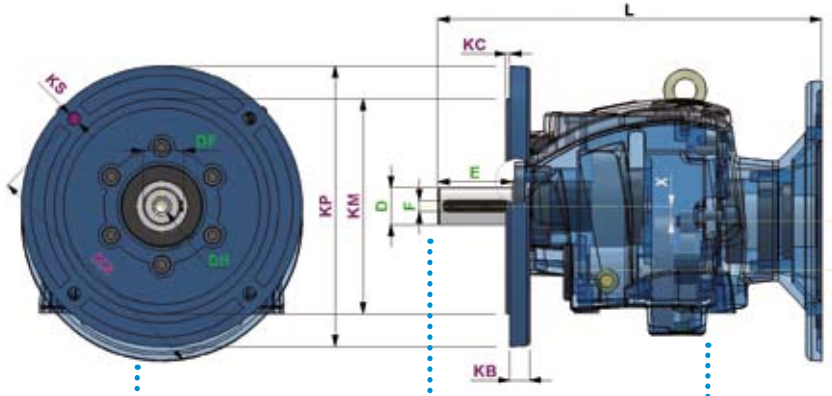

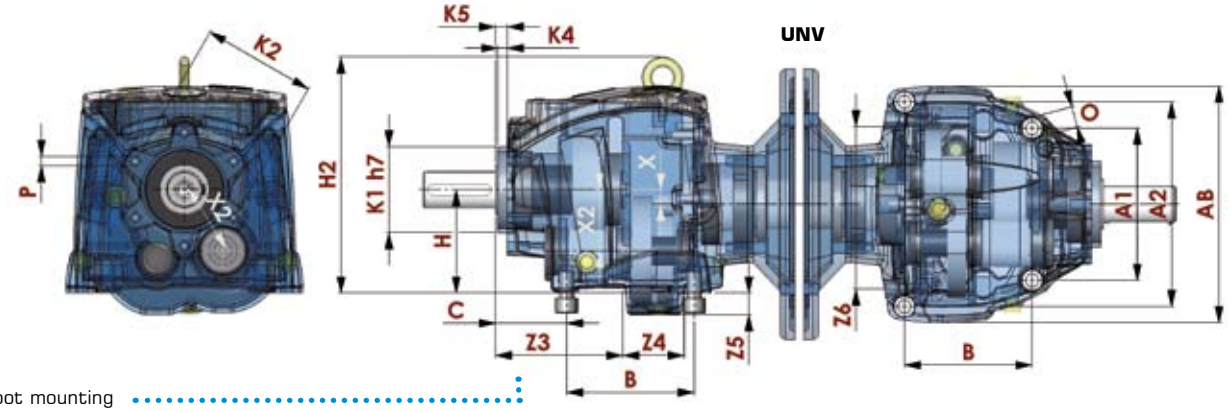

flange mounting

output shaft

foot mounting

ROBUS	IEC	KP	KM	KN	KS	KC	KB	D	E	F	DF	DH	X	X2
25	80/90B5	200	130	165	11	3,5	12	25 (k6)	50	8	28	M10x20L	11	52,5
	71B5	160	110	130	9	3,5	10	30 (k6)	60	8	33	M10x20L		
30	80/90B5	200	130	165	11	3,5	12	30 (k6)	60	8	33	M10x20L	13,5	66
	71B5	160	110	130	9	3,5	10	35 (k6)	70	10	38	M10x20L		
35	100/112B5	250	180	215	13,5	4	15	35 (k6)	70	10	38	M12x24L	17	72
	80/90B5	200	130	165	11	4	12	40 (k6)	80	12	43	M16x32		
40	132B5	300	230	265	14	4	21	40 (k6)	80	12	43	M16x32	16	80
	100/112B5	250	180	215	14	4	19	50 (k6)	100	14	53,5	M16x32		
50	160/180B5	350	250	300	18	5	21	50 (k6)	100	14	53,5	M16x32	18	103
	132B5	300	230	265	14	4	19	60 (m6)	120	18	64	M20x40		
60	225B5	450	350	400	18	5	25	60 (m6)	120	18	64	M20x40	20	120
	160/180B5	350	250	300	18	5	21	70 (m6)	140	18	73,5	M20x40		

type	B	BA	A	AB	O	H	H2	C	P	K1	K2	K4	K5	Z1	Z2	Z3	Z4	Z5	Z6
SW	130	171,5	110	181	9	90	193,6	25	-	-	-	-	-	-	-	-	-	-	-
BF	107,5	173,8	130	180,5	9	100	203,5	18	-	-	-	-	-	-	-	-	-	-	-
UNV	90,6	-	A1= 108 A2= 145,2	170	M10	73,5	180	54,5	M6	68	80	6,5	9,5	45	44	95	84	17	128
SW	165	209	135	233	14	115	238,6	30	-	-	-	-	-	-	-	-	-	-	-
BF	130	213,5	160	229	14	120	243,5	18	-	-	-	-	-	-	-	-	-	-	-
UNV	115,8	-	A1= 138 A2= 185,6	215	M12	94	215	62,4	M8	80	94	5,5	8,4	56	55	115	95	22	155
SW	195	236,7	150	263,7	14	130	264	30	-	-	-	-	-	-	-	-	-	-	-
BF	149,5	246,8	180	269	14	140	274,5	19,5	-	-	-	-	-	-	-	-	-	-	-
UNV	131	-	A1= 156 A2= 210	243	M12	106	235	74	M10	90	110	7	13	63	57	135	105	20	168
SW	205	255	170	283,7	18	140	287	35	-	-	-	-	-	-	-	-	-	-	-
BF	156	266	225	290	18	155	302	25	-	-	-	-	-	-	-	-	-	-	-
UNV	141	-	A1= 168 A2= 226	262	M16	114	262	78,5	M12	95	125	10,5	13	69	66	140	65	27	190
SW	260	327,7	215	364,6	18	180	357	40	-	-	-	-	-	-	-	-	-	-	-
BF	180	336	250	372,5	18	195	372	25	-	-	-	-	-	-	-	-	-	-	-
UNV	181,3	-	A1= 216 A2= 290,6	336	M16	148	313	92	M12	132	155	11,5	16,5	91	83,5	170	98	32	250
SW	310	393	250	438	22	225	428	40	-	-	-	-	-	-	-	-	-	-	-
BF	165	394	300	437,5	22	217	421	25	-	-	-	-	-	-	-	-	-	-	-
UNV	217,6	-	A1= 259,2 A2= 348,7	405	M16	176	381	103	M12	154	180	14	18	105	105	185	120	43	295

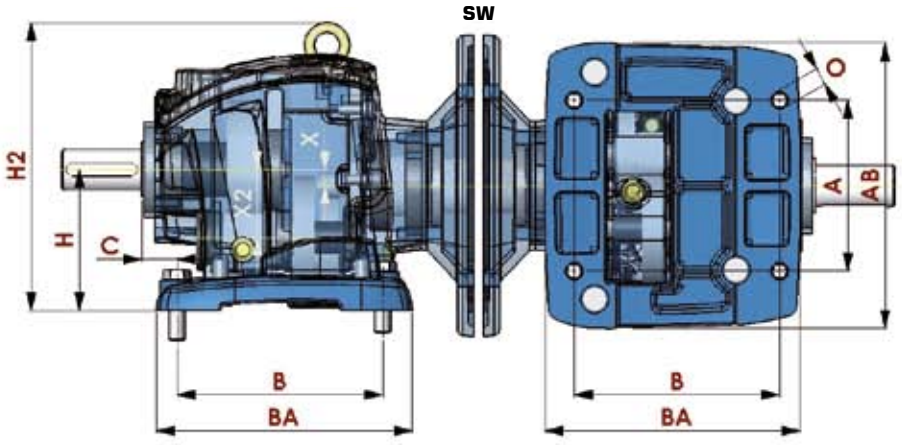

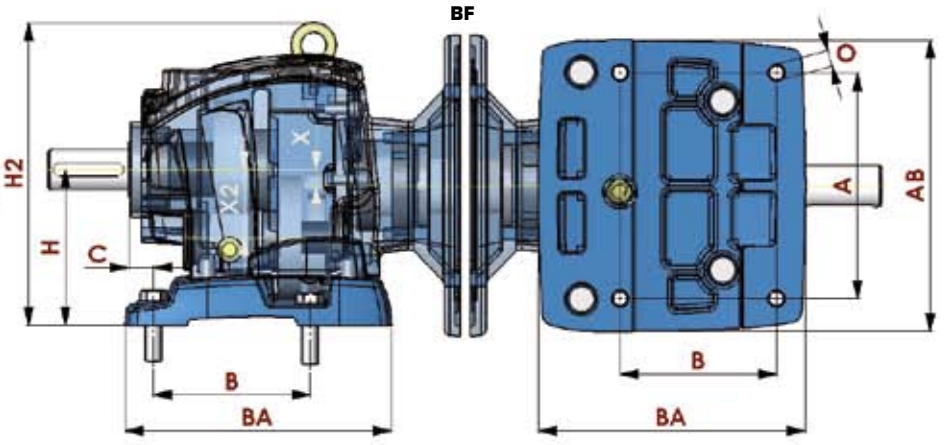

DIMENSIONS

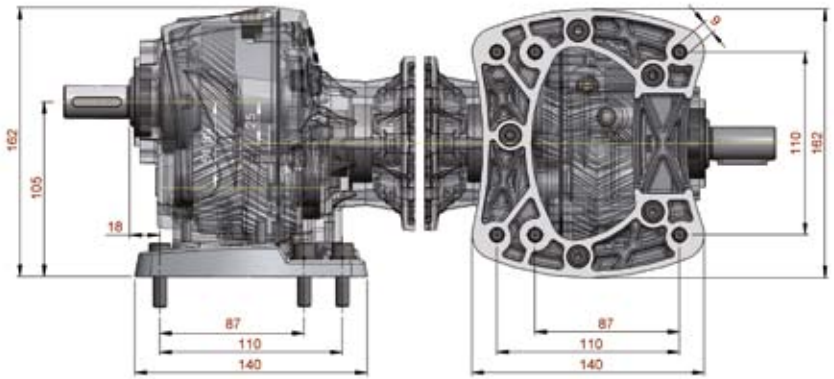



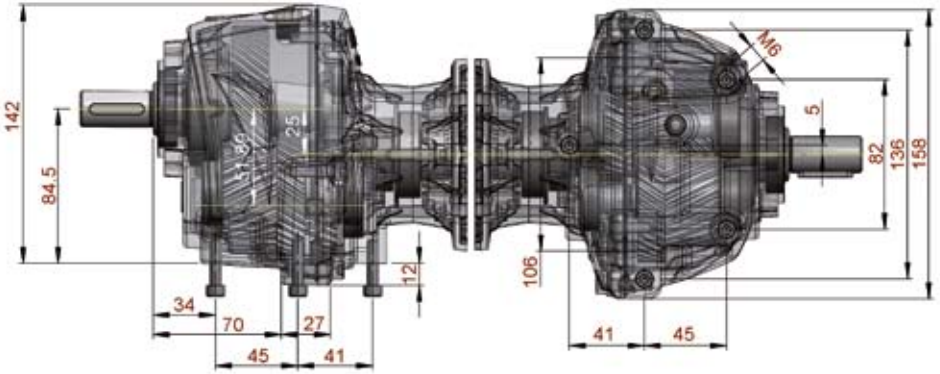

ROBUS	D	E	F	DF	DH
A2	20 (k6)	40	6	23	M5x12,5
	25 (k6)	50	8	28	M10x20L

ROBUS	IEC	KP	KM	KN	KS	KC	KB
A2	56B5	120	80	100	7	3	8
	63B5	140	95	115	10	3	9

ROBUS	motor type		Nm	Mm	Pm	Sm	Dm	tm	bm	L
A2	63	B14	60	75	90	M6	11	12,8	4	212,5
	71	B14	70	85	105	M7	14	16,3	5	212,5
	80	B14	80	100	120		19	21,8	6	227,0

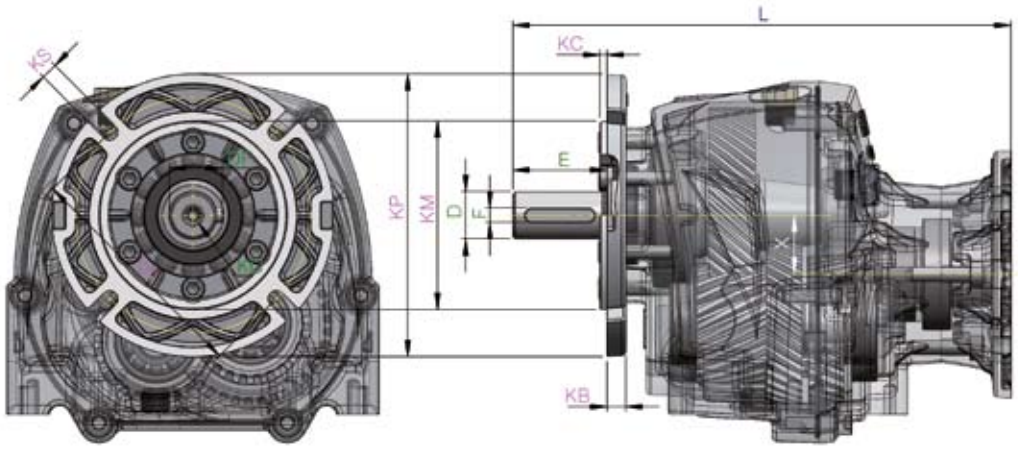

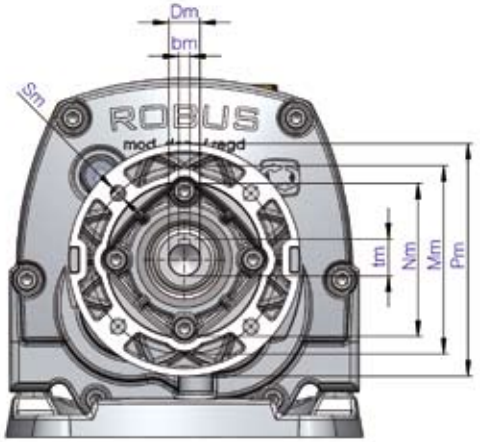

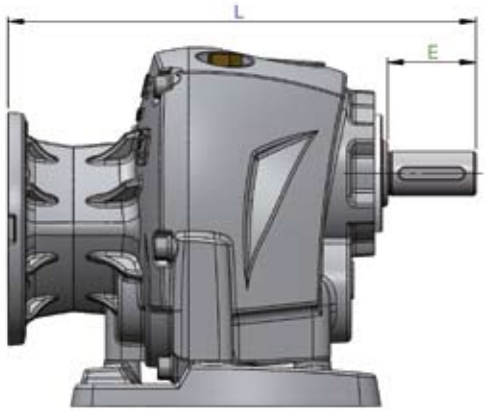

TERMS OF SALE AND GUARANTEE

ARTICLE 1
GUARANTEE

1.1 Barring written agreements, entered into between the parties hereto each time, Motive hereby guarantees compliance with specific agreements.
The guarantee for defects shall be restricted to product defects following design, materials or manufacturing defects leading back to Motive.
The guarantee shall not include:

* Faults or damages ensuing from transport. Faults or damages ensuing from installation defects; incompetent use of the product, or any other unsuitable use.
* Tampering or damages ensuing from use by non-authorised staff and/or use of non-original parts and/or spare parts;
* Defects and/or damages ensuing from chemical agents and/or atmospheric phenomena (e.g. burnt out material, etc.); routine maintenance and required action or checks;
* Products lacking a plate or having a tempered plate.

1.2 Returns to credit or replace will be accepted only in exceptional cases; however returns of goods already used to credit or replace won't be accepted in any case.
The guarantee shall be effective for all Motive products, with a term of validity of 12 months, starting from the date of shipment.
The guarantee shall be subject to specific written request for Motive to take action, according to statements, as described at the paragraphs herein below. By virtue of aforesaid approval, and as regards the claim, Motive shall be bound at its discretion, and within a reasonable time-limit, to alternatively take the following actions:
a) To supply the Buyer with products of the same type and quality as those having proven defective and not complying with agreements, free ex-works; in aforesaid case, Motive shall have the right to request, at Buyer's charge, early return of defective goods, which shall become Motive's property;
b) To repair, at its charge , the defective product or to modify the product which does not comply with agreements, by performing aforesaid action at its facilities; in aforesaid cases, all costs regarding product transport shall be sustained by the Buyer.
c) To send spare parts free of charge: all costs regarding product transport shall be sustained by the Buyer.

1.3. The guarantee herein shall assimilate and replace legal guarantees for defects and discrepancies, and shall exclude any other eventual Motive liability, however caused by supplied products; in particular, the Buyer shall have no right to submit any further claims.
Motive shall not be liable for the enforcement of any further claims, as of the date the guarantee's term of validity expires.

ARTICLE 2
CLAIMS

2.1. Claims, regarding quantity, weight, gross weight and colour, or claims regarding faults and defects in quality or compliance, and which the Buyer may discover on goods delivery, shall be submitted by a max. 7 days of aforesaid discovery, under penalty of nullity.

ARTICLE 3
DELIVERY

3.1. Any liability for damages ensuing from total or partial delayed or failed delivery, shall be excluded.

3.2. Unless differently communicated by written to the Client, the transport terms have to be intended ex-works.

ARTICLE 4
PAYMENT

4.1. Any delayed or irregular payments shall entitle Motive to cancel ongoing agreement, including agreements which do not regard the payments at issue, as well as entitling Motive to claim damages, if any. Motive shall, however, have the right, as of payment's due date and without placing in arrears, to claim interest for arrears, to the extent of the discount rate in force in Italy, increased by 12 points. Motive shall also have the right to withhold material under repair for replacement. In the case of failed payment, Motive shall have the right to cancel all guarantees of materials, as regards the insolvent Client.

4.2. The Buyer shall be bound to complete payment, including cases whereby claims or disputes are underway.

ALL DATA HAVE BEEN WRITTEN AND CHECKED WITH THE GREATEST CARE.
WE DO NOT TAKE ANY RESPONSIBILITY FOR POSSIBLE ERRORS OR OMISSIONS.
MOTIVE CAN CHANGE THE CHARACTERISTIC OF THE SOLD ITEMS ON HIS FIRM OPINION AND IN EVERY MOMENT.

You can download each motor or gearbox final test report from www.motive.it, starting from its serial number





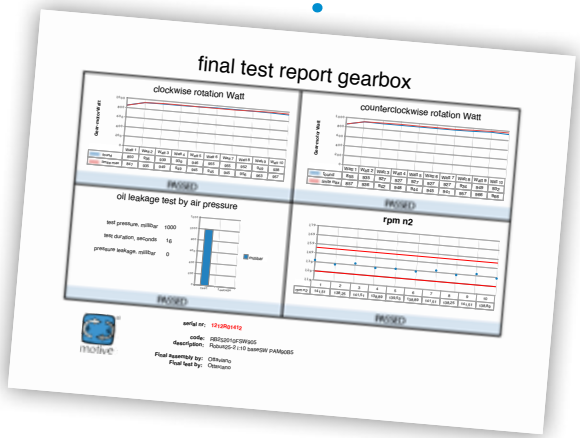



ASK OUR FURTHER CATALOGUES:





LOOKS GOOD, PERFORMS BETTER

ROBUS TECHNICAL CATALOGUE ENG AGO /13 REV.04

AREA DISTRIBUTOR

Motive s.r.l.
Via Le Ghiselle, 20
25014 Castenedolo (BS) - Italy
Tel.: +39.030.2677087 - Fax: +39.030.2677125
web site: www.motive.it
e-mail: motive@e-motive.it