DELPHI SERIES THREE-PHASE ELECTRIC MOTORS

ASYNCHRONOUS

motive®

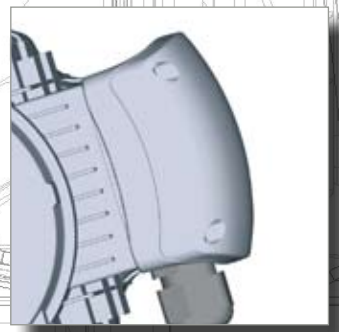








ZERTIFIKAT ◆ CERTIFICATE ◆ 認証證書 ◆ СЕРТИФИКАТ ◆ CERTIFICADO ◆ CERTIFICAT

TÜV SÜD Italia

CERTIFICATO

Nr 50 100 1185 - Rev. 07

Si attesta che / This is to certify that

IL SISTEMA QUALITÀ DI
THE QUALITY SYSTEM OF

motive

MOTIVE S.r.l.

SEDE LEGALE E OPERATIVA:
REGISTERED OFFICE AND OPERATIONAL SITE:

VIA LE GHISELLE 20
I-25014 CASTENEDOLO (BS)

È CONFORME AI REQUISITI DELLA NORMA
HAS BEEN FOUND TO COMPLY WITH THE REQUIREMENTS OF

UNI EN ISO 9001:2008

QUESTO CERTIFICATO È VALIDO PER IL SEGUENTE CAMPO DI APPLICAZIONE
THIS CERTIFICATE IS VALID FOR THE FOLLOWING SCOPE

Progettazione e fabbricazione di motori elettrici, riduttori meccanici e inverter per la trasmissione di potenza (IAF 19, 18)
Design and manufacture of electrical motors, mechanical reducers and inverter for power transmissions (IAF 19, 18)

ACCREDIA

Per l'Organismo di Certificazione
For the Certification Body
TÜV Italia S.r.l.

Validità / Validity
Dal / From: 2013-03-02
Al / To: 2016-03-02

Data emissione / Printing Date
2013-05-06

Paolo Merenda
Direttore Direzione Management Service

PRIMA CERTIFICAZIONE / FIRST CERTIFICATION: 2001-07-20

TÜV Italia S.r.l. • Gruppo TÜV SÜD • Via Carducci 125, Pal. 23 • 20099 Sesto San Giovanni (MI) • Italia • www.tuv.it

VISIT AND KNOW MOTIVE THANKS TO THE MOVIE ON WWW.MOTIVE.IT



INDEX

Technical characteristics pag. 4-5



Efficiency pag. 6-7



CE Marking
Delphi EX pag. 8

Protection Type pag. 9
Duty Service

Working conditions
Assisted power cooling
Encorder pag. 10



Motive motors protection pag. 11

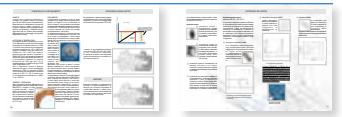

Wiring diagrams pag. 12-13

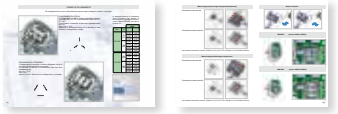

Three-phase self-braking
motors series atdc delphi pag. 14

Delphi AT pag. 15

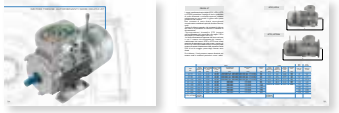

Brake description
Brake operation
Adjustment pag. 16-17



Manual release/IP/ braking surface
micro-switches to detect brake position
Power supply pag. 18

Power supply pag. 19



Power supply pag. 20

Motor configurations and
installation positions pag. 21



Table of dimensions pag. 22-23

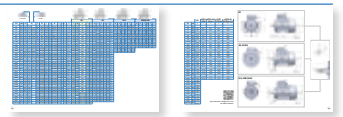

Technical data pag. 24-25



Technical data pag. 26-27

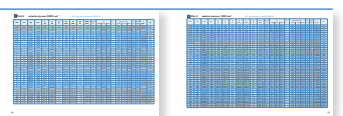

Technical data pag. 28-29

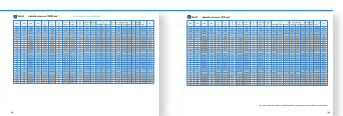

Technical data pag. 30-31

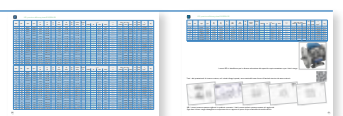

Components list pag. 32

Rubber seal rings
and bearings pag. 33



Terms of sale
and guarantee pag. 34



TECHNICAL CHARACTERISTICS

Motive motors are built according to international standard regulations; each size throughout the construction forms is calculated with reference to the tables of standard IEC 72-1.

Motive asynchronous three-phase delphi series motors are closed, and externally ventilated.
The frame, up to 132 included, is made in die casting aluminium alloy, from size 160 up to 355 the frame is made in cast iron.

All motors are
- multiple voltage
- multi-frequency 50/60Hz,
- F class insulation, (H on request)
- S1 continuous duty service,
- IP55 protection (IP56, 66, 67, and 68 on request)
- IE2 or IE3 efficiency class (IEC 60034-30)
- tropicalized winding
- suitable for inverter power supply

IE2, high efficiency class IE 60034-30
IE3, premium efficiency class IE 60034-30

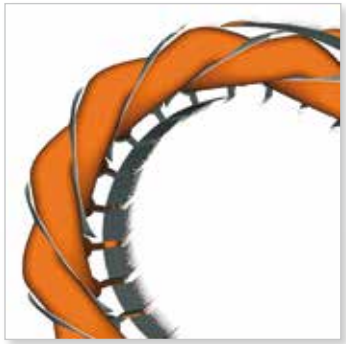

The copper is impregnated with a double layer of H class insulating enamel to ensure high resistance to electrical, thermal and mechanical stress.
The phases are further isolated by another layer of Nomex film to protect the motors from the voltage peaks that usually occur when the motor is controlled by an inverter.





motive motors adopt only bearings selected for their silence and reliability and, for the same objectives, the cage rotor is dynamically balanced according to IEC 34-14 and ISO 8821 norms

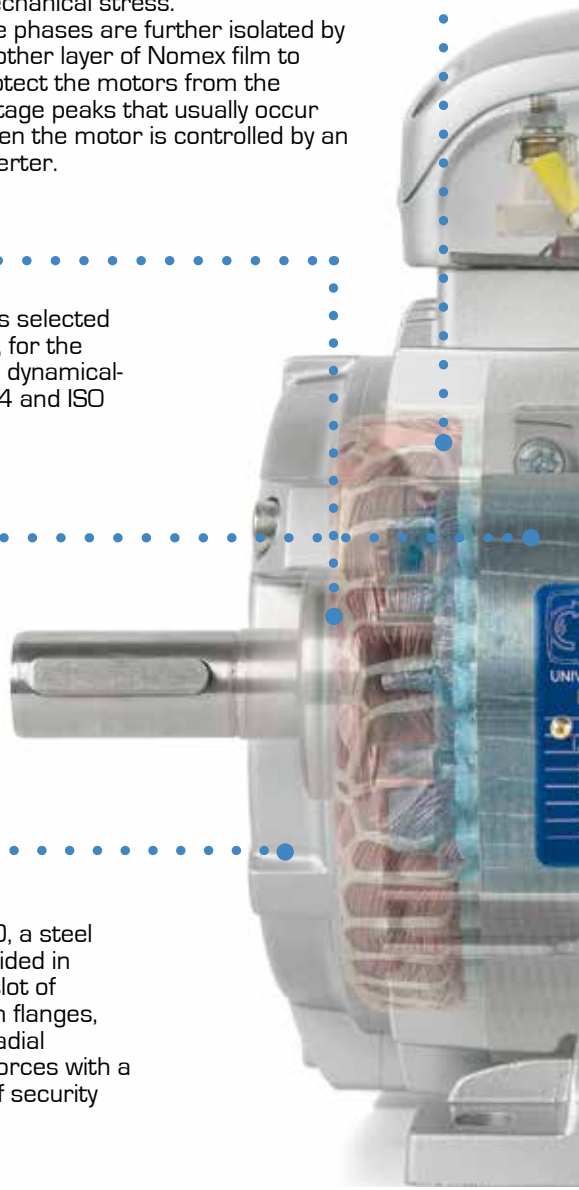





From type 90, a steel insert is provided in the bearing slot of the aluminum flanges, to resist to radial mechanical forces with a fair degree of security

REGISTERED DESIGN

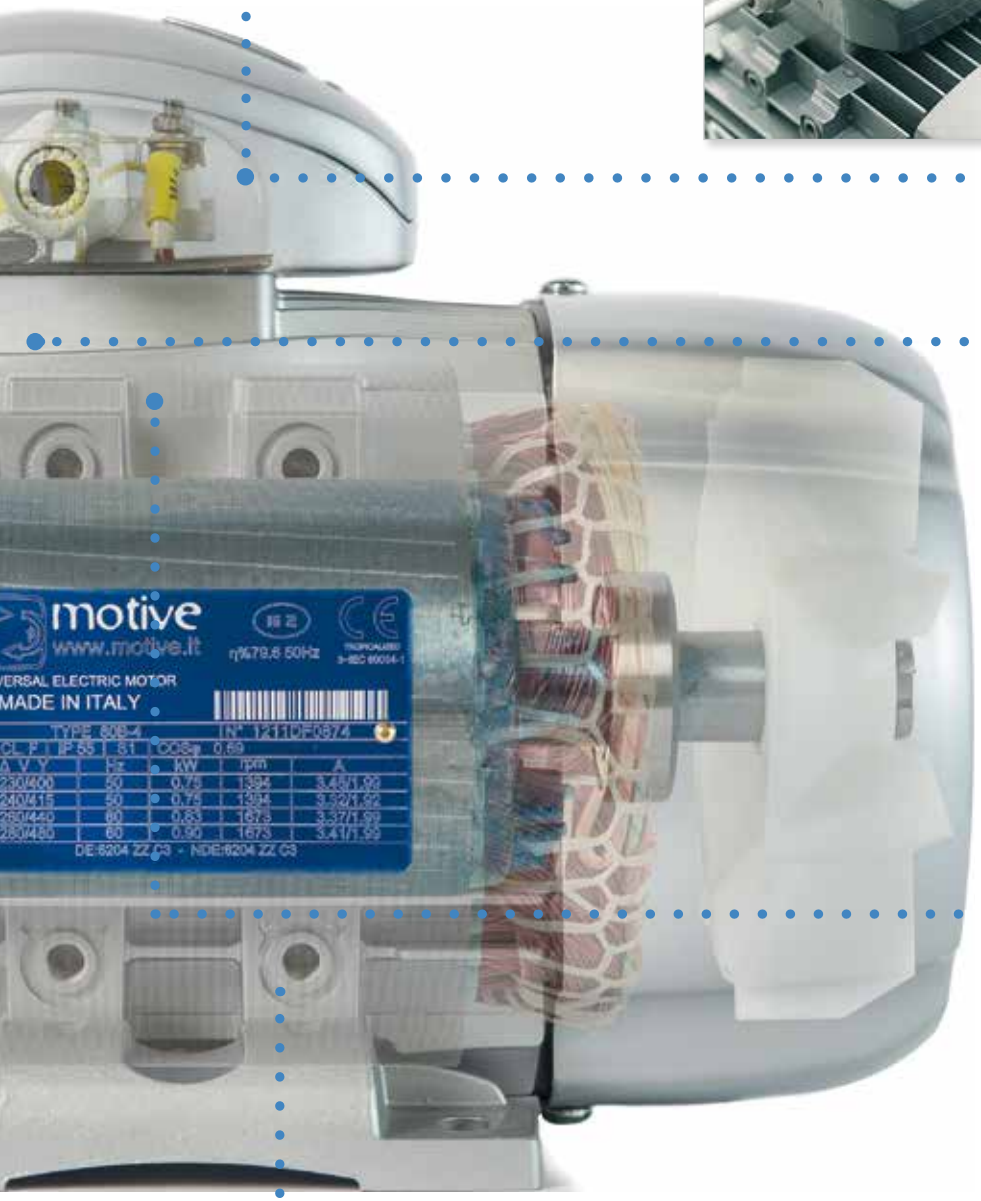



Aiming the maximum protection, the motors are equipped with important details like the pull-resistant cable gland and the combination of bearings with two shields each with rubber seal rings



Cable gland can be easily moved on both the sides of the connection box, thanks to the screw cap



The connection box can be rotated of 360° with steps of 90°



To protect them by the rust, motive motors are painted in silver RAL9006 colour

From size 160 and up, due to the high torque, the motors are fixed by feet that are die-casted with the iron frame

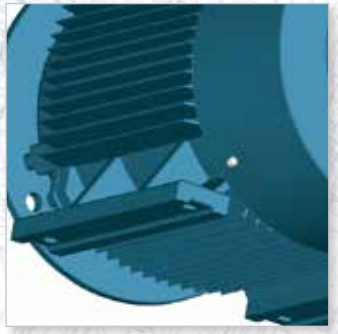



Performance excellence is granted by the low loss CRNO "FeV" magnetic laminations adoption,instead then the usual Semi Processed/Decarb "FeP01". FeV laminations provide higher efficiency, lower heating, energy saving and longer life to insulation materials

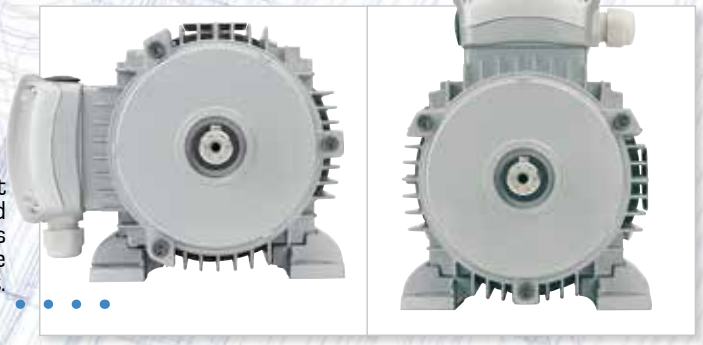

From size 56 to size 132, feet are detachable, and can be fixed on 3 sides of the housing, thus permittig the terminal box to be positioned up, right or left.

Worldwide there are several classification systems of induction motors efficiencies. In order to create a common system, IEC (International Electrotechnical Commission) issued in October 2008 the norm IEC 60034-30 "Rotating electrical machines – Part 30: Efficiency classes of single-speed, three-phase, cage-induction motors (IE-code)". It's a classification sytem of efficiency that replaces the CEMEP one (to be clear, the one of "Eff.1, Eff.2, ed Eff.3" motors) and that, furthermore, recalls a new measuring and calculation way of efficiency, the one of the norm IEC 60034-2-1 (Rotating electrical machines – Part 2-1: Standard methods for determining losses and efficiency from tests), of September 2007.

In Europe it's a step ahead in the application of the Eco-design Directive for Energy-related Products (ErP) 2009/125/EC. It's based on such a normative picture and on the Regulation (EC) nr 640/2009 of 22 July 2009 that:
- From June 2011, the motors with efficiency lower than IE-2 have been forbidden
- From 2015, the minimum efficiency for motors from 7,5 to 375kW will be l'IE-3, and
- From 2017, the obligation of IE-3 will be extended to the motors from 0,75kW to 5,5kW

IEC classification and CEMEP classification

KW	Hp	efficiency classes IEC 60034-30:2008 (at 50Hz)									efficiency classes CEMEP voluntary agreement					
		IE-1 standard efficiency			IE-2 high efficiency			IE-3 premium efficiency			Eff.3		Eff.2		Eff.1	
		2 poles	4 poles	6 poles	2 poles	4 poles	6 poles	2 poles	4 poles	6 poles	2 poles	4 poles	2 poles	4 poles	2 poles	4 poles
0,75	1	72,1	72,1	70,0	77,4	79,6	75,9	80,7	82,5	78,9	-	-	-	-	-	-
1,1	1,5	75,0	75,0	72,9	79,6	81,4	78,1	82,7	84,1	81,0	<76,2	<76,2	≥76,2	≥76,2	>82,8	>83,8
1,5	2	77,2	77,2	75,2	81,3	82,8	79,8	84,2	85,3	82,5	<78,5	<78,5	≥78,5	≥78,5	>84,1	>85,0
2,2	3	79,7	79,7	77,7	83,2	84,3	81,8	85,9	86,7	84,3	<81,0	<81,0	≥81,0	≥81,0	>85,6	>86,4
3	4	81,5	81,5	79,7	84,6	85,5	83,3	87,1	87,7	85,6	<82,6	<82,6	≥82,6	≥82,6	>86,7	>87,4
4	5,5	83,1	83,1	81,4	85,8	86,6	84,6	88,1	88,6	86,8	<84,2	<84,2	≥84,2	≥84,2	>87,6	>88,3
5,5	7,5	84,7	84,7	83,1	87,0	87,7	86,0	89,2	89,6	88,0	<85,7	<85,7	≥85,7	≥85,7	>88,6	>89,2
7,5	10	86,0	86,0	84,7	88,1	88,7	87,2	90,1	90,4	89,1	<87,0	<87,0	≥87,0	≥87,0	>89,5	>90,1
11	15	87,6	87,6	86,5	89,4	89,8	88,7	91,2	91,4	90,3	<88,4	<88,4	≥88,4	≥88,4	>90,5	>91,0
15	20	88,7	88,7	87,7	90,3	90,6	89,7	91,9	92,3	91,2	<89,4	<89,4	≥89,4	≥89,4	>91,3	>91,8
18,5	25	89,3	89,3	88,6	90,9	91,2	90,4	92,4	92,6	91,7	<90,0	<90,0	≥90,0	≥90,0	>91,8	>92,2
22	30	89,9	89,9	89,2	91,3	91,6	90,9	92,7	93,0	92,2	<90,5	<90,5	≥90,5	≥90,5	>92,2	>92,6
30	40	90,7	90,7	90,2	92,0	92,3	91,7	93,3	93,6	92,9	<91,4	<91,4	≥91,4	≥91,4	>92,9	>93,2
37	50	91,2	91,2	90,8	92,5	92,7	92,2	93,7	93,9	93,3	<92,0	<92,0	≥92,0	≥92,0	>93,3	>93,6
45	60	91,7	91,7	91,4	92,9	93,1	92,7	94,0	94,2	93,7	<92,5	<92,5	≥92,5	≥92,5	>93,7	>93,9
55	75	92,1	92,1	91,9	93,2	93,5	93,1	94,3	94,6	94,1	<93,0	<93,0	≥93,0	≥93,0	>94,0	>94,2
75	100	92,7	92,7	92,6	93,8	94,0	93,7	94,7	95,0	94,6	<93,6	<93,6	≥93,6	≥93,6	>94,6	>94,7
90	120	93,0	93,0	92,9	94,1	94,2	94,0	95,0	95,2	94,9	<93,9	<93,9	≥93,9	≥93,9	>95,0	>95,0
110	150	93,3	93,3	93,3	94,3	94,5	94,3	95,2	95,4	95,1	-	-	-	-	-	-
132	180	93,5	93,5	93,5	94,6	94,7	94,6	95,4	95,6	95,4	-	-	-	-	-	-
160	220	93,8	93,8	93,8	94,8	94,9	94,8	95,6	95,8	95,6	-	-	-	-	-	-
200	270	94,0	94,0	94,0	95,0	95,1	95,0	95,8	96,0	95,8	-	-	-	-	-	-
250	335	94,0	94,0	94,0	95,0	95,1	95,0	95,8	96,0	95,8	-	-	-	-	-	-
315	423	94,0	94,0	94,0	95,0	95,1	95,0	95,8	96,0	95,8	-	-	-	-	-	-
355	483	94,0	94,0	94,0	95,0	95,1	95,0	95,8	96,0	95,8	-	-	-	-	-	-

The following chart tries to synthesize a comparison between yesterday and today.

EFFICIENCY >>	world IEC 600034-30	Europe (50Hz) CEMEP	USA (60HZ) Epact	Further classification
	IE-3 premium efficiency		Identical to NEMA Premium efficiency	AS in Australia NBR in Brasile BG/T in China IS in India JIS in Japan MEPS in Korea
	IE-2 high efficiency	comparable to Eff.1	Identical to NEMA energy efficiency/EPACT	
	IE-1 standard efficiency	comparable to Eff.2		

In our field, we list 5 main changes in Europe :
- The classification is now extended to 6 poles motors
- The powers range is wider
- In a direct comparison between Eff.2" and "IE-1" or between "Eff.1" and "IE-2" , we find that the first, the CEMEP values, are higher, but this is also a consequence of the
- Change in the measurement and calculation system of such values, that must now be made with the method of the new norm IEC 60034-2-1:2007, and
- Introduction of the IE3 "Premium efficiency" level.

Nevertheless, local legislations of some Countries inside and outside Europe, and the specific requirements of some associations, maintain often incentivized or even compulsory those motors called "Eff.1" according to the CEMEP system.

What did Motive do in this scenario?
- The measuring and calculation system of Motive motors efficiency is conform to the norm 60034-2-1:2007. That's the one behind the data declared in the probative test-reports uploaded in motive web-site (each declared data, we remind it, is in fact supported, detailed and proven by such test reports)
- This, together with the fact that Eff.2 Motive motors were often offering an efficiency abundantly above the min allowed level, permitted us to reach easily IE2 efficiency with a two years long R&D plan before June 2011. From June 2011, IE1 motors are not produced anymore.
- IE3 "premium efficiency" motors are also available.
- The testing system, test reports, and data truth of Motive motors has been certified by IMQ, the main Italian certification body for electrical appliances. The same, in fact, in September 2008 has firstly inspected

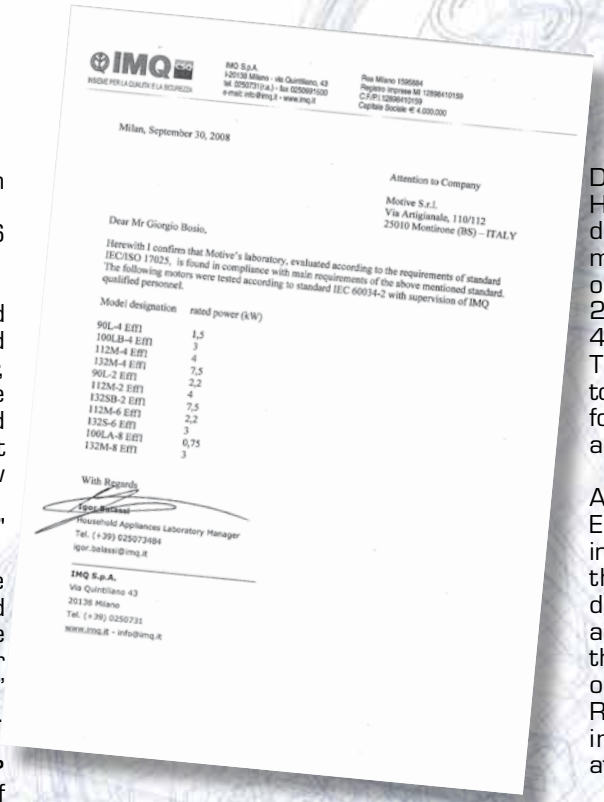
IMQ

IMQ S.p.A.
I-20138 Milano - via Quintiliano, 43
tel. 0250731(r.a.) - fax 0250991500
e-mail: info@imq.it - www.imq.it

Rea Milano 1595684
Registro Imprese MI 12896410159
C.F./P.I. 12896410159
Capitale Sociale € 4.000.000

Milan, September 30, 2008

Attention to Company

Motive S.r.l.
Via Artigianale, 110/112
25010 Montirone (BS) – ITALY

Dear Mr Giorgio Bosio,

Herewith I confirm that Motive's laboratory, evaluated according to the requirements of standard IEC/ISO 17025, is found in compliance with main requirements of the above mentioned standard. The following motors were tested according to standard IEC 60034-2 with supervision of IMQ qualified personnel.

Model designation	rated power (kW)
90L-4 Eff1	1,5
100LB-4 Eff1	3
112M-4 Eff1	4
132M-4 Eff1	7,5
90L-2 Eff1	2,2
112M-2 Eff1	4
132SB-2 Eff1	7,5
112M-6 Eff1	2,2
132S-6 Eff1	3
100LA-8 Eff1	0,75
132M-8 Eff1	3

With Regards,

Igor Belassi
Household Appliances Laboratory Manager
Tel. (+39) 025073484
igor.belassi@imq.it

IMQ S.p.A.
Via Quintiliano 43
20138 Milano
Tel. (+39) 0250731
www.imq.it - info@imq.it

and qualified our internal laboratory according to the norm IEC/ISO17025, and then supervised the internal tests on a sampling list of Eff.1 motors, including some 6 and 8 poles in order to enclose further values that, out of CEMEP classifications, were already established by some Countries laws.

Clients benefits are of many kinds: B I L L EFFECTS
The purchase cost of a motor is about 2-3% of the total costs of its life. The balance is energy consumption costs. Comparing Eff.1 motors to Eff.2, the purchase price difference is recovered in about one year of energy saving. Of course, such period length depends by the specific motor, the use of it and the local energy costs of each Country. Motive can give you a tool in xls format to support you in this calculation.

DURABILITY EFFECTS
Higher efficiency motors heat less, slowing down the aging cycle of the insulating materials and living longer. Average operating life of Eff.2 motive motors is: 2500 hours/ year for motors up to 15kW 4000 hours/year for bigger motors. The average life is approximately from 25 to 30.000 hours for the first and 50,000 for the second ones. Eff.1 motors can live approx 40% longer than Eff.2 motors.

AMBIENT EFFECTS
Electric motors use 65% of all electricity in industry. Higher efficiency motors have the further objective of sustainable development, reduction of CO_2 emissions and consequent improvement of the quality of the atmosphere with an objective of sustainable development, Reduction of CO_2 emissions and consequent improvement of the quality of the atmosphere.

How to make a more efficient motor?
High efficiency can be seen in many ways: like the relation between output power and input absorbed power, or like a measure of the losses that born when converting the electric power in mechanical energy. From another perspective, high efficiency motors consume less energy to produce the same torque on the shaft. Basically, an high efficiency motor is the result of precise machining, lower frictions, a dynamically balanced rotor, smaller space between rotor and stator and of the use of better materials. The main factors for the design are based on the choice of the type of lamination sheets and windings with a greater turns number and a bigger diameter wire.
Among all materials that compose a motor, laminations have the highest influence on performance.

Motive motors are made with CRNO "FeV" magnetic lamination sheets, rather than the customary iron lamination sheets.
Further than raw material, the sheets thickness is another performance source .
In fact, the thinner is the sheet, the higher are the performances.
The Semi Processed/Decarb lamination sheets "Fe P01" can reach up to 1mm thickness.
FeV magnetic lamination sheets have a 0,5mm maximum thickness.
Composition and thickness give to magnetic lamination sheets a very low W/Kg loosing factor:
Lower specific losses mean less magnetising current for the same Power and torque (thus less heating).
Instead, no standard prescribes a maximum loosing factor for Fe P01 lamination sheets; not even this data can be guaranteed. This is a source of potential performance diversities between motor and motor.

The main advantages given by the adoption of silicon magnetic laminations are:
higher efficiency
better guarantees on the quality consistency, assured by tolerances reported in international norms.

CE MARKING

CE marking is referred to:

- Low Voltage 06/95 EEC
- EMC Electromagnetic Compatibility 04/108/EEC
- Eco-design Directive for Energy-related Products (ErP) 2009/125/EC

Note: The Machinery Directive (MD) 2006/42/EC excludes from its scope the electric motors (Art.1, comma 2)

CE marking is put by Motive as a visible sign of the product compliance with the requirements of above mentioned directives. In order to reach this conformity, Motive products respect the following product standards:

- EN 60034-1 (last issue). Rotating electrical machines. Part 1: rating and performance
- EN 60034-5 (last issue). Rotating electrical machines. Part 5: classification of degrees of protection
- EN 60034-6 (last issue). Rotating electrical machines. Part 6: methods of cooling (IC code)
- EN60034-7 Rotating Electrical Machines - Part 7: Classification of Types of Construction, Mounting Arrangements and Terminal Box Position (IM Code)
- EN60034-8 Rotating electrical machines–Part 8: Terminal markings and direction of rotation
- EN60034-2-1 (last issue). Rotating electrical machines. Standard methods for determining losses and efficiency from tests
- EN60034-30 (last issue). Rotating electrical machines - Part 30: Efficiency classes of single-speed, three-phase, cage-induction motors
- EN50347 General purpose three-phase induction motors having standard dimensions and outputs. Frame numbers 56 to 315 and flange numbers 65 to 740
- EN60335-1 Household and similar electrical appliances – Safety
- EN61000-6-4 Electromagnetic compatibility (EMC) - Part 6: Generic standards - Section 4: Emission standard for industrial environments
- EN 60034-9 (last issue). Rotating electrical machines. Part 9: noise limits


motive

Conformity Declaration

Motive s.r.l. whose Head Office is situated in Montirone (BS) - Italy

declares, under its own exclusive responsibility,

that its whole range of

asynchronous electric motors of the series "Delphi" from IECsize 56 to 400

is conform to the following international norms (last issue):

EN60034-1 Rotating Electrical Machines - Part 1: Rating and performance

EN60034-6 Rotating Electrical Machines - Part 6: Methods of cooling (IC code)

EN60034-7 Rotating Electrical Machines - Part 7: Classification of Types of Construction, Mounting Arrangements and Terminal Box Position (IM Code)

EN60034-8 Rotating electrical machines – Part 8: Terminal markings and direction of rotation

EN60034-2-1 Rotating electrical machines. Standard methods for determining losses and efficiency from tests

EN60034-30 Rotating electrical machines - Part 30: Efficiency classes of single-speed, three-phase, cage-induction motors

EN50347 General purpose three-phase induction motors having standard dimensions and outputs. Frame numbers 56 to 315 and flange numbers 65 to 740

EN60335-1 Household and similar electrical appliances – Safety

EN61000-6-4 Electromagnetic compatibility (EMC) - Part 6: Generic standards - Section 4: Emission standard for industrial environments

IEC 72-1 Dimensions and output series for rotating electrical machines Part 1: Frame numbers 56 to 400 and flange numbers 55 to 1080

following the provisions of the Directives

Low Voltage 06/95 EEC,
EMC Electromagnetic Compatibility 04/108/EEC
Eco-design Directive for Energy-related Products (ErP) 2009/125/EC

1 January 2011

The Legal Representative: Giorgio Bosio

SERIE DELPHI EX

Ex II 3 GD Ex nA T4
Ex tD A22 IP65 125°C

ATEX is the conventional name of the Directive 94/9/EC for the equipment intended for use in potentially explosive atmospheres. The name comes from the words ATmosphères and EXplosibles. It became compulsory in all the European Union from 1st March 1996, imposing the evaluation of the risk for all the equipment operating in such environments. It classifies several levels of "danger" (zones): to every zone it corresponds a different typology of explosive atmosphere, according to its composition and to its probability and time of appearance. The client is responsible of the choice of the right motor based on the criteria described in the norm EN 61241-14.


DNV - MODULO UNO

ATTESTATO DI ESAME DI TIPO

ATE.20.0001.10/0151

MOTORI ASINCRONI TRIFASE
Serie: DELPHI EX
MOTIVE s.r.l.

Motive delphi Ex motors are designed to be used in the zone 22 (II 3 D T125°') and/or zone 2 (II 3 G T125°'), according to the classification stated in the plate, and for the voltage and frequency field A described by the norm EN 60034 part 1 Cap. 6.3.

- EN60079-0 Electrical apparatus for explosive gas atmospheres - Part 0: General requirements
- EN60079-15 Electrical apparatus for explosive gas atmospheres - Part 15: Construction, test and marking of type of protection, "n" electrical apparatus
- EN60079-31 Explosive atmospheres Part 31: Equipment dust ignition protection by enclosure "t"
- EN50281-2-1 Electrical apparatus for use in the presence of combustible dust. Test methods. Methods of determining minimum ignition temperatures

PROTECTION TYPE

The protection against people accidental contacts and/or the entry of corps and/or the entry of water is expressed at international level (EN60529) by a symbolic acronym composed by a group of 2 letters and 2 numbers.

IP index of protection reference letters

1° num. Protection of people against contacts and protection against the entry of solid corps

2° num. Protection against harmful entry of water

Motive motors are IP55 protected

	1° number	2° number
0	no protection	no protection
1	protection against solid corps bigger than 50mm	protection against vertical water drops
2	protection against solid corps bigger than 12mm	protection against water drops fall up to 15° of inclination
3	protection against solid corps bigger than a 2,5mm	protection against water drops up to 60° of inclination
4	protection against solid corps bigger than 1 mm	protection against water sprayed by all directions
5	protection against harmful dust deposits	protection against water launched by a nozzle of 6,3mm D with a water capacity 12,5lt/min at a distance of maximum 3 mt for 3 min
6	complete protection against the total penetration of dust	protection against water projections similar to sea waves
7		protection from temporary submersion in water, up to 1 meter in depth
8		protection from extended periods of immersion, up to a specific depth

STANDARD
OPTIONAL
OPTIONAL
OPTIONAL



RAIN SHIELD OR CLEAN FLOW FAN COWL FOR TEXTILE INDUSTRY

For outdoor applications with V5 - V18 - V1 - V15 installation, we recommend to mount a rain shield. This configuration may also be used in textiles processing industry.

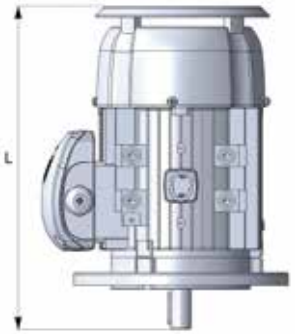

TYPE	L
63	215
71	323
80	369
90S	403
90L	428
100	469
112	453
132S	573
132M	613
160M	770
160L	825
180M	915
180L	955
200L	1025
225S	1155
225M	1160
250M	1220
280S	1265
280M	1315
315S	1540
315M	1570
315L	1680
355M	1840
355L	1870
400	2290



TOTAL SEALING

Resin coated stator is a safe solution to the presence of very strong humidity or aggressive environments (for instance, carwash systems or chemical plants). It offers also a lower heating thanks to the thermal dissipation capacity of the resin.

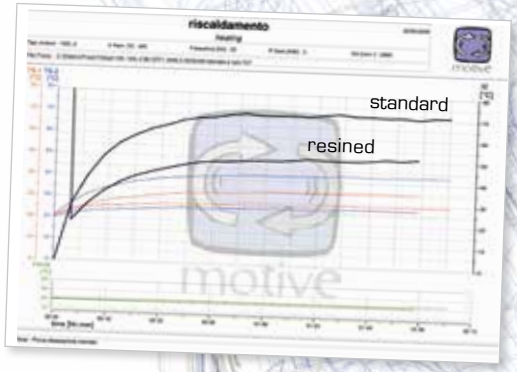

The ideal combination is the resin-filled terminal box. In this case, according to the customer needs, the terminal block can be partially immersed, or totally immersed in such insulating and protective resin. In alternative, the terminal box and block can be taken off and the motor frame be closed by a sealed plate from which a cable can come out.

Note: rotors are painted against oxidation as a standard

DUTY SERVICE

All Motive motors shown in this catalogue are made for S1 continuous duty service, as per IEC 34-1 norm. The duty service class is shown on the rating plate.
Below are described the various types of service:
S1 - Continuous service: operating at constant load of duration N in order to reach a thermal balance.

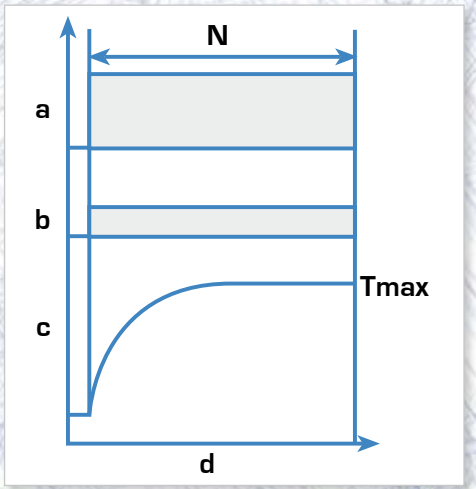

a = load
b = electric losses
c = temperature
d = time
N = steady load operating time
Tmax = max temperature achieved

S2 - Limited-duration service.
S3 - Periodic intermittent service.
S4 - Periodic intermittent service with start-up.
S5 - Periodic intermittent service with electric braking.
S6 - Uninterrupted periodic service with intermittent load.
S7 - Uninterrupted periodic service with electric braking.
S8 - Uninterrupted periodic service with correlated load and velocity variations.
S9 - Service with non-periodic variations in load and speed.

WORKING CONDITIONS

HUMIDITY:
The electrical equipment must be able to work with a relative humidity between 30 and 95% (without condensation). Damaging effects of occasional condensation must be avoided by adequate equipment design or, if necessary, by additional measures (for example, Motive offers anti-condensation heaters, drain holes, resin coated stators, and resin filled terminal boxes).

ALTITUDE AND TEMPERATURE:
the powers indicated are intended for regular use at altitudes below 1000 mt above sea level and a room temperature between +5°C and +40°C for motors having a rated power below 0.6 kW, or between -15°C and 40°C for motors having a rated power equal to or greater than 0.6 kW (IEC 34-1): For working conditions
rather than those specified (higher altitude and/or temperature) the power decreases of 10% each 10°C of higher temperature, and of 8% for each 1000 mt of higher altitude.
It is not necessary to reduce the rated power if at an altitude higher than 1000mt and lower than 2000mt there is a max ambient temperature of 30°C or, in altitudes from 2000 mt to 3000mt there is a max ambient temperature of 19°C.

VOLTAGE - FREQUENCY:
The admitted variation of supply voltage and frequency is established by the norm EN60034-1
Within this tolerance delphi motors provide the rated power reported in the plate.



INSULATION:
The copper is impregnated with a double layer of H class insulating enamel to ensure high resistance to electrical, thermal and mechanical stress.
A NOMEX film that wraps entirely around the coil side insulates the copper and iron from one another.
The phases are further isolated by another layer of NOMEX to protect the motors from voltage peaks that usually occur when the motor is controlled by inverter.

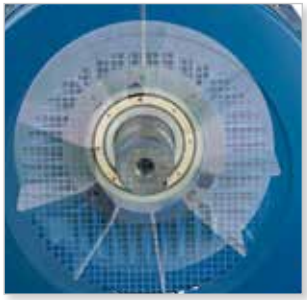

In case that motors with more than 75kW are controlled by inverter, we recommend to request the electrically insulated bearing on the non drive end.
Its purpose is to open the electric circuit between the rotor and the motor frame, thus preventing that the shaft currents go through the bearings and damage their balls surface and roll tracks.

The section "technical data" of this catalogue shows the max operating temperatures according to the Class insulation shown on the plate.

Delphi motors are designed to conserve wide margins against eventual overloads, having a temperature rise that is, at rated power, much lower than the operating temperature limit given by their insulation class. This fact increases considerably the motors life lenght. Such "ΔT" values are evidenced in the following performance charts. (see further details about temperature rise in the "technical data" section of this catalogue)

ASSISTED POWER COOLING

For application with a power supply at certain frequencies (see following graph), a power cooling system (IC-416) must be used.

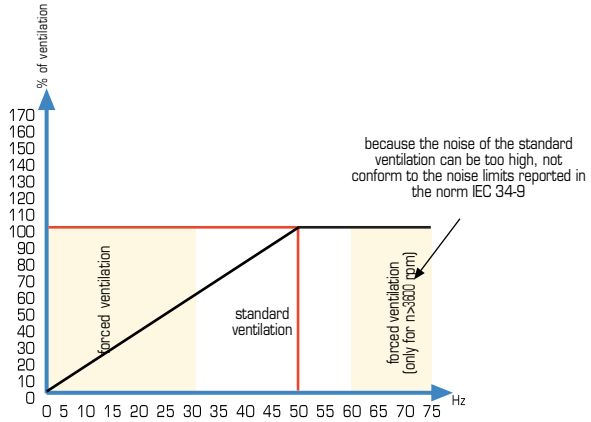

Motive power cooling systems are three-phase 400/50 400/60, IP 55, and with separate terminal box. Upon request, single phase and special voltage power cooling systems are also available.

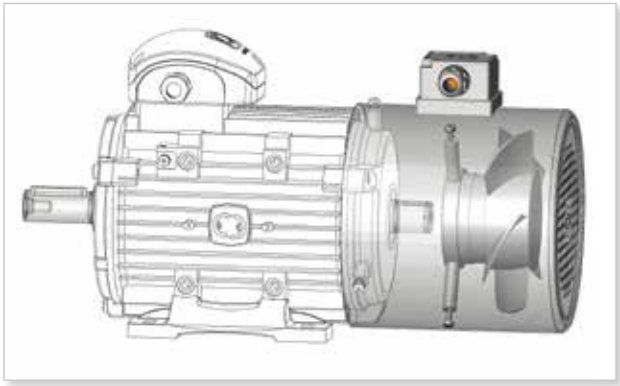

ENCODER

Motors with encoder or special shaft configurations for encoder mounting are available upon request. In this case, assisted power cooling is also available, supported by brackets on the fan cover

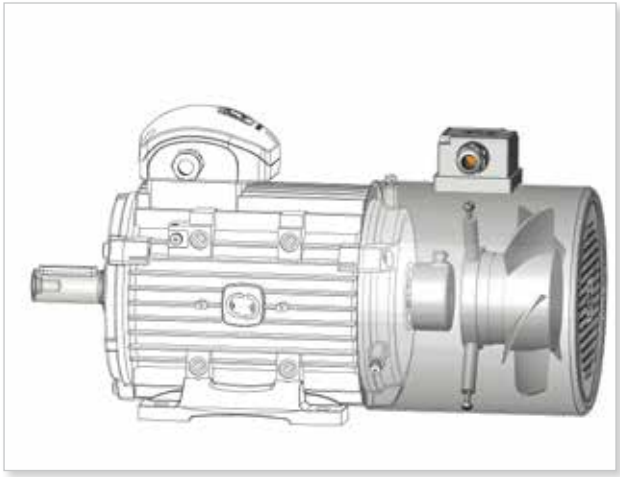

Protections must be chosen based on the specific running conditions, according to standards EN 60204-1

External protections

- Protection against overloads. A thermal cut-out relay, which automatically controls a knife switch.



- Protection against peak currents by magnetic relay that controls an automatic knife switch, or by fuses; these must be set to the locked rotor current.



- If the application requires, protection against excessive speed of the electric motor, for example if the mechanical load may drive the electric motor itself and thereby create a hazardous situation.

- If special conditions or synchronised operation with other machines or parts of machines require it, protection against power failures or dips by means of a minimum voltage relay that controls an automatic power knife switch.

Inner thermal overload cut-out switches (per CEI 2-3/IEC 34-1)

The electrical protections on the motor power line may not be sufficient to protect against overloads. If the cooling conditions worsen, the motor overheats but the electrical conditions do not change, which inhibits line protections. Installing built-in protections on the windings solves this problem:

- **bimetallic device "PTO"**

this is a normally-closed electromechanical device that opens when the threshold temperature is reached; it automatically resets when the temperature falls below the threshold level. Bimetallic devices are available with various intervention temperatures and without automatic reset, per EN 60204-1.



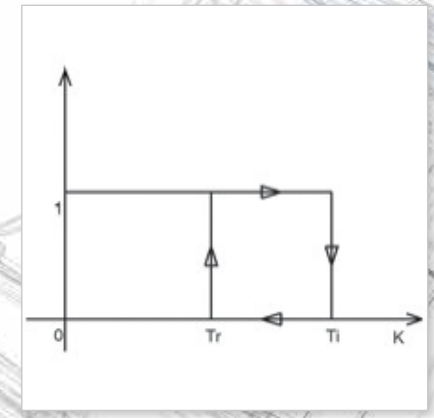

Tr= Opening temperature (motor stops)
Ti= Re-closing temperature (motor works again)

- **PTC thermistor device**

this device promptly, positively adjusts its resistance once the threshold temperature is reached.



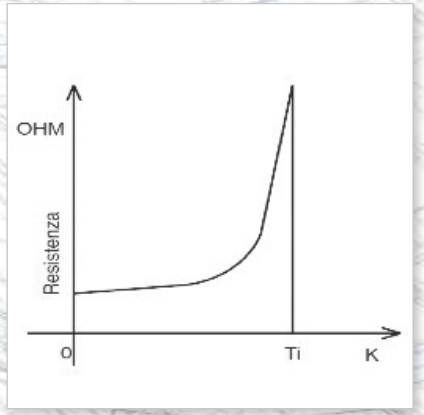

Ti= activating temperature

Motors "Delphi Ex - II 3G Ex nA" and all motors from type 160 to type 355L are equipped with 3 PTC thermistors in the winding, with temperature intervention of 120-130°C in Class F motors (standard) (150-160°C in H Class motors, not delphi Ex)

Types 160-400
Cable gland for PTC



- **PT100 device**



this is a device that continuously, increasingly adjusts its resistance according to the temperature. It is useful for constant measuring of the winding temperatures using electronic

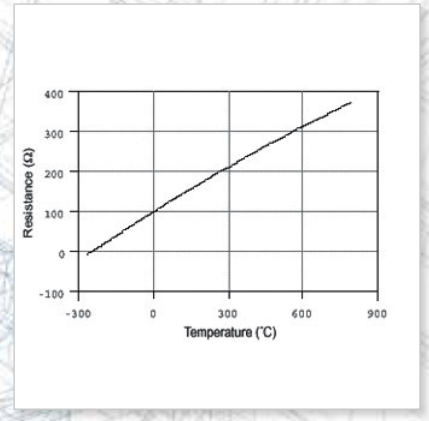

WIRING DIAGRAMS

Motive three phase motors can be connected “Star” or “Delta”.

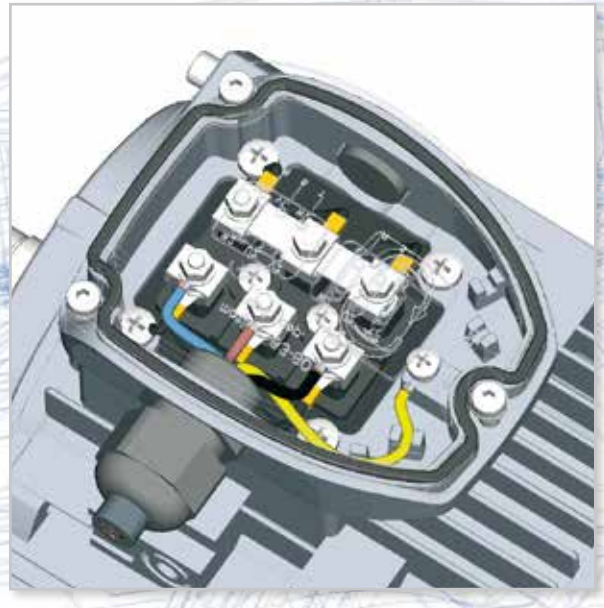

STAR CONNECTION
Star connection is obtained by connecting together the terminals W2, U2, V2 and supplying the terminals U1, V1, W1.
The phase current and voltage are respectively:
Iph = In
Uph = Un / 3 -2
where In is the supply line current and Un is the supply line voltage of Star connection

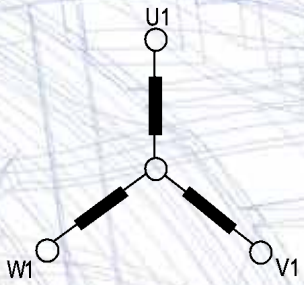

DELTA CONNECTION
Delta connection is obtained by connecting the end of a phase with the beginning of the following one. The phase current Iph and the phase voltage Uph are repectively:
Iph = In / 3 -2
Uph = Un
where In and Un are referred to Delta connection.

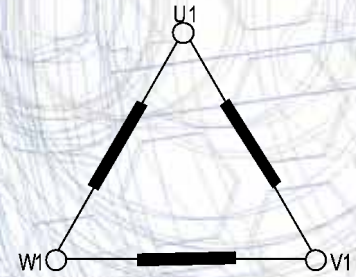

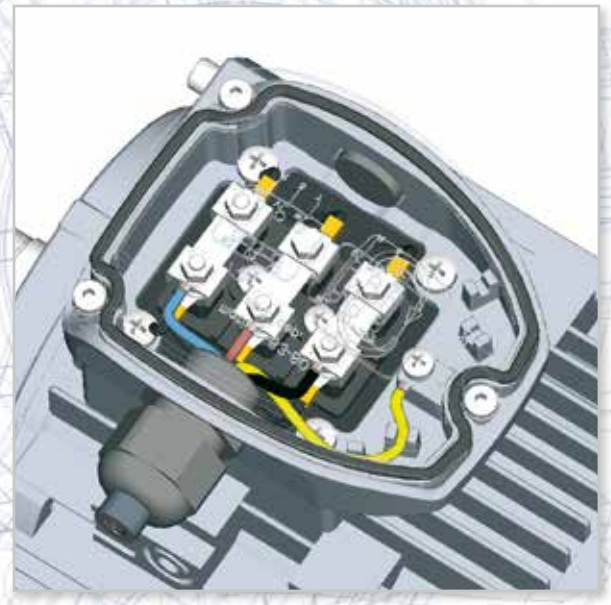

the following voltages and frequencies are inside the standard power supply of all three-phase motive motors, under S1 duty service:

		Volts	
Size	Hz	Δ	Y
56-132	50 ±5%	230	400
		220	380
		240	415
	60 ±5%	260	440
		220	380
		265	460
		280	480
132-355	50 ±5%	400	690
		380	660
		415	720
	60 ±5%	440	760
		380	660
		460	795
		480	830



Double polarity motor, single winding (dahlander)

High-speed connection



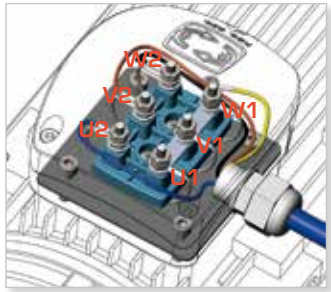

Low-speed connection

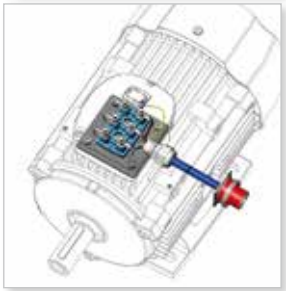

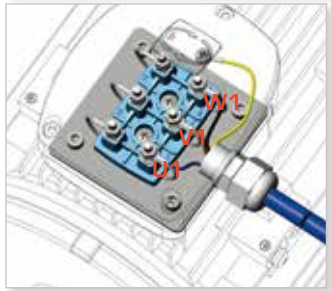

To use the 2 speeds, you must adopt a 6+1 wires cable and connect an external switch

Double polarity motor, with double winding

High-speed connection

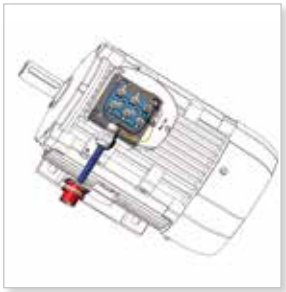

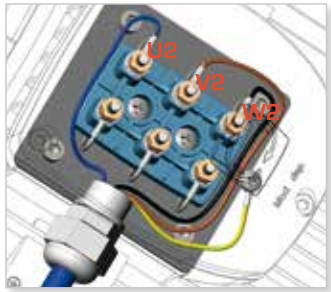

Low-speed connection

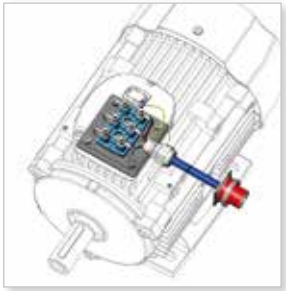

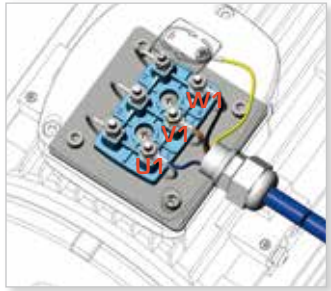

To use the 2 speeds, you must adopt a 6+1 wires cable and connect an external switch

Single phase motors

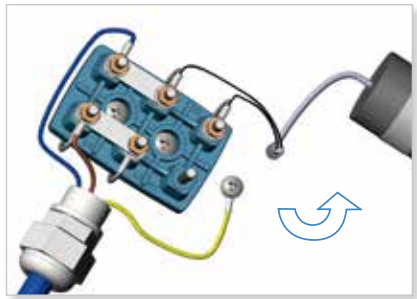

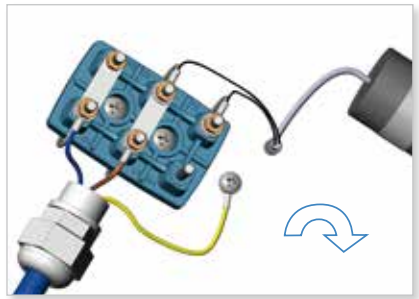

NEO-WiFi 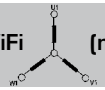 (motor 230VΔ/400VY)



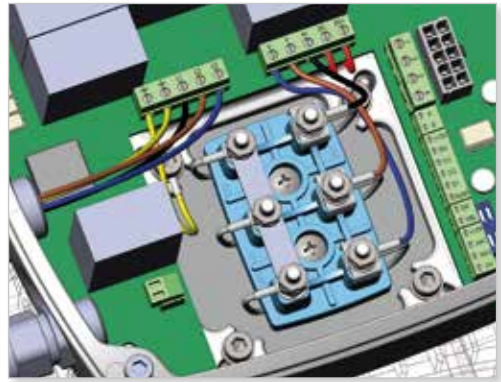

NEO-WiFi 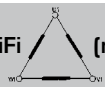 (motor 400VΔ/690VY)

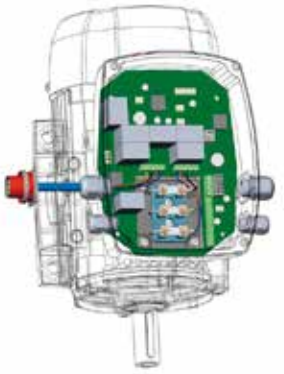

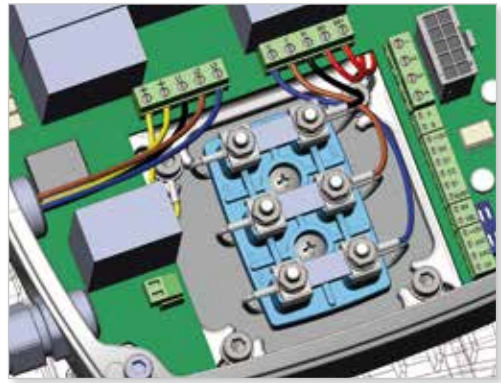

THREE-PHASE SELF-BRAKING MOTORS SERIES DELPHI AT

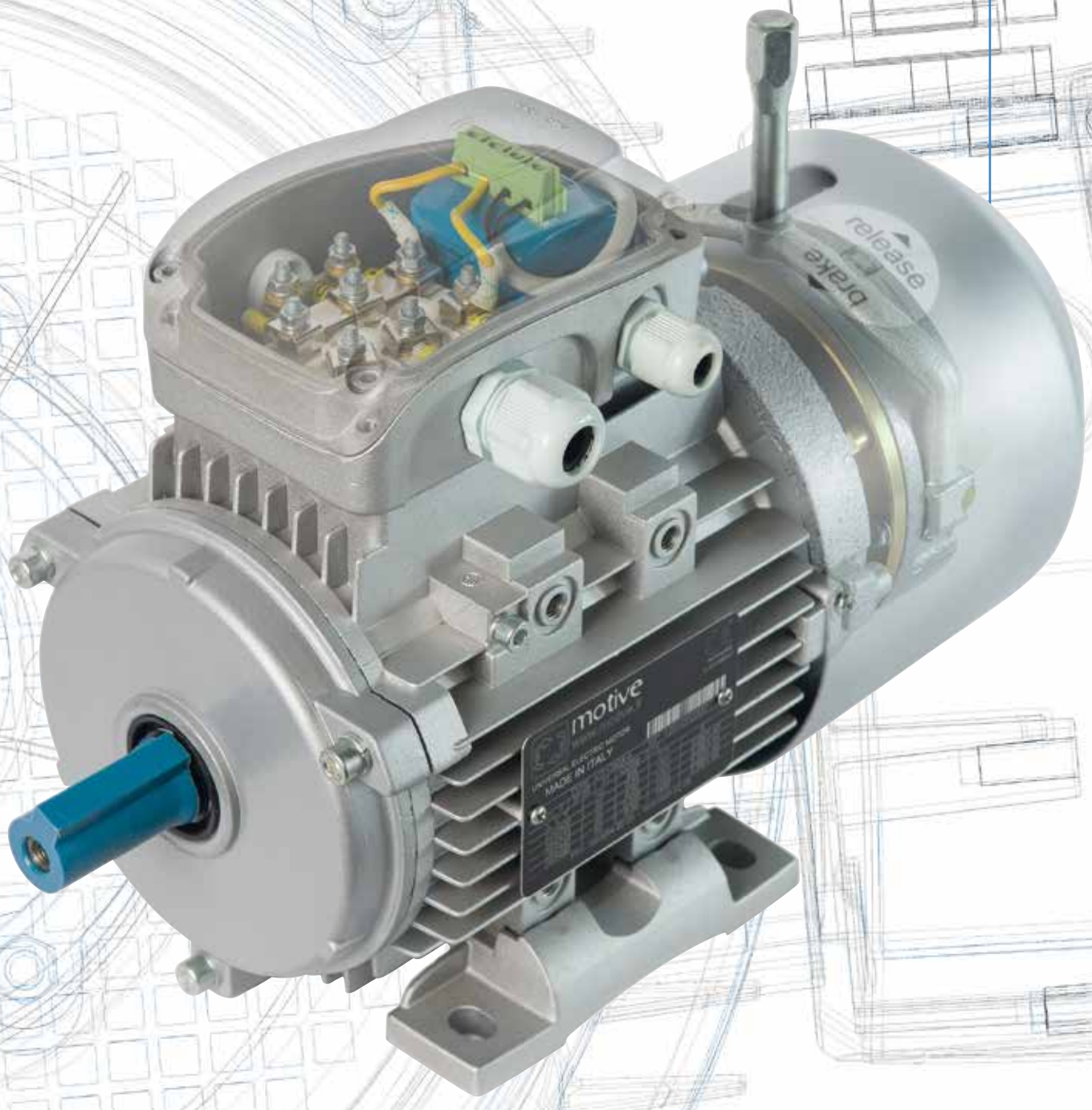

DELPHI AT

Delphi ATDC, AT24, ATTD and ATTD24 series self-braking motors use one or 2 spring-pressure brakes, firmly spliced onto a cast iron shield at the back of the motor.
These motors include a series of characteristics normally considered options by other brands, like:
-The standard hand lever permits to release the brake, making it possible to move manually he shaft,
-The PTO thermal protectors in the winding are a standard up to size 132. PTC are a standard from size 160 and up
-Easy separate connection of the brake in case that the motor is connected to an inverter.
On ATDC and ATTD, the separate brake power supply is achieved, whenever needed, by connecting directly to the brake terminal board located inside the motor terminal box.
On AT24 and ATTD24, the 24Vdc single or double brakes are designed to be directly connected to an inverter (usually having a 24Vdc plug)

On request, the brakes can be modified to be extremely silent for usage in special environments like theatres

ATDC/AT24

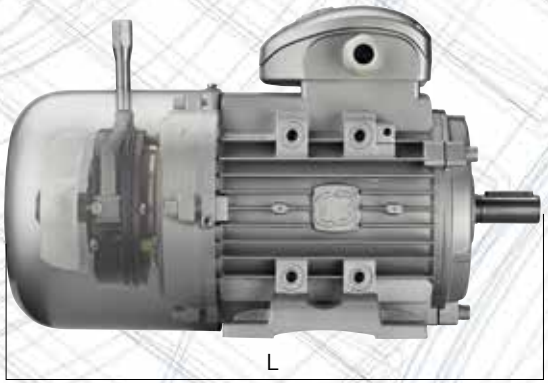

L

ATTD/ATTD24

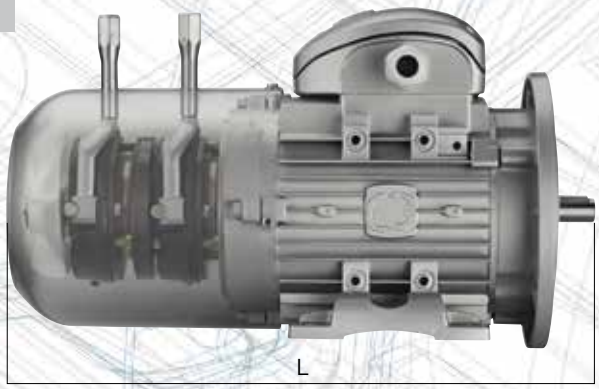

L

	ATDC						AT24				ATDC AT24	ATTD ATTD24
IEC Type	Static max braking torque [Nm]	standard vers. braking time no-load [Sec]	"TA version" braking time no-load [Sec]	input voltage on rectifier [Vac]	output voltage to brake [Vdc]	brake power [W]	Static max braking torque [Nm]	Static min braking torque [Nm]	Braking time no-load [Sec]	brake power [W]	extra Kg on std	extra Kg on std
AT..63	4,5	0,15	<0,05	220-280 (opt. 380-480)	99-126 (opt. 171-216)	20	4,5	4,0	0,06	20	+4	+7,5
AT..71	8,0	0,15	<0,05	220-280 (opt. 380-480)	99-126 (opt. 171-216)	28	4,5	4,0	0,06	20	+5	+9
AT..80	12,5	0,20	<0,05	220-280 (opt. 380-480)	99-126 (opt. 171-216)	30	10,0	9,0	0,09	25	+5,5	+10
AT..90	20,0	0,25	<0,05	220-280 (opt. 380-480)	99-126 (opt. 171-216)	45	16,0	12,0	0,11	45	+6	+11
AT..100	38,0	0,30	<0,05	220-280 (opt. 380-480)	99-126 (opt. 171-216)	60	32,0	28,0	0,14	60	+7	+12,5
AT..112	55,0	0,35	<0,05	380-480	171-216	65	65,0	55,0	0,15	65	+10	+19
AT..132	90,0	0,40	<0,05	380-480	171-216	90	90,0	80,0	0,16	85	+12	+23
AT..160	160,0	0,50	<0,05	380-480	171-216	110	160,0	130,0	0,21	105	+22	+42
AT..180	250,0	0,50	<0,05	380-480	171-216	130					+32	+62
AT..200	420,0	0,50	<0,05	380-480	171-216	140					+40	+77
AT..225	450,0	0,50	<0,05	380-480	171-216	160					+52	+100
AT..250	550,0	0,50	<0,05	380-480	171-216	170					+80	+155
AT..280	900,0	0,50	<0,05	380-480	171-216	360					+106	+209
ATTD/ATTD24	ATTD= ATDCx2					ATTD= ATDCx2	ATTD24= AT24 x 2			ATTD24= AT24 x 2		

ATDC

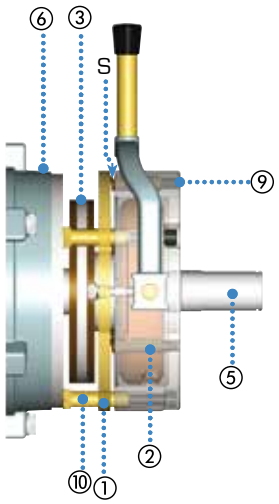

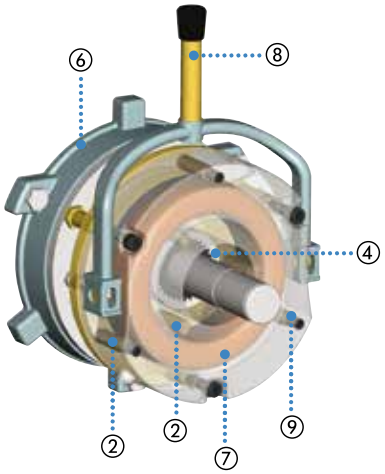

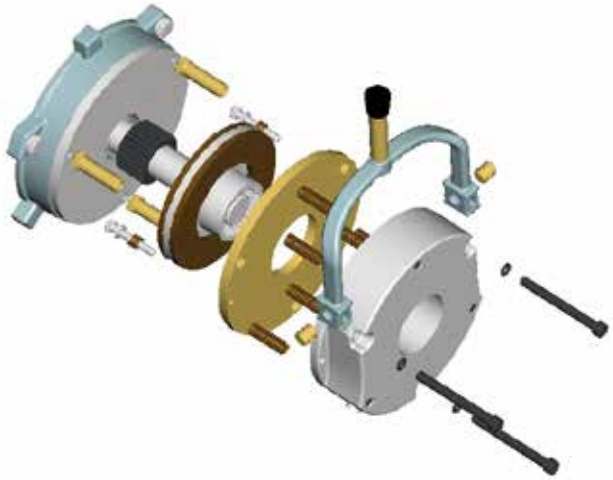

① Mobile armature
② springs
③ Brake disc
④ Driver
⑤ Motor shaft
⑥ Motor flange
⑦ Electromagnet
⑧ Release lever
⑨ Adjuster screws
⑩ Threaded bush
⑪ braking torque setting knob
⑫ ATTD connection plate

S Air gap

BRAKE DESCRIPTION

The delphi AT... series brakes are electromagnetic brakes with negative operation, whose braking action is exercised in the absence of power supply.
The brakes insulation class is F.
The brakes lining is asbestos-free.
The rectifier is of relays type, with protection varistors at the entry and the exit. All brake assemblies are protected against corrosion by painting or heat galvanizing and resined winding. The parts most subject to wear are treated in special atmospheres that provide considerable wear resistance to the parts.

BRAKE OPERATION

When the power supply is interrupted, the excitation coil ⑦ is no longer powered and therefore doesn't exert the magnetic force necessary to restrain the mobile armature ①, hwich, pushed by the pressure springs ②, compresses the brake disk ③ against the motor flange ⑥ on one side and the armature itself on the other, thereby creating a braking action.

ADJUSTMENT

Two different types of adjustment are possible

S air gap adjustment
For proper operation, the air gap S between electromagnet ⑦ and the mobile armature ① must be between the following indicated limits:

MOTOR TYPE	S AIR GAP (mm)
63~71	0.40~0.50
80~160	0.50~0.60

The adjustment is made by using the threaded bushes ⑩, using a thickness gauge to make sure that the wished air gap is reached.

Braking torque adjustment
The braking torque is set to its max level by Motive, but it can be decreased by acting on the adjuster screws ⑨ (ATDC and ATTD motors) or on the knob ⑪ (AT24 and ATTD24).

AT24





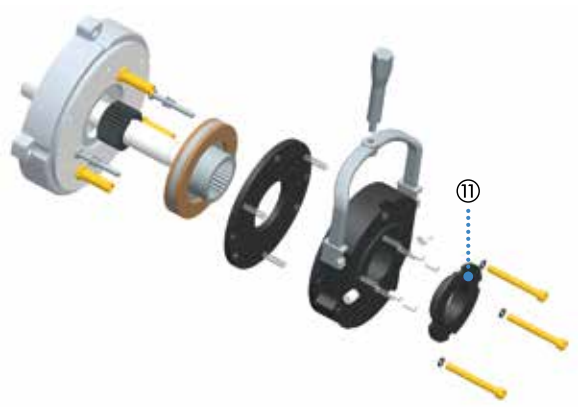

ATTD24

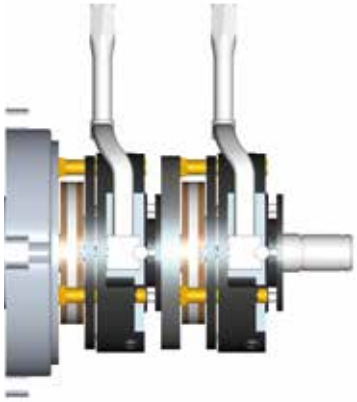



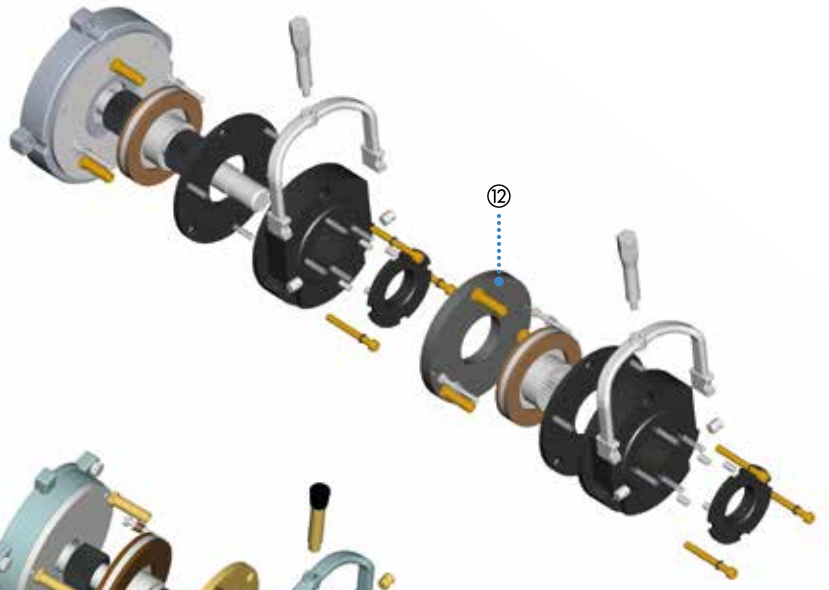

ATTD





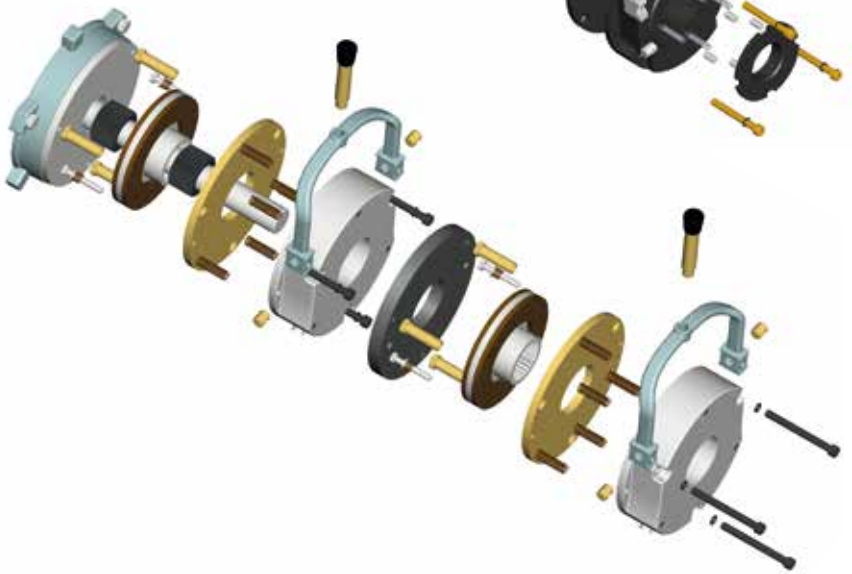

MANUAL RELEASE

Motive brake motors are supplied with the manual release lever in their standard version. If not wished, the lever is like a screw, that can be taken away simply turning it.
ATTD and ATTD24 tandem brake motors, from size 180 up to sized 280, cannot have the manual release.



IP

AT.. brakes are IP66 under an electrical point of view, but mechanically, in case of an outdoor use, they should be protected by rust and by disc adhesion effects given by humidity. In such a case, we suggest to use our protective rubber ring seals
This device prevents the exit or ingress of dust, humidity, dirt, etc., out of or into the braking area.
It is inserted into the groove on the stator. If your brake doesn't have such a groove, you must order a specifically machined brake for that.

In order to safeguard the braking torque, it is necessary to clean periodically the parts inside the rubber ring seal by the dust created by the disc lining.

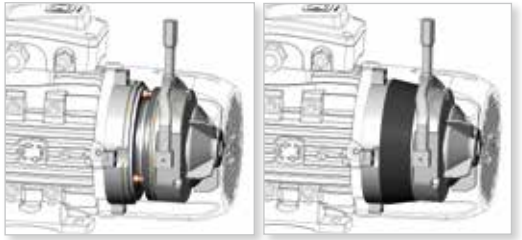

STAINLESS STEEL BRAKING SURFACE

When high humidity in the air can rust fastly the contact surface between the brake disc and the cast-iron NDE shield of the motor, you can request to motive to add a stainless steel shield.

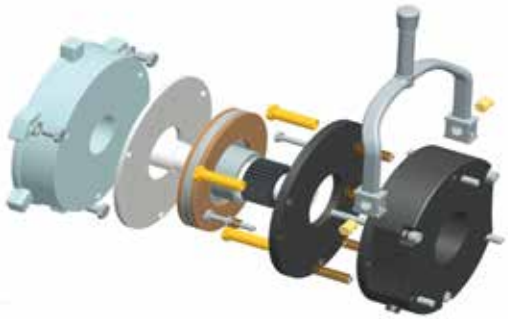

MICRO-SWITCHES TO DETECT BRAKE POSITION

Optional.

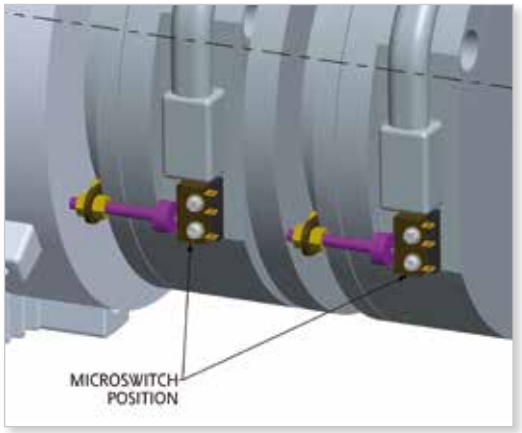

POWER SUPPLY



ATDC brakes are DC brakes power supplied by a rectifier installed inside the motor main terminal box.

The following tablechart shows the tensions on the rectifier and the brake of ATDC model

Type	input voltage on rectifier [Vac]	output voltage to brake [Vdc]
ATDC 63-100	220-280	99-126
ATDC 112-280	380-480	171-216

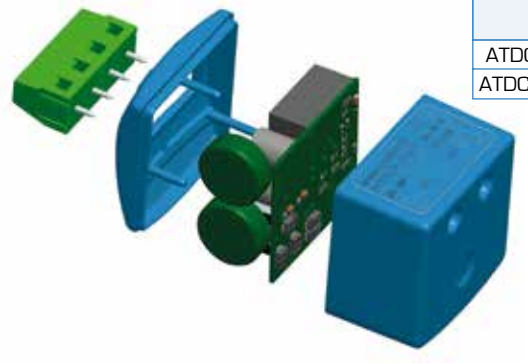

Unless there's a different request of the client, motive supplies ATDC brake motors with the rectifier already connected directly to the main terminal block of the motor (fig. 1, 2, 3 and 4), in order to permit to the motor switching to act at the same time on the brake.

In case that the motor is power supplied by a frequency inverter (fig. 5a and 5b), or at a special voltage*, or at a low tension during the start, or in case that the motor is used to move loads which can have an inertial movement, like lifted weights (such inertial movement can move the motor when the power is switched off, and the motor can act like a generator on the rectifier avoiding the brake locking), disconnect the motor main terminal board from the rectifier, and connect separately the rectifier (ATDC) (fig. 5a, 5b, 6 and 7).
TA special rectifier permits to solve the problem of inertial movements with no need for a separate power supply to the rectifier (fig 3 and 4)

This exclusive rectifier offers the following innovations:
- double semi-wave technology.
- special vibration proof 6 Ampere relays (like the ones used on Ducati race motorbikes).
- electric arcs ultra resistant contacts in silver alloy.
- relays system instead of normal mosfets system, thus more resistant against tension peaks, even if impulsive.
- an in-built current reading system which controls the current sinusoid and the relay commutation time.

What's the advantage? Rectifier is normally the "brain" and the fragile point of any dc brake motor. This rectifier is stronger against disturbs coming from power line, much stronger than what required by European EMC rules for industrial environment; they are more resistant against vibrations; and they are faster.

ATDC 112-280 - 400Vac/180Vdc rectifier (Ill.1)

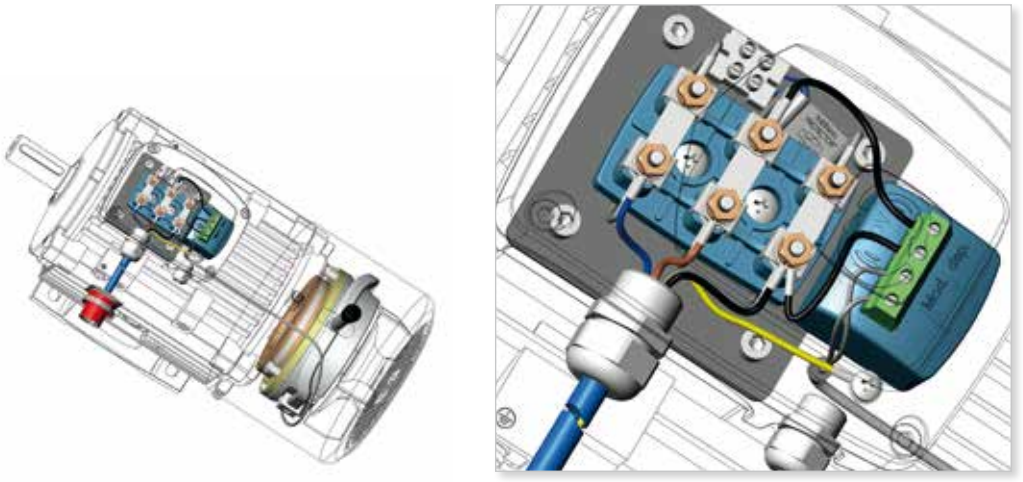

ATDC 63-100 - 230Vac/104Vdc rectifier (Ill.2)

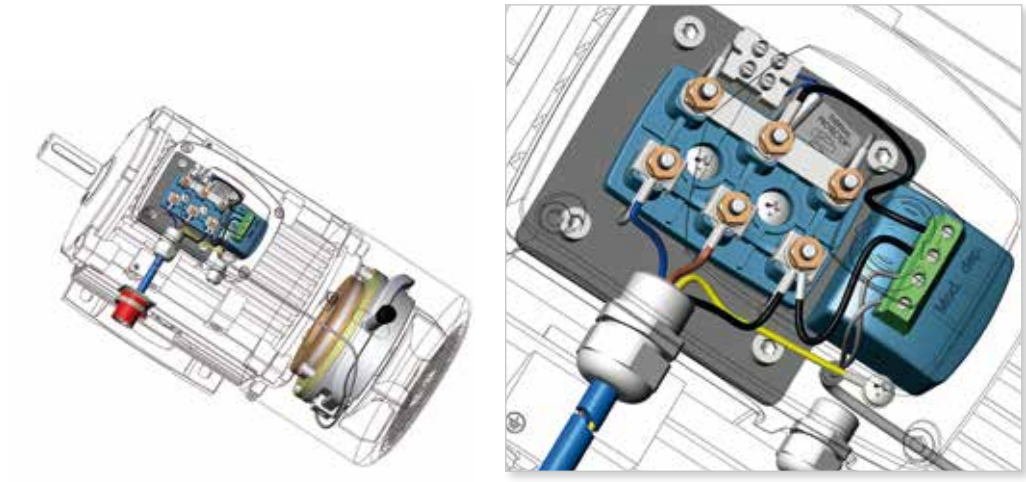

ATDC 112-280 400Vac/180Vdc TA rectifier (Ill.3)

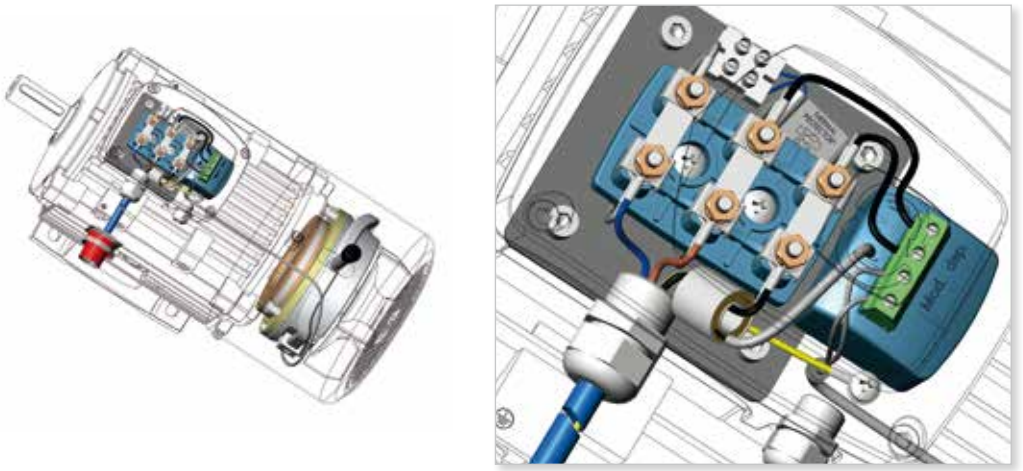

ATDC 63-100 + 230Vac/104Vdc TA rectifier (Ill.4)

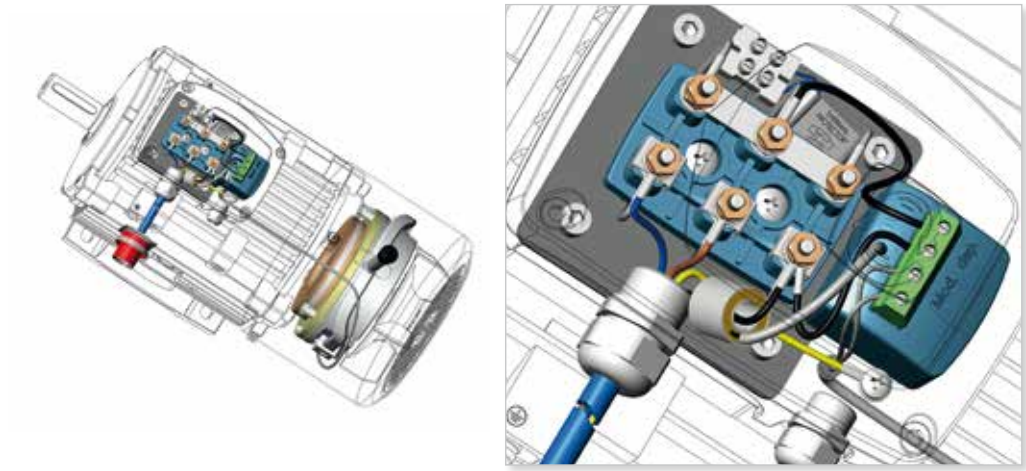

ATDC 112-280 (separate 400Vac/180Vdc rectifier) + inverter (Ill. 5)

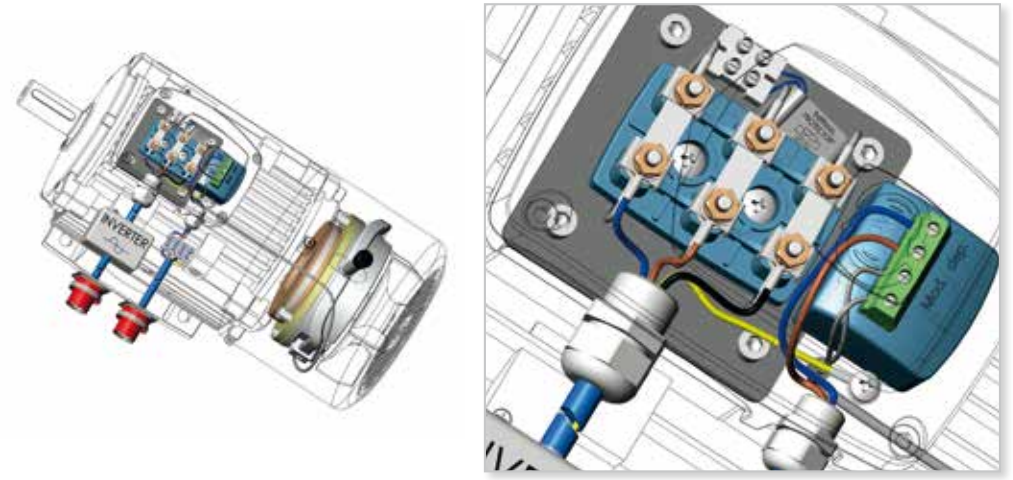

ATDC 63-100 (separate rectifier 230Vac/104Vdc) + inverter (Ill. 5b)

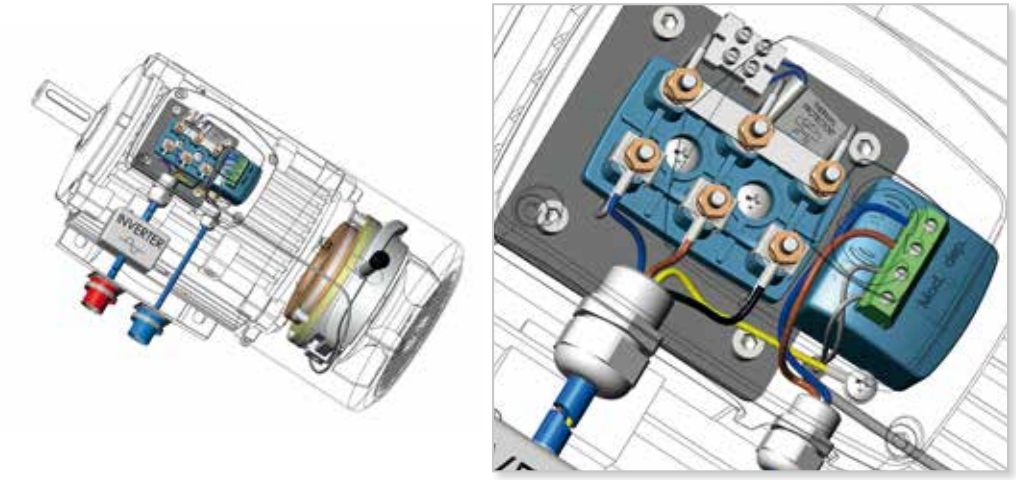

ATDC 112-280 + separate 400Vac/180Vdc rectifier connection (Ill. 6)

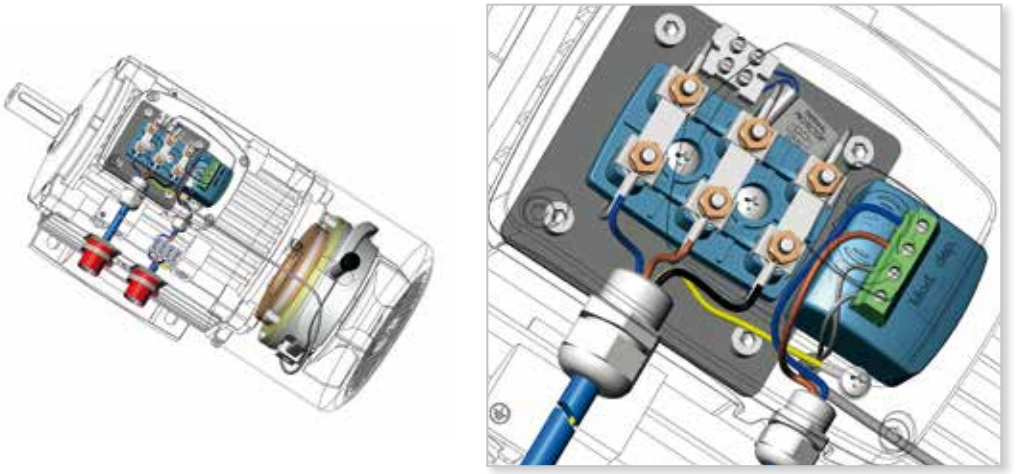

ATDC 63-100 + separate 230/104Vdc rectifier connection (Ill. 7)

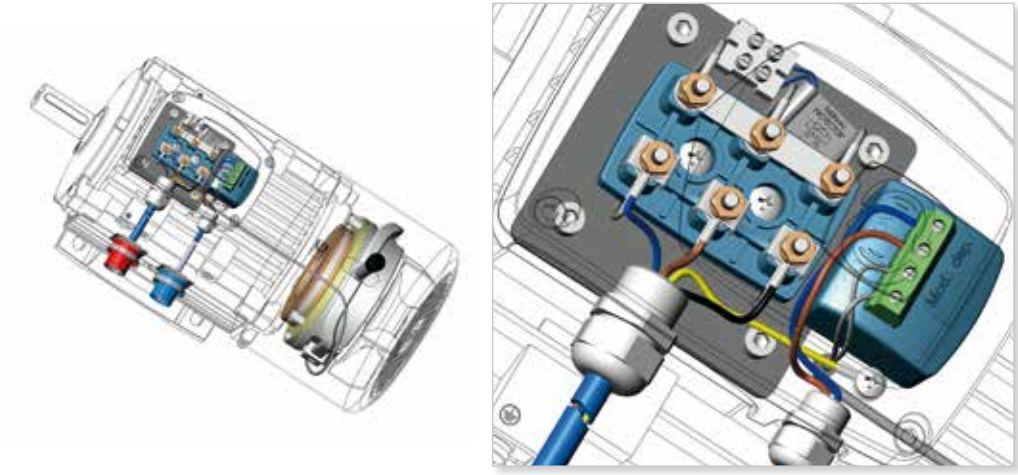

MOTOR CONFIGURATIONS AND INSTALLATION POSITIONS (IEC 34-7)

MOTORS WITH FEET B3		FLANGE-MOUNTED MOTORS B5	FLANGE-MOUNTED MOTORS B14
 IM1051 (IM B6)	 IM1001 (IM B3)	 IM3001 (IM B5)	 IM3601 (IM B14)
 IM1061 (IM B7)	 IM1011 (IM V5)	 IM3011 (IM V1)	 IM3611 (IM V18)
 IM1071 (IM B8)	 IM1031 (IM V6)	 IM3031 (IM V3)	 IM3631 (IM V19)
B3/B5  IM2001 (IM B35)	B3/B14  IM2101 (IM B34)	V1/V5  IM2011 (IM V15)	V3/V6  IM2031 (IM V36)





no ATDC

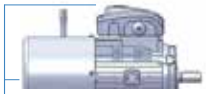

ATDC





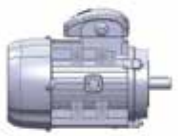



														B3					B5						B14						B5R/B14B					
TYPE	POLES	AC	AD		H	KK	L	D	DH	E	Q	F	G	A	AB	B	C	K	M	N	P	R	S	T	M	N	P	R	S	T	M	N	P	R	S	T
56	2-8	120	102	-	56	M16	198	9	M4x12	20	3	3	7,2	90	111	71	36	5,8	100	80	120	0	7x4	3	65	50	80	0	M5	2,5	-	-	-	-	-	-
63	2-8	130	107	116	63	M20	217	11	M4x12	23	3	4	8,5	100	123	80	40	7	115	95	140	0	10x4	3	75	60	90	0	M5	2,5	100	80	120	0	M6	2,5
71	2-8	145	119	124	71	M20	244	14	M5X12	30	3	5	11,0	112	138	90	45	7	130	110	160	0	10x4	3,5	85	70	105	0	M6	2,5	115	95	140	0	M8	3,0
80	2-8	155	130	139	80	M20	283	19	M6X16	40	3	6	15,5	125	157	100	50	10	165	130	200	0	12x4	3,5	100	80	120	0	M6	3,0	130	110	160	0	M8	3,5
90S	2-8	175	145	146	90	M20	310	24	M8X19	50	5	8	20,0	140	173	100	56	10	165	130	200	0	12x4	3,5	115	95	140	0	M8	3,0	130	110	160	0	M8	3,5
90L	2-8	175	145	146	90	M20	338	24	M8X19	50	5	8	20,0	140	173	125	56	10	165	130	200	0	12x4	3,5	115	95	140	0	M8	3,0	130	110	160	0	M8	3,5
100	2-8	215	157	161	100	M20	373	28	M10X22	60	5	8	24,0	160	196	140	63	12	215	180	250	0	15x4	4	130	110	160	0	M8	3,5	165	130	200	0	M10	3,5
112M	2-8	240	177	177	112	M25	390	28	M10X22	60	5	8	24,0	190	227	140	70	12	215	180	250	0	15x4	4	130	110	160	0	M8	3,5	165	130	200	0	M10	3,5
132S	2-8	275	197	195	132	M32	460	38	M12X28	80	5	10	33,0	216	262	140	89	12	265	230	300	0	15x4	4	165	130	200	0	M10	3,5	215	180	250	0	M12	4,0
132M	2-8	275	197	195	132	M32	496	38	M12X28	80	5	10	33,0	216	262	178	89	12	265	230	300	0	15x4	4	165	130	200	0	M10	3,5	215	180	250	0	M12	4,0
160M	2-8	330	255	255	160	2xM40	615	42	M16X36	110	5	12	37,0	254	320	210	108	15	300	250	350	0	19x4	5	215	180	250	0	M12	4,0						
160L	2-8	330	252	252	160	2xM40	670	42	M16X36	110	5	12	37,0	254	320	254	108	15	300	250	350	0	19x4	5	215	180	250	0	M12	4,0						
180M	2-8	380	270	270	180	2xM40	700	48	M16X36	110	8	14	42,5	279	355	241	121	15	300	250	350	0	19x4	5												
180L	2-8	380	270	270	180	2xM40	740	48	M16X36	110	8	14	42,5	279	355	279	121	15	300	250	350	0	19x4	5												
200L	2-8	420	303	303	200	2xM50	770	55	M20X42	110	12	16	49,0	318	395	305	133	19	350	300	400	0	19x4	5												
225S	2-8	470	312	312	225	2xM50	815	60	M20X42	140	12	18	53,0	356	435	286	149	19	400	350	450	0	19x8	5												
225M	2	470	312	312	225	2xM50	820	55	M20X42	110	12	16	49,0	356	435	311	149	19	400	350	450	0	19x8	5												
225M	4-8	470	312	312	225	2xM50	850	60	M20X42	140	12	18	53,0	356	435	311	149	19	400	350	450	0	19x8	5												
250M	2	510	355	355	250	2xM63	910	60	M20X42	140	12	18	53,0	406	490	349	168	24	500	450	550	0	19x8	5												
250M	4-8	510	355	355	250	2xM63	910	65	M20X42	140	12	18	58,0	406	490	349	168	24	500	450	550	0	19x8	5												
280S	2	550	398	398	280	2xM63	985	65	M20X42	140	12	18	58,0	457	550	368	190	24	500	450	550	0	19x8	5												
280S	4-8	550	398	398	280	2xM63	985	75	M20X42	140	12	20	67,5	457	550	368	190	24	500	450	550	0	19x8	5												
280M	2	550	398	398	280	2xM63	1035	65	M20X42	140	12	18	58,0	457	550	419	190	24	500	450	550	0	19x8	5												
280M	4-8	550	398	398	280	2xM63	1035	75	M20X42	140	12	20	67,5	457	550	419	190	24	500	450	550	0	19x8	5												
315S	2	615	530	-	315	2xM63	1160	65	M20X42	140	15	18	58,0	508	630	406	216	28	600	550	660	0	24x8	6												
315S	4-8	615	530	-	315	2xM63	1270	80	M20X42	170	15	22	71,0	508	630	406	216	28	600	550	660	0	24x8	6												
315M	2	625	530	-	315	2xM63	1190	65	M20X42	140	15	18	58,0	508	630	457	216	28	600	550	660	0	24x8	6												
315M	4-8	625	530	-	315	2xM63	1300	80	M20X42	170	15	22	71,0	508	630	457	216	28	600	550	660	0	24x8	6												
315L	2	625	530	-	315	2xM63	1320	65	M20X42	140	15	18	58,0	508	630	508	216	28	600	550	660	0	24x8	6												
315L	4-8	625	530	-	315	2xM63	1350	80	M20X42	170	15	22	71,0	508	630	508	216	28	600	550	660	0	24x8	6												
355M	2	710	655	-	355	2xM63	1500	75	M20X42	140	15	20	67,5	610	730	560/630	254	28	740	680	800	0	24x8	6												
355M	4-8	710	655	-	355	2xM63	1530	95	M20X42	170	15	25	86,0	610	730	560/630	254	28	740	680	800	0	24x8	6												
355L	2	710	655	-	355	2xM63	1500	75	M20X42	140	15	20	67,5	610	730	560/630	254	28	740	680	800	0	24x8	6												
355L	4-8	710	655	-	355	2xM63	1530	95	M20X42	170	15	25	86,0	610	730	560/630	254	28	740	680	800	0	24x8	6												
400S/M/L	4-8	860	680	-	400	3xM63	1945	110	M24X50	210	-	28	100,0	686	810	630/710	280	36																		

		SV	ATDC AT24	ATDC+SV AT24+SV	ATTD ATTD24	ATTD+SV ATTD24+SV
TYPE	POLES	L	L	L	L	L
56	2-8	-	-	-	-	-
63	2-8	301	261	361	321	421
71	2-8	341	295	411	365	481
80	2-8	388	340	428	417	508
90S	2-8	420	385	464	472	554
90L	2-8	445	410	485	500	575
100	2-8	483	450	507	503	617
112M	2-8	525	475	584	563	674
132S	2-8	590	550	678	640	768
132M	2-8	625	590	715	678	805
160M	2-8	765	720	819	830	929
160L	2-8	810	755	862	865	972
180M	2-8	805	810	954	957	1104
180L	2-8	845	850	992	997	1142
200L	2-8	960	890	1013	1055	1178
225S	2-8	955	935	1090	1115	1125
225M	2	955	935	1090	1115	1125
225M	4-8	985	965	1120	1145	1255
250M	2	1045	1075	1211	1327	1466
250M	4-8	1045	1075	1211	1327	1466
280S	2	1105	1175	1274	1345	1444
280S	4-8	1105	1175	1274	1345	1444
280M	2	1160	1230	1329	1400	1499
280M	4-8	1160	1230	1329	1400	1499
315S	2	1400				
315S	4-8	1430				
315M	2	1500				
315M	4-8	1530				
315L	2	1500				
315L	4-8	1530				
355M	2	1740				
355M	4-8	1770				
355L	2	1740				
355L	4-8	1770				
400S/M/L	4-8	2213				

you can download 2D and 3D drawings from www.motive.it

B3

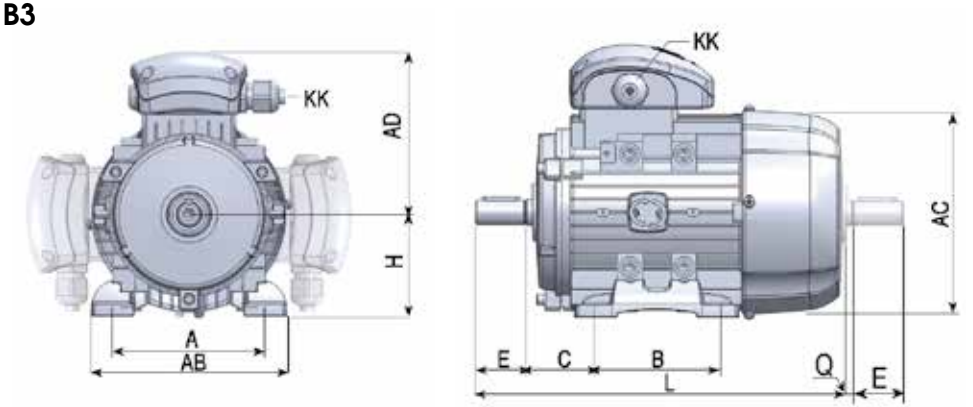

B5, B3/B5

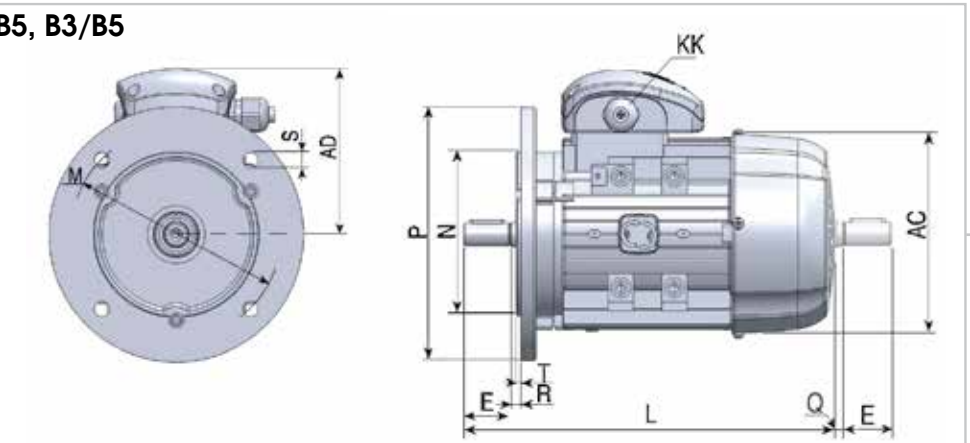

B14, B5R/B14B

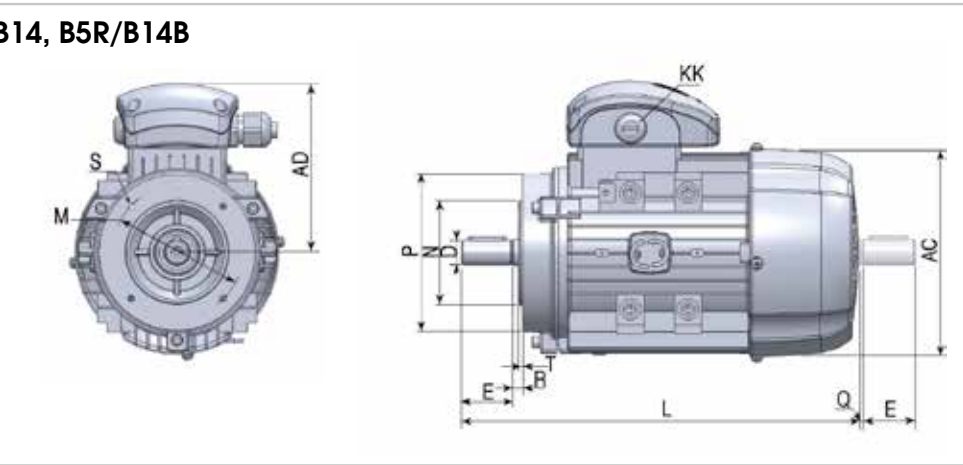

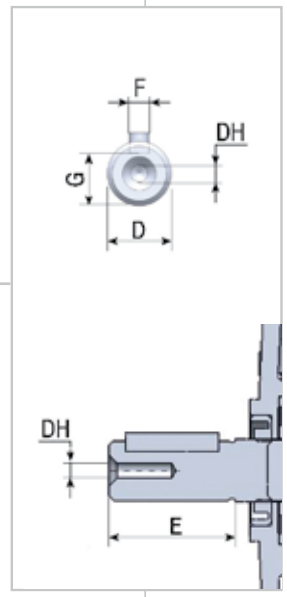

The general electrical specifications are listed in the performance charts that follow. To understand their contents, the following general definitions are provided.

Rated Power:
it is the mechanical power measured at the shaft expressed, according to the latest indications of international Standards Committees, in Watts or Kwatts. However, in the engineering sector it is still common to refer to power in terms of HP

Rated Voltage:
the voltage to be applied to the motor terminals in accordance with the specifications in the following tables

Frequency:
All electrical data in this catalogue refer to three-phase wound motors at 50 Hz. These may be connected to 60 Hz, taking into account the multiplier coefficients in the table below

rated voltage at 50Hz	Volt at 60Hz	rated power W	In (A)	Cn (Nm)	rpm	Is (A)	Cs (Nm)	Cmax (Nm)
230 ± 10%	230 ± 5%	1	1	0,83	1,2	0,83	0,83	0,83
230 ± 10%	230 ± 10%	1	0,95	0,83	1,2	0,83	0,83	0,83
230 ± 10%	240 ± 5%	1,05	1	0,87	1,2	0,87	0,87	0,87
400 ± 10%	380 ± 5%	1	1	0,83	1,2	0,83	0,83	0,83
400 ± 10%	400 ± 10%	1	0,95	0,83	1,2	0,83	0,83	0,83
400 ± 10%	415 ± 10%	1,05	1	0,87	1,2	0,87	0,87	0,87
400 ± 10%	440 ± 10%	1,10	1	0,90	1,2	0,93	0,93	0,93
400 ± 10%	460 ± 5%	1,15	1	0,96	1,2	0,96	0,96	0,96
400 ± 10%	480 ± 5%	1,20	1	1	1,2	1	1	1

for further information, see chapter "wiring diagrams" at page 12

Synchronous speed:
is expressed in rpm and it is obtained by the formula

f 120/p

f= supply frequency Hz

p= number of poles pairs

Rated Current:
"In" is the Rated Current, expressed in Ampere, absorbed by the motor when supplied at Rated Voltage Vn (V) and giving the Rated Power Pn (W) and it is obtained by the formula

$$In = \frac{Pn}{\sqrt{3} \cdot V_n \cdot \eta \cdot \cos\varphi} \ (A)$$

In the following tables, the rated currents are referred to a Voltage supply of 400V. For other voltage supplies the absorbed rated current can be considered inversely proportional to the voltage supply. EX:

Volt	230	380	400	440	690
In	1,74	1,05	1,00	0,91	0,64

Motive motors can face also temporary overloads, with Current increases of 1.5 times the rated current for at least 2 minutes.

Starting current (or locked rotor current):
(you see diagram)

Rated torque:
Cn is expressed in Nm, and it corresponds to the rated power and rated rpm. It is given by the multiplication of the force for the arm (distance) and it is measured in Nm because the force is expressed in in Newton and the distance in metres. The rated torque value is obtained by the formula

Cn (Nm) = Pn x 9550 / rpm

Pn= Rated power in KW

rpm= rated rotation speed

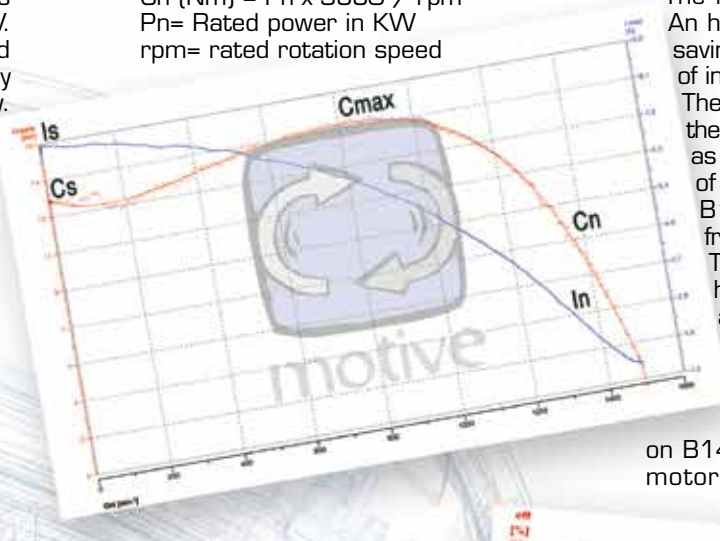

Starting torque (or locked rotor torque):
Cs is the torque that the motor can provide with the rotor at a standstill and the rated power supply.

Maximum torque:
Cmax is the maximum torque developed by the motor at the rated power supply, at a certain speed. It represents also the value of the resistant torque after which the motor stops.In the following performance charts, it is indicated the relation between maximum torque and rated torque and maximum torque

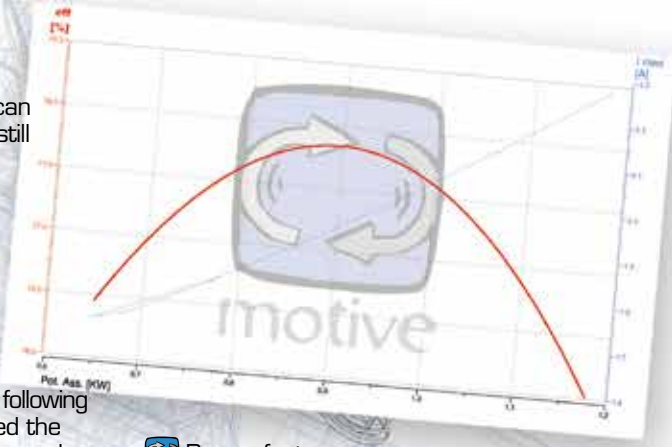

Efficiency:
η is expressed in % and it is given by the relation between the output Power and the addition of output Power and the electric losses of the motor, that is the input power absorbed by the motor. The electric motors losses are mainly of two kinds: for joule effect (rotor and stator) and iron losses. The latest cause essentially heat. An higher efficiency means energy savings, lower heating, longer life of insulating materials.
The smaller a motor is, the more the presence of a double lip oil seal as the ones used on the drive end of delphi flanged motors (B5 or B14) may affect, following the friction generated, performance. The motors B3 up to size 132, however, have V-rings with an almost non existent level of friction. For simplicity, the following performance tables indicate the levels of absorption and performance measured on B14 motors for size 56 and B3 motors for size 63 and above.

Power factor or **cos**φ:
it represents the coseno of the voltage and current gap angle.

temperature rise ΔT:
The temperature rise "ΔT" is the change in temperature of the entire winding of the motor, including the wire placed deep inside the stator slots, when it is being operated at full load.
For example: if a motor is located in a room with a temperature of 40°C, and then is started and operated continuously at the rated power, the winding temperature would rise from 40°C to a higher temperature. The difference between its starting temperature and the final inner elevated temperature, is the ΔT. Almost all our motors are designed to offer a temperature rise of B class or even lower, while their insulation system is min in F class.

Class	amb T (°C)	ΔT (°C)	hot spot allowance (°C)	Tmax (°C)
A	40	60	5	105
E	40	75	5	120
B	40	80	5	130
F	40	105	10	155
H	40	125	15	180

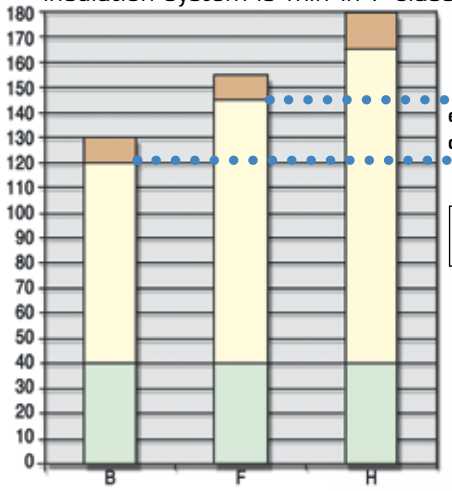

example of overload capability (=life bonus) of an F class motor, with B class temperature rise

This extra margin gives the motor a "life bonus". As a rule of thumb, insulation life will be doubled for each 10 degrees of unused insulation temperature capability.
The most common method of measuring the temperature rise of a motor is based on the differences between the cold and hot ohmic resistance of the winding.
The formula is:

ΔT [°C] = (R2-R1)/R1 *(234,5+T1)-(T2-T1) Where:
R1 = Cold winding resistence in Ohms (just before that the test begins)
R2= Hot winding resistance in Ohms (when the motor has reached its thermal equilibrium)
T1= ambient temperature in °C when test begins
T2= ambient temperature in °C when test is stopped

To change ΔT from Centigrade to Fahrenheit:
°C (ΔT) x 1,8

Note: The motor surface temperature will never exceeed the internal temperature of the motor, and will depend upon the design and cooling arrangements.

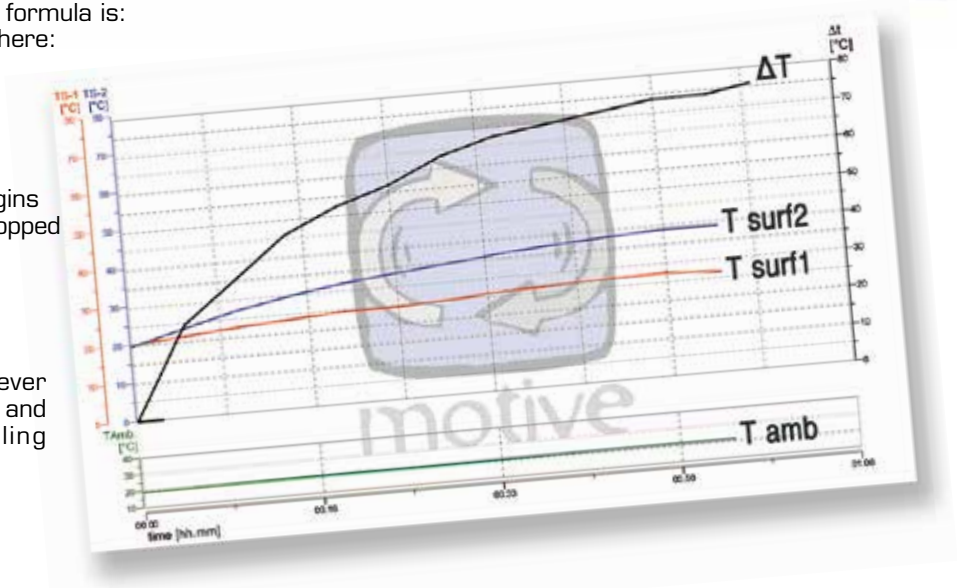

Noise:
The noise is expressed in dB(A). The measures must be taken in accordance with the standard ISO 1680-2, in order to find the Sound Power level LwA measured at 1m of distance from the perimeter of the machine.
EN 60034-9 standard describes the acoustic Power limits to be respected, indicating the maximum sound power level **LwA**. The noise values indicated in the performance charts that follow are referred to a no-load motor working, supplied at 50Hz and with a tolerance of +3 dB(A).

The moment of inertia can be calculated in this way:
J = (1/2) x M x (R^2)
Where M [Kg] is the rotation mass, while R [m] is the ray of the volume at cylindrical symmetry.

TOLERANCES

The data of each motor are specified in this catalogue like requested by the norm IEC 34-1. This describes, in particular, the following tolerances:

Efficiency (Output Power input Power)	-15% di (1- η)
Power factor	1/ 6 of (1- cosφ) min. 0.02 max 0.07
Locked rotor torque	-15% of the guaranteed torque +25% of the guaranteed torque
Maximum torque	-10% -of the guaranteed torque, if torque is not less than 1,5- 1,6 the rated torque
Noise	+3dB
ΔT	+10°C

The test reports on which the following tables are based can be downloaded from the website www.motive.it



2 Poles asynchronous speed 3000 rpm

IE2, high efficiency class IE 60034-30

data at 400V 50Hz

KW	HP	Type	rpm	In (A)	Is (A)	Is / In	Cn (Nm)	Cs (Nm)	Cs / Cn	Cmax (Nm)	Cmax / Cn	η %			min	Pwr. Fact.cosφ			ΔT	LwA	J	Kg
												100%	75%	50%	IE2	100%	75%	50%	(°C)	(dB)	Kgm^2	
0,13	0,18	56B-2	2635	0,36	1,06	3,0	0,47	0,95	2,0	0,94	2,0	65,5	65,3	63,0	-	0,806	0,639	0,500	15	60	0,00010	3,6
0,18	0,25	63A-2	2808	0,47	2,03	4,3	0,61	1,60	2,6	1,68	2,7	71,8	70,8	67,0	-	0,766	0,680	0,564	27	61	0,00021	4,5
0,25	0,35	63B-2	2780	0,63	2,81	4,5	0,86	2,30	2,7	2,40	2,8	74,6	70,9	65,0	-	0,770	0,540	0,450	55	61	0,00030	4,7
0,37	0,5	63C-2	2791	0,93	4,13	4,5	1,27	3,60	2,8	3,67	2,9	76,4	76,3	72,8	-	0,755	0,650	0,505	51	61	0,00043	5,7
0,37	0,5	71A-2	2820	0,94	4,33	4,6	1,25	2,90	2,3	3,53	2,8	74,0	73,7	69,1	-	0,770	0,670	0,525	43	64	0,00055	6,0
0,55	0,75	71B-2	2844	1,27	6,94	5,5	1,85	5,60	3,0	5,56	3,0	82,1	83,6	82,0	-	0,760	0,680	0,520	51	64	0,00060	6,3
0,75	1	71C-2	2819	1,69	9,06	5,4	2,54	7,70	3,0	7,72	3,0	79,7	80,5	78,8	77,4	0,806	0,700	0,581	61	64	0,00068	7,3
0,75	1	80A-2	2890	1,76	10,64	6,1	2,48	5,90	2,4	7,80	3,1	80,0	79,0	75,2	77,4	0,770	0,700	0,559	42	67	0,00075	10,0
1,1	1,5	80B-2	2875	2,36	14,18	6,0	3,65	16,60	4,5	11,70	3,2	83,8	84,8	84,0	79,6	0,803	0,730	0,610	48	67	0,00090	11,0
1,5	2	80C-2	2876	3,17	19,72	6,0	4,98	22,80	2,5	13,45	2,7	82,5	82,6	80,1	81,3	0,828	0,760	0,636	54	67	0,00105	12,5
1,5	2	90S-2	2864	3,17	18,62	5,9	5,00	12,30	2,5	15,32	3,1	82,1	82,1	79,7	81,3	0,833	0,760	0,640	62	72	0,00120	13,0
2,2	3	90L-2	2859	4,51	28,31	6,3	7,35	22,30	3,0	23,16	3,2	83,6	85,0	83,9	83,2	0,843	0,780	0,660	70	72	0,00140	14,0
3	4	100L-2	2882	5,94	38,10	6,4	9,94	23,70	2,4	19,75	2,0	84,7	85,4	83,0	84,6	0,860	0,813	0,704	78	76	0,00290	25,0
4	5,5	100LB-2	2863	7,61	47,90	6,3	13,34	34,00	2,5	40,23	3,0	85,9	87,3	86,6	85,8	0,883	0,840	0,757	80	76	0,00420	27,0
4	5,5	112M-2	2887	7,49	46,28	6,2	13,23	28,70	2,2	41,00	3,1	85,8	86,8	85,9	85,8	0,899	0,860	0,768	72	77	0,00550	28,0
5,5	7,5	112MB-2	2883	9,85	67,11	6,8	18,22	45,40	2,5	53,64	2,9	87,1	89,1	89,0	87,0	0,925	0,900	0,817	98	77	0,00833	34,0
5,5	7,5	132SA-2	2908	10,21	67,42	6,6	18,06	35,80	2,0	54,18	3,0	87,2	88,4	87,0	87,0	0,892	0,838	0,764	74	80	0,01115	40,0
7,5	10	132SB-2	2897	13,50	91,05	6,7	24,72	52,40	2,1	73,09	3,0	88,2	89,2	88,8	88,1	0,909	0,871	0,803	89	80	0,12800	45,5
9,2	12,5	132MA-2	2906	16,16	126,72	7,8	30,23	77,40	2,6	90,70	3,0	89,3	90,0	89,9	88,8	0,920	0,900	0,870	72	81	0,02000	53,0
11	15	132MB-2	2895	19,03	146,56	7,7	36,29	90,72	2,5	108,86	3,0	89,5	90,4	89,9	89,4	0,932	0,916	0,886	91	81	0,02500	55,0
11	15	160MA-2	2932	19,82	127,63	6,4	35,83	78,40	2,2	56,10	1,6	89,5	89,3	87,3	89,4	0,895	0,870	0,810	56	86	0,03770	110,0
15	20	160MB-2	2925	26,91	151,67	5,6	48,97	111,20	2,3	75,73	1,5	90,4	90,5	88,3	90,3	0,890	0,853	0,794	91	86	0,04990	120,0
18,5	25	160L-2	2928	32,46	210,47	6,5	60,34	136,40	2,3	65,93	1,1	91,1	91,5	89,8	90,9	0,903	0,876	0,826	95	86	0,05500	135,0
22	30	180M-2	2959	39,26	278,51	7,1	71,00	174,50	2,5	220,80	3,1	91,4	90,8	88,4	91,3	0,885	0,860	0,804	60	89	0,07500	165,0
30	40	200LA-2	2959	52,77	332,71	6,3	96,82	174,28	1,8	309,83	3,2	92,2	93,2	89,5	92,0	0,890	0,871	0,811	63	92	0,12400	217,0
37	50	200LB-2	2949	64,06	391,35	6,1	119,82	227,66	1,9	359,46	3,0	92,5	92,3	89,0	92,5	0,901	0,888	0,841	40	92	0,13900	243,0
45	60	225M-2	2963	78,28	472,34	6,0	145,04	290,08	2,0	435,12	3,0	93,5	93,3	90,2	92,9	0,887	0,865	0,804	69	92	0,23300	320,0
55	75	250M-2	2981	95,63	545,37	5,7	176,20	211,44	1,2	475,74	2,7	93,5	91,6	87,5	93,2	0,888	0,870	0,823	45	93	0,31200	390,0
75	100	280S-2	2970	127,69	614,63	4,8	241,16	337,63	1,4	506,44	2,1	94,3	92,4	88,3	93,8	0,899	0,895	0,874	55	94	0,57900	540,0
90	125	280M-2	2974	153,09	796,95	5,2	289,00	462,41	1,6	693,61	2,4	94,2	94,1	92,1	94,1	0,901	0,895	0,858	60	94	0,67500	590,0
110	150	315S-2	2980	185,05	1313,83	7,1	352,52	634,53	1,8	775,54	2,2	94,4	93,8	92,0	94,3	0,909	0,903	0,840	80	96	1,18000	880,0
132	180	315MA-2	2980	218,75	1553,14	7,1	423,02	761,44	1,8	930,64	2,2	95,0	94,4	93,0	94,6	0,917	0,912	0,903	75	96	1,82000	1000,0
160	215	315LA-2	2980	262,63	1864,69	7,1	512,75	922,95	1,8	1128,05	2,2	95,0	94,4	92,9	94,8	0,926	0,913	0,858	75	99	2,08000	1055,0
200	270	315LB-2	2980	334,84	2377,36	7,1	640,94	1153,69	1,8	1410,07	2,2	95,6	95,1	93,9	95,0	0,902	0,889	0,845	80	99	2,38000	1110,0
250	335	355M-2	2985	410,72	2916,11	7,1	799,83	1279,73	1,6	1759,63	2,2	95,6	95,1	93,8	95,0	0,919	0,908	0,878	70	103	3,00000	1900,0
315	423	355L-2	2985	524,82	3726,23	7,1	1007,79	1612,46	1,6	2217,14	2,2	95,2	94,9	94,0	95,0	0,910	0,890	0,870	75	103	3,50000	2300,0

4 Poles asynchronous speed 1500 rpm

IE2, high efficiency class IE 60034-30

data at 400V 50Hz

KW	HP	Type	rpm	In (A)	Is (A)	Is / In	Cn (Nm)	Cs (Nm)	Cs / Cn	Cmax (Nm)	Cmax / Cn	η % 100%	η % 75%	η % 50%	min IE2	Pwr. Fact. cosφ 100%	Pwr. Fact. cosφ 75%	Pwr. Fact. cosφ 50%	ΔT (°C)	LwA (dB)	J Kgm²	Kg
0,09	0,12	56B-4	1346	0,33	0,97	2,9	0,64	1,80	2,8	1,80	2,8	60,7	58,0	43,0	-	0,647	0,540	0,360	36	52	0,00015	3,6
0,13	0,18	63A-4	1355	0,40	1,28	3,2	0,92	2,10	2,3	2,10	2,3	64,7	63,9	62,0	-	0,720	0,620	0,590	30	52	0,00030	4,5
0,18	0,25	63B-4	1393	0,56	2,02	3,6	1,23	2,90	2,4	3,10	2,5	68,2	65,9	58,0	-	0,680	0,550	0,400	38	52	0,00040	4,7
0,25	0,35	63C-4	1380	0,72	2,41	3,3	1,73	4,10	2,4	4,00	2,3	71,0	71,3	67,6	-	0,702	0,601	0,468	51	52	0,00045	5,7
0,25	0,35	71A-4	1400	0,69	2,90	4,2	1,71	4,30	2,5	4,57	2,7	72,7	72,0	68,0	-	0,720	0,615	0,500	41	55	0,00050	6,0
0,37	0,5	71B-4	1366	1,04	3,72	3,6	2,59	6,00	2,3	6,10	2,4	71,5	72,0	61,2	-	0,720	0,630	0,412	65	55	0,00081	6,3
0,55	0,75	71C-4	1400	1,47	5,78	3,9	3,75	6,90	1,8	6,60	1,8	74,9	75,3	72,0	-	0,720	0,645	0,500	80	55	0,00150	7,3
0,55	0,75	80A-4	1391	1,49	6,46	4,3	3,78	9,10	2,4	10,20	2,7	75,0	75,4	73,0	-	0,710	0,610	0,500	50	58	0,00182	10,0
0,75	1	80B-4	1394	1,99	7,57	3,8	5,14	12,50	2,4	12,65	2,5	79,6	79,4	74,0	79,6	0,685	0,606	0,456	77	58	0,00212	11,0
1,1	1,5	80C-4	1390	2,85	11,03	3,9	7,56	18,70	2,5	12,70	1,7	81,5	81,7	77,9	81,4	0,684	0,560	0,440	86	58	0,00222	12,5
1,1	1,5	90S-4	1378	2,50	9,89	4,0	7,62	16,20	2,1	17,53	2,3	81,4	83,2	81,5	81,4	0,779	0,642	0,541	78	61	0,00242	13,0
1,5	2	90L-4	1413	3,54	18,44	5,2	10,14	27,60	2,7	31,05	3,1	82,9	84,0	82,8	82,8	0,738	0,642	0,531	46	61	0,00303	14,0
1,9	2,6	90LB-4	1415	4,47	23,24	5,2	12,82	24,61	1,9	26,50	2,1	84,3	84,6	82,0	84,3	0,728	0,630	0,488	55	61	0,00414	16,0
2,2	3	100LA-4	1435	4,80	25,82	5,4	14,64	33,20	2,3	41,87	2,9	84,4	84,5	82,1	84,3	0,784	0,668	0,546	68	64	0,00545	23,0
3	4	100LB-4	1407	6,39	27,93	4,4	20,36	41,20	2,0	30,12	1,5	85,5	87,9	87,1	85,5	0,793	0,700	0,550	94	64	0,00677	25,0
4	5,5	112M-4	1415	7,75	39,24	5,1	27,00	51,40	1,9	40,79	1,5	86,6	89,0	86,8	86,6	0,860	0,800	0,720	76	65	0,00960	28,0
5	6,8	112MB-4	1445	10,02	63,50	6,3	33,04	82,70	2,5	71,14	2,2	87,7	88,7	87,9	87,7	0,821	0,750	0,640	77	65	0,01515	35,0
5,5	7,5	132S-4	1446	10,74	61,43	5,7	36,32	69,00	1,9	74,88	2,1	87,8	89,5	88,5	87,7	0,842	0,780	0,660	83	71	0,02161	45,0
7,5	10	132M-4	1450	14,38	91,41	6,4	49,40	97,00	2,0	99,00	2,0	88,8	89,7	70,0	88,7	0,848	0,800	0,700	92	71	0,02990	47,0
9,2	12,5	132MB-4	1426	16,71	95,09	5,7	61,61	123,30	2,0	97,88	1,6	89,9	92,2	92,6	89,8	0,884	0,850	0,784	96	72	0,03131	55,0
11	15	132MC-4	1461	21,96	170,43	7,8	71,90	196,40	2,7	186,95	2,6	89,8	89,8	87,8	89,8	0,805	0,770	0,610	80	73	0,04040	57,0
11	15	160M-4	1460	21,67	134,07	6,2	71,95	153,40	2,1	208,66	2,9	89,8	89,4	87,6	89,8	0,816	0,776	0,654	70	75	0,06161	118,0
15	20	160L-4	1456	28,12	178,96	6,4	98,39	197,10	2,0	245,96	2,5	90,8	91,7	90,6	90,6	0,848	0,810	0,717	72	75	0,09272	132,0
18,5	25	180M-4	1476	34,45	215,02	6,2	119,70	220,90	1,8	334,30	2,8	91,2	91,1	89,9	91,2	0,850	0,810	0,723	51	76	0,14039	164,0
22	30	180L-4	1470	39,57	202,00	5,1	142,93	200,10	1,4	357,31	2,5	91,6	91,6	90,8	91,6	0,876	0,847	0,775	75	76	0,15958	182,0
30	40	200L-4	1475	53,84	323,02	6,0	194,24	339,92	1,8	505,02	2,6	93,2	93,0	91,5	92,3	0,863	0,816	0,765	73	79	0,26462	245,0
37	50	225S-4	1480	66,07	345,00	5,2	238,75	382,00	1,6	573,00	2,4	92,8	93,3	92,3	92,7	0,871	0,840	0,777	91	81	0,41006	258,0
45	60	225M-4	1480	79,02	437,00	5,5	290,37	377,48	1,3	580,74	2,0	93,3	93,3	92,1	93,1	0,881	0,863	0,799	70	81	0,47369	290,0
55	75	250M-4	1480	97,61	585,64	6,0	354,90	603,33	1,7	816,27	2,3	93,7	96,1	93,0	93,5	0,868	0,841	0,780	75	83	0,66660	388,0
75	100	280S-4	1484	129,70	648,48	5,0	482,65	723,97	1,5	917,03	1,9	94,1	94,2	92,2	94,0	0,887	0,860	0,840	80	80	1,30000	510,0
90	120	280M-4	1485	152,96	747,77	4,9	578,79	1041,82	1,8	1446,97	2,5	94,7	94,7	94,7	94,2	0,897	0,889	0,854	54	86	1,49000	606,0
110	150	315S-4	1489	189,80	1138,79	6,0	705,51	1199,36	1,7	1904,87	2,7	95,1	94,6	92,6	94,5	0,880	0,860	0,803	71	93	3,13000	910,0
132	180	315M-4	1485	224,09	1174,96	5,2	848,89	1358,22	1,6	2207,11	2,6	95,2	95,3	94,7	94,7	0,893	0,875	0,831	55	93	3,65000	1000,0
160	220	315LA-4	1485	276,24	1906,08	6,9	1028,96	2160,81	2,1	2263,70	2,2	95,0	94,5	94,0	94,9	0,880	0,850	0,800	80	97	4,11200	1055,0
200	270	315LB-4	1481	339,92	2345,45	6,9	1289,67	2708,31	2,1	2837,27	2,2	95,1	94,7	93,8	95,1	0,893	0,885	0,844	75	97	4,81000	1128,0
250	335	355M-4	1483	420,03	2898,23	6,9	1609,91	3380,82	2,1	3541,81	2,2	95,6	95,4	94,7	95,1	0,899	0,897	0,874	80	101	6,53000	1700,0
315	423	355L-4	1490	524,91	3621,87	6,9	2018,96	4239,82	2,1	4441,71	2,2	95,7	95,5	94,7	95,1	0,905	0,883	0,818	70	101	8,24000	1900,0
355	483	400M-4	1485	598,04	4066,65	6,8	2283,00	4337,69	1,9	5022,59	2,2	95,2	95,1	95,0	95,1	0,900	0,890	0,880	80	111	14,70000	2860,0
400	544	400MA-4	1490	673,63	4580,70	6,8	2563,76	4871,14	1,9	5640,27	2,2	96,3	96,2	96,1	-	0,890	0,880	0,870	80	111	14,98000	2980,0
455	620	400MB-4	1490	766,26	5210,55	6,8	2916,28	5540,92	1,9	6415,81	2,2	96,3	96,2	96,0	-	0,890	0,880	0,870	80	111	15,80000	3080,0
500	675	400LA-4	1490	842,04	5725,88	6,8	3204,70	6088,93	1,9	7050,34	2,2	96,3	96,2	96,0	-	0,890	0,880	0,860	80	111	18,50000	3348,0
560	760	400LB-4	1490	943,09	6412,98	6,8	3589,26	6819,60	1,9	7896,38	2,2	96,3	96,2	96,1	-	0,890	0,880	0,870	80	111	19,90000	3400,0
630	857	400LC-4	1490	1060,97	7214,60	6,8	4037,92	7672,05	1,9	8883,42	2,2	96,3	96,2	96,1	-	0,890	0,880	0,870	80	112	21,50000	3590,0

6 Poles asynchronous speed 1000 rpm

IE2, high efficiency class IE 60034-30

data at 400V 50Hz

KW	HP	Type	rpm	In (A)	Is (A)	Is / In	Cn (Nm)	Cs (Nm)	Cs / Cn	Cmax (Nm)	Cmax / Cn	η %			min	Pwr. fact. cosφ			ΔT	LwA	J	Kg
												100%	75%	50%	IE2	100%	75%	50%	(°C)	(dB)	Kgm^2	
0,18	0,25	71A-6	921	0,66	1,93	2,9	1,87	4,20	2,3	4,30	2,3	62,7	61,1	53,7	-	0,631	0,540	0,418	41	51	0,00110	6,0
0,25	0,35	71B-6	910	0,87	2,62	3,0	2,62	6,00	2,3	6,00	2,3	64,0	62,5	57,1	-	0,650	0,550	0,426	54	51	0,00140	6,3
0,37	0,5	80A-6	928	1,20	3,58	3,0	3,81	6,80	1,8	8,10	2,1	67,3	66,0	60,9	-	0,660	0,562	0,451	58	53	0,00160	10,0
0,55	0,75	80B-6	917	1,71	4,72	2,8	5,73	10,40	1,8	10,60	1,9	70,5	71,4	67,7	-	0,658	0,574	0,440	80	53	0,00190	11,0
0,75	1	90S-6	915	2,01	5,98	3,0	7,83	13,00	1,7	9,97	1,3	76,0	77,9	75,2	75,9	0,710	0,610	0,480	69	57	0,00290	13,0
1,1	1,5	90L-6	915	2,74	9,93	3,6	11,48	22,10	1,9	16,57	1,4	78,3	80,2	79,3	78,1	0,740	0,650	0,560	67	57	0,00350	14,0
1,5	2	100L-6	944	3,91	16,15	4,1	15,17	29,39	1,9	35,09	2,3	79,9	80,3	77,6	79,8	0,693	0,609	0,477	71	58	0,00690	23,0
2,2	3	112M-6	951	5,45	25,84	4,7	22,09	45,40	2,1	57,79	2,6	81,9	82,7	80,4	81,8	0,712	0,610	0,475	74	61	0,01400	25,0
3	4	132S-6	969	6,95	38,23	5,5	29,57	62,40	2,1	81,20	2,7	84,5	84,6	82,1	83,3	0,737	0,710	0,536	63	64	0,02860	28,0
4	5,5	132MA-6	969	8,85	56,55	6,4	39,42	89,90	2,3	121,80	3,1	84,7	84,5	82,0	84,6	0,770	0,690	0,566	76	64	0,03570	45,0
5,5	7,5	132MB-6	966	12,38	65,09	5,3	54,37	103,20	1,9	95,28	1,8	87,0	87,5	87,0	86,0	0,737	0,653	0,545	64	64	0,04510	55,0
7,5	10	160M-6	978	16,97	88,24	5,2	73,24	109,85	1,5	146,47	2,0	88,6	89,2	88,5	87,2	0,720	0,670	0,600	50	71	0,00810	118,0
11	15	160L-6	970	23,37	106,35	4,6	108,30	173,28	1,6	184,11	1,7	89,5	90,5	89,9	88,7	0,759	0,700	0,582	70	71	0,11600	125,0
15	20	180L-6	984	29,79	140,65	4,7	145,58	199,20	1,4	334,83	2,3	89,8	89,4	88,0	89,7	0,809	0,750	0,657	75	73	0,20700	160,0
18,5	25	200LA-6	970	35,28	183,46	5,2	182,14	256,30	1,4	454,99	2,5	91,0	90,8	89,7	90,4	0,832	0,781	0,685	60	76	0,31500	217,0
22	30	200LB-6	982	42,61	215,40	5,1	213,95	315,30	1,5	534,88	2,5	91,1	91,0	89,3	90,9	0,818	0,763	0,668	80	76	0,36000	244,0
30	40	225M-6	980	55,62	236,55	4,3	292,35	333,20	1,1	526,22	1,8	91,8	91,6	92,0	91,7	0,848	0,828	0,759	60	76	0,54700	295,0
37	50	250M-6	983	68,00	297,27	4,4	359,46	488,40	1,4	898,65	2,5	92,6	92,3	92,4	92,2	0,848	0,828	0,759	56	78	0,84300	365,0
45	60	280S-6	982	78,93	360,33	4,6	437,63	616,80	1,4	919,02	2,1	93,2	93,6	92,2	92,7	0,883	0,865	0,813	42	80	1,39000	500,0
55	75	280M-6	985	96,24	459,99	4,8	533,25	759,00	1,4	1119,82	2,1	93,1	93,6	93,2	93,1	0,886	0,873	0,822	71	80	1,65000	545,0
75	100	315S-6	986	132,96	534,60	4,0	726,42	934,60	1,3	1089,63	1,5	94,5	95,1	94,4	93,7	0,862	0,860	0,820	70	85	4,11000	810,0
90	125	315MA-6	985	159,67	1069,81	6,7	872,59	1745,18	2,0	1745,18	2,0	94,6	94,5	93,6	94,0	0,860	0,831	0,766	75	85	4,78000	900,0
110	150	315LA-6	985	195,78	1311,71	6,7	1066,50	2132,99	2,0	2132,99	2,0	94,3	93,9	93,7	94,3	0,860	0,840	0,820	80	85	5,45000	1010,0
132	180	315LB-6	985	233,94	1567,40	6,7	1279,80	2559,59	2,0	2559,59	2,0	94,7	94,2	93,7	94,6	0,860	0,840	0,810	80	85	6,12000	1140,0
160	220	355MA-6	990	279,71	1874,08	6,7	1543,43	2932,53	1,9	3086,87	2,0	94,9	94,2	93,3	94,8	0,870	0,870	0,850	80	92	9,50000	1550,0
200	270	355MB-6	990	341,43	2287,55	6,7	1929,29	3665,66	1,9	3858,59	2,0	95,0	94,5	94,0	95,0	0,890	0,870	0,850	80	92	10,40000	1600,0
250	335	355L-6	990	431,63	2891,93	6,7	2411,62	4582,07	1,9	4823,23	2,0	95,0	95,0	94,0	95,0	0,880	0,860	0,840	80	92	12,40000	1700,0

8 Poles asynchronous speed 750 rpm

data at 400V 50Hz

KW	HP	Type	rpm	In (A)	Is (A)	Is / In	Cn (Nm)	Cs (Nm)	Cs / Cn	Cmax (Nm)	Cmax / Cn	η % 100%	η % 75%	η % 50%	Pwr. fact. cosφ 100%	Pwr. fact. cosφ 75%	Pwr. fact. cosφ 50%	ΔT (°C)	LwA (dB)	J Kgm²	Kg
0,13	0,18	71B-8	651	0,71	1,48	2,1	1,91	3,80	2,0	3,93	2,1	48,2	44,9	39,0	0,550	0,460	0,390	76	52	0,00080	6,3
0,18	0,25	80A-8	694	0,83	2,01	2,4	2,48	4,70	1,9	5,50	2,2	56,1	51,0	44,7	0,560	0,460	0,392	54	52	0,00180	10,0
0,25	0,35	80B-8	691	1,10	2,62	2,4	3,46	6,90	2,1	7,06	2,2	61,0	58,2	52,2	0,540	0,450	0,373	56	52	0,00190	11,0
0,37	0,5	90S-8	670	1,41	5,65	4,0	5,27	10,55	2,0	10,55	2,0	62,0	61,0	54,0	0,610	0,550	0,350	40	54	0,00210	13,0
0,55	0,75	90L-8	701	2,04	6,25	3,1	7,49	15,50	2,1	18,00	2,4	68,3	66,0	58,1	0,570	0,490	0,366	22	54	0,00240	14,0
0,75	1	100LA-8	712	2,24	8,66	3,9	10,06	21,70	2,2	25,09	2,5	75,9	75,1	70,3	0,636	0,550	0,426	47	57	0,00900	23,0
1,1	1,5	100LB-8	702	3,38	12,14	3,6	14,96	31,30	2,1	35,91	2,4	73,9	73,4	68,5	0,635	0,524	0,397	65	57	0,01000	25,0
1,5	2	112M-8	711	4,21	16,94	4,0	20,15	43,80	2,2	50,70	2,5	79,2	79,8	79,0	0,650	0,550	0,500	48	61	0,02450	28,0
2,2	3	132S-8	710	5,54	33,23	6,0	29,59	53,26	1,8	59,18	2,0	81,9	82,2	80,0	0,700	0,660	0,481	80	64	0,03140	45,0
3	4	132M-8	716	7,25	31,48	4,3	40,01	71,90	1,8	93,01	2,3	83,0	83,9	82,2	0,720	0,650	0,494	63	64	0,03950	55,0
4	5,5	160MA-8	720	9,32	55,94	6,0	53,06	100,81	1,9	106,11	2,0	86,0	85,8	84,0	0,720	0,640	0,600	75	68	0,07530	110,0
5,5	7,5	160MB-8	720	12,22	53,10	4,3	72,95	145,90	2,0	145,90	2,0	86,6	87,3	85,0	0,750	0,710	0,610	75	68	0,09310	120,0
7,5	10	160L-8	720	16,33	70,97	4,3	99,48	198,96	2,0	198,96	2,0	87,2	88,1	85,0	0,760	0,740	0,720	75	68	0,12600	135,0
11	15	180L-8	730	23,48	129,17	5,5	143,90	287,81	2,0	287,81	2,0	87,8	87,9	87,5	0,770	0,700	0,650	80	70	0,20300	160,0
15	20	200L-8	730	31,03	204,78	6,6	196,23	392,47	2,0	392,47	2,0	89,5	89,4	87,8	0,780	0,709	0,580	75	73	0,33900	235,0
18,5	25	225S-8	730	38,48	253,99	6,6	242,02	459,84	1,9	484,04	2,0	91,3	91,5	90,5	0,760	0,720	0,680	80	73	0,49100	242,0
22	30	225M-8	730	44,84	295,97	6,6	287,81	546,84	1,9	575,62	2,0	91,3	91,6	90,6	0,776	0,727	0,608	70	73	0,54700	285,0
30	40	250M-8	730	59,32	391,51	6,6	392,47	745,68	1,9	784,93	2,0	92,4	92,3	91,0	0,790	0,760	0,720	80	75	0,84300	390,0
37	50	280S-8	730	74,02	488,53	6,6	484,04	919,68	1,9	968,08	2,0	92,5	92,4	91,0	0,780	0,730	0,670	80	76	1,93000	500,0
45	60	280M-8	740	89,93	593,51	6,6	580,74	1045,34	1,8	1161,49	2,0	92,6	92,6	89,7	0,780	0,730	0,680	80	76	1,65000	580,0
55	75	315S-8	740	104,10	687,05	6,6	709,80	1277,64	1,8	1419,59	2,0	93,0	93,0	92,0	0,820	0,760	0,650	80	82	4,79000	790,0
75	100	315M-8	740	142,91	943,23	6,6	967,91	1742,23	1,8	1935,81	2,0	93,4	92,8	91,1	0,811	0,744	0,614	70	82	5,58000	970,0
90	125	315LA-8	740	168,57	1112,56	6,6	1161,49	2090,68	1,8	2322,97	2,0	93,8	93,3	91,6	0,822	0,769	0,641	75	82	6,37000	1055,0
110	150	315LB-8	740	205,82	1317,24	6,4	1419,59	2555,27	1,8	2839,19	2,0	94,4	94,1	92,7	0,817	0,754	0,629	80	82	7,23000	1118,0
132	180	355MA-8	740	247,97	1587,01	6,4	1703,51	3066,32	1,8	3407,03	2,0	93,7	93,7	93,1	0,820	0,820	0,760	80	82	7,60000	2000,0
160	220	355MB-8	740	298,97	1913,44	6,4	2064,86	3716,76	1,8	4129,73	2,0	94,2	94,2	93,5	0,820	0,820	0,760	80	82	7,70000	2150,0
200	270	355L-8	740	368,04	2355,48	6,4	2581,08	4645,95	1,8	5162,16	2,0	94,5	94,5	93,0	0,830	0,830	0,790	80	82	8,20000	2250,0
250	335	355LB-8	740	467,15	2989,75	6,4	3226,35	5807,43	1,8	6452,70	2,0	94,2	94,2	93,1	0,820	0,820	0,780	80	82	8,30000	2350,0

To get the data double polarity motors, contact our export office.

KW	HP	Type	rpm	In (A)	Is (A)	Is/In	Cn (Nm)	Cs (Nm)	Cs/Cn	Cmax (Nm)	Cmax/Cn	η % 100%	η % IE	η % 75%	η % 50%	min IE3	Pwr. fact. cosφ 100%	Pwr. fact. cosφ 75%	Pwr. fact. cosφ 50%	ΔT (°C)	LwA (dB)	J Kgm²	Kg
0,75	1	80A-2	2892	1,74	11,84	6,8	2,48	8,60	3,5	9,18	3,7	80,9	IE3	79,6	76,4	80,7	0,770	0,700	0,566	35	65	0,00080	17,0
1,1	1,5	80B-2	2885	2,26	16,74	7,4	3,64	10,90	3,0	12,74	3,5	84,5	IE3	84,7	82,8	82,7	0,830	0,770	0,652	41	65	0,00090	18,0
1,5	2	90S-2	2894	3,22	23,78	7,4	4,95	20,10	4,1	18,78	3,8	85,3	IE3	85,2	83,7	84,2	0,788	0,710	0,588	37	71	0,00120	23,0
2,2	3	90L-2	2891	4,58	35,20	7,7	7,27	30,30	4,2	30,83	4,2	86,2	IE3	86,4	84,7	85,9	0,810	0,710	0,610	43	71	0,00140	26,0
3	4	100L-2	2898	5,80	44,87	7,7	9,89	30,80	3,1	35,98	3,6	87,1	IE3	87,7	86,8	87,1	0,857	0,807	0,692	51	75	0,00300	35,0
4	5,5	112M-2	2894	7,48	59,55	7,0	13,20	33,05	2,8	37,02	3,5	89,6	IE3	90,5	90,2	88,1	0,862	0,810	0,719	52	77	0,00570	43,0
5,5	7,5	132SA-2	2940	10,14	70,59	7,0	17,87	37,70	2,1	35,79	2,0	91,0	IE3	89,7	87,4	89,2	0,860	0,840	0,761	48	78	0,01190	66,0
7,5	10	132SB-2	2925	13,35	95,00	7,1	24,49	53,50	2,2	78,50	3,2	91,6	IE3	92,4	92,9	90,1	0,885	0,850	0,760	60	78	0,01470	73,0
11	15	160MA-2	2937	19,72	123,05	6,2	35,77	73,32	2,1	100,15	2,8	91,4	IE3	91,2	89,7	91,2	0,881	0,864	0,812	49	81	0,03845	112,2
15	20	160MB-2	2938	26,29	150,23	5,7	48,76	95,08	2,0	121,89	2,5	92,0	IE3	92,6	91,8	91,9	0,895	0,877	0,841	61	81	0,05090	122,4
18,5	25	160L-2	2942	32,15	192,92	6,0	60,05	124,31	2,1	179,00	2,1	93,0	IE3	93,7	93,0	92,4	0,893	0,875	0,827	58	81	0,05610	137,7
22	30	180M-2	2950	37,53	304,03	8,1	71,22	163,81	2,3	220,80	3,1	94,0	IE3	93,9	93,0	92,7	0,900	0,880	0,870	41	83	0,07650	168,3
30	40	200LA-2	2940	51,51	386,34	7,5	97,45	224,13	2,3	223,37	2,3	93,4	IE3	93,1	91,6	93,3	0,900	0,881	0,820	65	84	0,12648	221,3
37	50	200LB-2	2960	63,26	474,46	7,5	119,38	274,56	2,3	275,49	2,3	93,8	IE3	93,7	92,2	93,7	0,900	0,887	0,840	65	84	0,14178	247,9
45	60	225M-2	2960	76,69	582,87	7,6	145,19	333,93	2,3	332,80	2,3	94,1	IE3	93,6	92,2	94,0	0,900	0,878	0,816	65	86	0,23766	326,4
55	75	250M-2	2970	94,39	707,92	7,5	176,85	406,76	2,3	406,76	2,3	94,5	IE3	94,0	92,3	94,3	0,890	0,872	0,825	65	89	0,31824	397,8
75	100	280S-2	2970	127,01	876,39	6,9	241,16	530,56	2,2	554,67	2,3	94,7	IE3	94,5	93,5	94,7	0,900	0,896	0,875	55	91	0,59058	550,8
90	125	280M-2	2970	151,93	1078,73	7,1	289,39	636,67	2,2	665,61	2,3	95,0	IE3	94,6	93,2	95,0	0,900	0,894	0,857	65	91	0,68850	601,8

KW	HP	Type	rpm	In (A)	Is (A)	Is/In	Cn (Nm)	Cs (Nm)	Cs/Cn	Cmax (Nm)	Cmax/Cn	η % 100%	η % IE	η % 75%	η % 50%	min IE3	Pwr. fact. cosφ 100%	Pwr. fact. cosφ 75%	Pwr. fact. cosφ 50%	ΔT (°C)	LwA (dB)	J Kgm²	Kg
0,75	1	80B-4	1430	1,87	11,24	6,0	5,01	16,90	3,4	12,80	2,6	82,9	IE3	82,6	79,2	82,5	0,700	0,600	0,451	38	56	0,00190	18,0
1,1	1,5	90S-4	1431	2,54	15,83	6,2	7,34	25,60	3,5	24,50	3,3	84,8	IE3	86,2	85,5	84,1	0,738	0,660	0,516	44	61	0,00240	25,0
1,5	2	90L-4	1438	3,38	19,62	5,8	9,96	32,11	3,2	34,90	3,5	85,9	IE3	86,3	85,1	85,3	0,747	0,658	0,569	47	61	0,00280	30,0
2,2	3	100LA-4	1425	4,35	34,15	7,8	14,74	41,27	2,8	41,27	2,8	86,7	IE3	86,9	86,0	86,7	0,841	0,782	0,700	53	64	0,00550	36,0
3	4	100LB-4	1450	6,07	46,83	7,7	19,76	54,30	2,7	56,31	2,8	89,0	IE3	89,3	88,0	87,7	0,801	0,720	0,700	57	64	0,00690	40,0
4	5,5	112M-4	1442	7,95	54,51	6,9	26,49	74,03	2,9	74,22	3,3	89,1	IE3	90,3	90,5	88,6	0,815	0,760	0,641	53	65	0,01000	46,0
5,5	7,5	132S-4	1454	10,64	68,01	6,4	36,12	75,86	2,1	101,15	2,8	89,9	IE3	92,1	92,4	89,6	0,830	0,770	0,675	61	71	0,02200	70,0
7,5	10	132M-4	1460	14,39	94,37	6,6	49,06	91,80	1,9	132,46	2,7	90,5	IE3	90,8	89,9	90,4	0,831	0,790	0,699	46	71	0,02820	81,0
11	15	160M-4	1468	20,76	121,31	5,8	71,56	121,50	1,7	193,21	2,7	91,8	IE3	91,7	90,4	91,4	0,833	0,790	0,675	52	73	0,06222	122,7
15	20	160L-4	1460	28,19	140,97	5,0	98,12	166,60	1,7	255,10	2,6	92,3	IE3	93,1	92,3	92,3	0,832	0,780	0,680	61	75	0,05202	137,3
18,5	25	180M-4	1481	33,77	215,02	6,4	119,29	220,90	1,9	334,30	2,8	92,6	IE3	92,3	89,6	92,6	0,854	0,835	0,748	60	76	0,09551	170,6
22	30	180L-4	1470	39,62	297,13	7,5	142,93	314,44	2,2	328,73	2,3	93,2	IE3	91,7	91,0	93,0	0,860	0,832	0,761	80	76	0,14462	189,3
30	40	200L-4	1480	53,48	385,07	7,2	193,58	425,88	2,2	445,24	2,3	93,6	IE3	93,8	92,8	93,6	0,865	0,818	0,767	80	79	0,16438	254,8
37	50	225S-4	1480	65,37	470,68	7,2	238,75	525,25	2,2	549,13	2,3	93,9	IE3	92,7	92,0	93,9	0,870	0,839	0,776	75	81	0,27258	268,3
45	60	225M-4	1480	77,39	557,21	7,2	290,37	638,82	2,2	667,85	2,3	94,3	IE3	93,3	92,8	94,2	0,890	0,872	0,807	80	81	0,42240	301,6
55	75	250M-4	1480	93,89	676,02	7,2	354,90	780,78	2,2	816,27	2,3	95,0	IE3	94,2	93,5	94,6	0,890	0,862	0,800	75	83	0,48795	403,5
75	100	280S-4	1480	127,90	920,88	7,2	483,95	1064,70	2,2	1113,09	2,3	95,1	IE3	93,5	91,0	95,0	0,890	0,863	0,843	70	86	0,68666	530,4
90	120	280M-4	1485	155,06	1116,44	7,2	578,79	1273,33	2,2	1331,21	2,3	95,2	IE3	93,5	92,0	95,2	0,880	0,872	0,838	65	86	1,16525	630,2

KW	HP	Type	rpm	In (A)	Is (A)	Is / In	Cn (Nm)	Cs (Nm)	Cs / Cn	Cmax (Nm)	Cmax / Cn	η % 100%	η % IE	η % 75%	η % 50%	min IE3	Pwr. fact. cosφ 100%	Pwr. fact. cosφ 75%	Pwr. fact. cosφ 50%	ΔT (°C)	LwA (dB)	J Kgm²	Kg
0,75	1	90S-6	941	1,96	8,60	4,4	7,61	18,20	2,4	19,03	2,5	79,1	IE3	79,2	75,9	78,9	0,699	0,570	0,482	40	55	0,00300	23,0
1,1	1,5	90L-6	936	2,86	12,10	4,2	11,22	27,40	2,4	29,18	2,6	81,1	IE3	81,2	77,7	81,0	0,685	0,570	0,438	53	55	0,00360	26,0
1,5	2	100L-6	949	3,53	17,03	4,8	15,09	32,90	2,2	37,74	2,5	83,0	IE3	83,8	82,4	82,5	0,738	0,650	0,526	52	60	0,00850	35,0
2,2	3	112M-6	955	5,28	25,56	4,8	22,00	47,60	2,2	57,20	2,6	84,8	IE3	85,6	84,3	84,3	0,709	0,630	0,498	59	62	0,01600	44,0
3	4	132S-6	971	6,99	38,51	5,5	29,51	58,10	2,0	76,71	2,6	87,6	IE3	88,0	86,7	85,6	0,707	0,611	0,511	39	68	0,02930	67,0
4	5,5	132MA-6	974	9,34	58,39	6,3	39,22	90,90	2,3	125,50	3,2	88,2	IE3	88,0	86,1	86,8	0,701	0,610	0,484	51	68	0,03720	75,0
5,5	7,5	132MB-6	972	12,46	72,99	5,9	54,04	124,90	2,3	156,71	2,9	90,0	IE3	90,1	89,2	88,0	0,708	0,606	0,492	63	69	0,04780	86,0



IE3 motors can be distinguished by the colour of their terminal box cap and the plate data

The technical files with all performance data and PDF drawings of each motor, can be downloaded from ww.motive.it “datasheet creator” section



NOTE: motors can be improved in any moment. The data in www.motive.it can be more updated.
Each data is even more detailed and proven by the type test reports loaded in www.motive.it

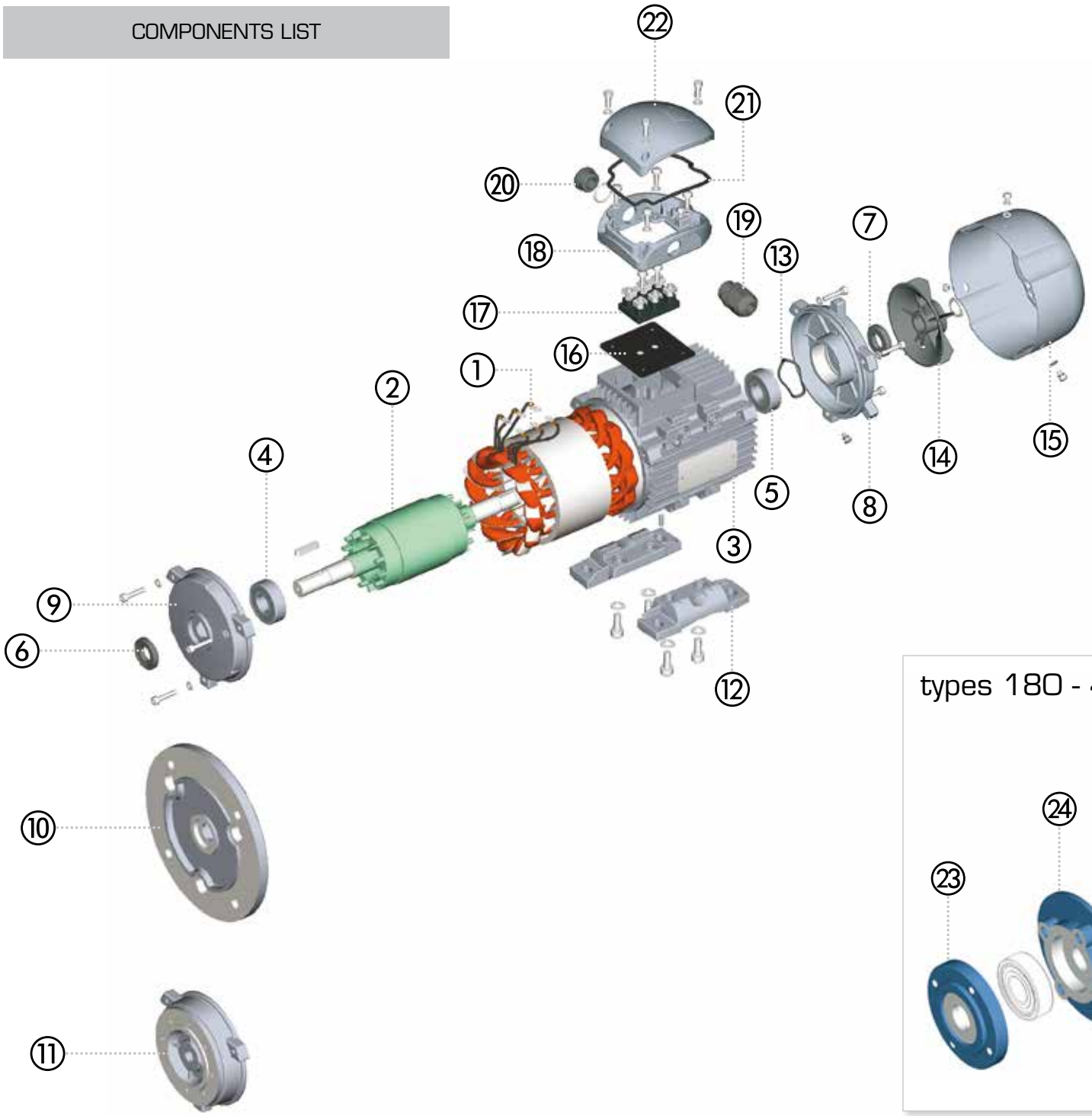

N°	CODE
1	3PNSTA
2	3PNROT
3	3PNFRA
4	3PNFBE
5	3PNBBE
6	3PNFOS
7	3PNBOS
8	3PNBSH
9	3PNBO3
10	3PNBO5
11	3PNB14
12	3PNFEE
13	3PNWAV

N°	CODE
14	3PNFAN
15	3PNFCV
16	3PNUCB
17	3PNTER
18	3PNBCB
19	3PNCMP
20	3PNCAP
21	3PNSCB
22	3PNCCB
23	3PNFOB
24	3PNFIB
25	3PNBIB
26	3PNBOB

types 180 - 400

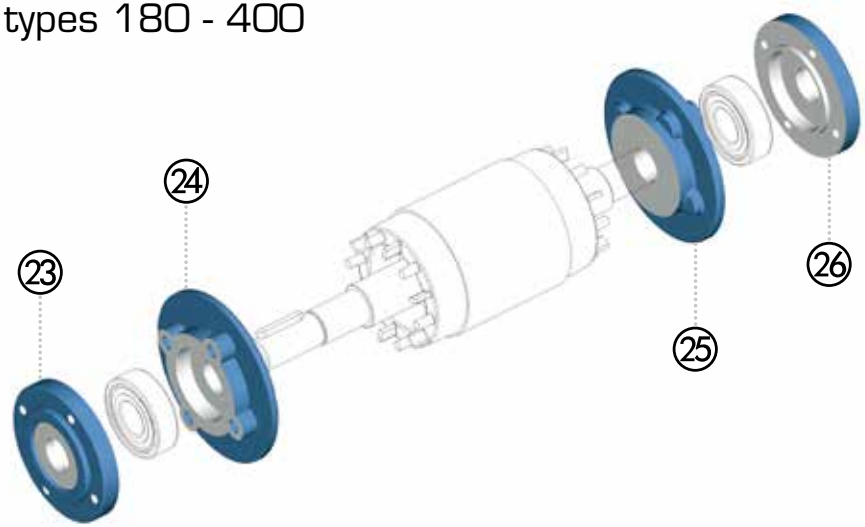

RUBBER SEAL RINGS AND BEARINGS

FRAME SIZE	POLES NUMBER	RUBBER SEAL RING ⑥	RUBBER SEAL RING ⑦	BEARINGS ④	BEARINGS ⑤
56	2 – 8	12x25x7	12x25x7	6201 ZZ-C3	6201 ZZ-C3
63	2 – 8	12x25x7	12x25x7	6201 ZZ-C3	6201 ZZ-C3
71	2 – 8	15x30x7	15x26x7	6202 ZZ-C3	6202 ZZ-C3
80	2 – 8	20x35x7	20x35x7	6204 ZZ-C3	6204 ZZ-C3
90	2 – 8	25x40x7	25x40x7	6205 ZZ-C3	6205 ZZ-C3
100	2 – 8	30x47x7	30x47x7	6206 ZZ-C3	6206 ZZ-C3
112	2 – 8	30x47x7	30x47x7	6206 ZZ-C3	6206 ZZ-C3
132	2 – 8	40x62x8	40x62x8	6208 ZZ-C3	6208 ZZ-C3
160	2 – 8	45x62x8	45x62x8	6309 ZZ-C3	6309 ZZ-C3
180	2 – 8	55x72x8	55x72x8	6311-C3	6311-C3
200	2 – 8	60x80x8	60x80x8	6312-C3	6312-C3
225	2 – 8	65x80x10	65x80x10	6313-C3	6313-C3
250	2 – 8	70x90x10	70x90x10	6314-C3	6314-C3
280	2	70x90x10	70x90x10	6314-C3	6314-C3
280	4 – 8	85x100x12	85x100x12	6317-C3	6317-C3
315	2	85x110x12	85x110x12	6317-C3	6317-C3
315	4 – 8	95x120x12	95x120x12	NU 319-C3	6319-C3
355	2	95x120x12	95x120x12	6319-C3	6319-C3
355	4 – 8	110x130x12	110x130x12	NU 322-C3	6322-C3
400	4 – 8	130X160X12	130X160X12	NU 326-C3	6326-C3

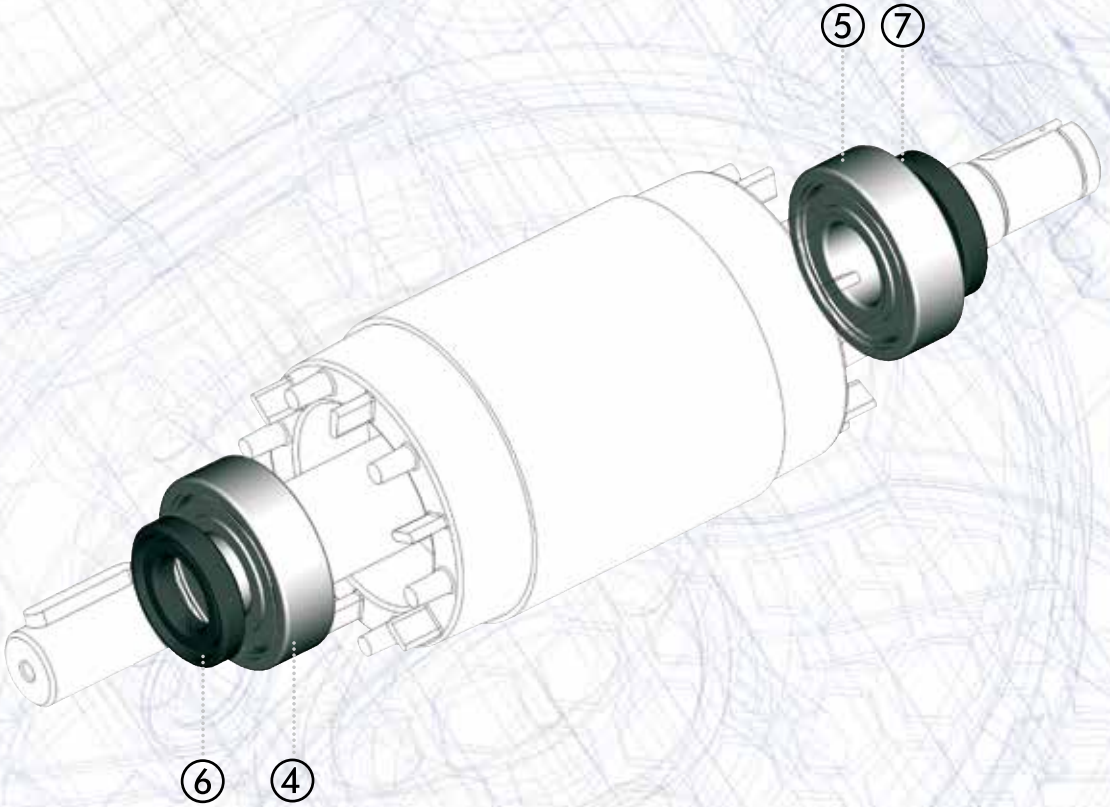

2 bearings lubrication devices on the front and the back shield are provided in motors from size 180 and up.
Other motors mount staunch bearings pre-lubricated for life.
Motors 180-400 are already supplied with lithium grease.

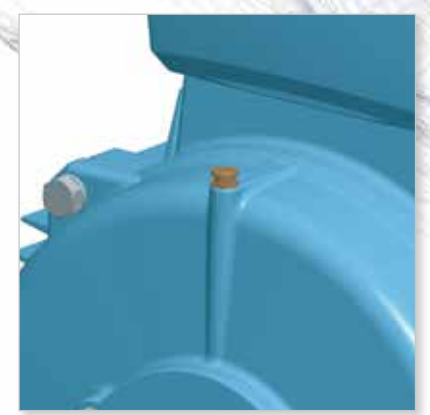

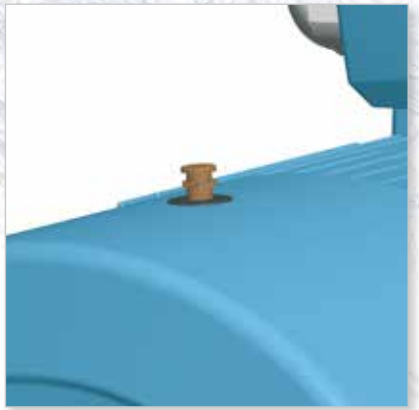

"bearing lubrication devices" are an optional on motors size 56-160.



TERMS OF SALE AND GUARANTEE

ARTICLE 1
GARANTEE

1.1. Barring written agreements, entered into between the parties hereto each time, Motive hereby guarantees compliance of products supplied and compliance with specific agreements. The guarantee for defects shall be restricted to product defects following design, materials or manufacturing defects leading back to Motive.

The Guarantee shall not include:

- faults or damages ensuing from transport., faults or damages ensuing from installation defects; incompetent use of the product, or any other unsuitable use.
- tampering or damages ensuing from use by non - authorised staff and/or use of non - original parts and/or spare parts;
- Defects and/or damages ensuing from chemical agents and/or atmospheric phenomena (e.g. burnt out material, etc.);routine maintenance and required action or checks;
- Products lacking a plate or having a tampered plate.

1.2. Returns to credit or replace will be accepted only in exceptional cases; However returns of goods already used to credit or replace won't be accepted in any case. The guarantee shall be effective for all Motive products, with a term of validity of 12 months, starting from the date of shipment. The guarantee shall be subject to specific written request for Motive to take action,according to statements, as described at the paragraphs hereinbelow. By virtue of aforesaid approval, and as regards the claim, Motive shall be bound, at its discretion, and within a reasonable time-limit,to alternatively take the following action:

a) To supply the Buyer with products of the same type and quality as those having proven defective and not complying with agreements, free ex-works; in aforesaid case, Motive shall have the right to request, at the Buyer's charge, early return of defective goods, which shall become Motive's property;

b) To repair, at its charge, the defective product or to modify the product which does not comply with agreements, by performing aforesaid action at its facilities; in aforesaid cases, all costs regarding product transport shall be sustained by the Buyer.

c) To send spare parts free of charge: all costs regarding product transport shall be sustained by the Buyer.

1.3 The guarantee herein shall assimilate and replace legal guarantees for defects and discrepancies, and shall exclude any other eventual Motive liability, however caused by supplied products; in particular, the Buyer shall have no right to submit any further claims. Motive shall not be liable for the enforcement of any further claims, as of the date the guarantee's term of validity expires.

ARTICLE 2
CLAIMS

2.1. Without prejudice to the application of provisions in Law, dated June 21, 1971, and as per Article 1:
Claims, regarding quantity, weight, gross weight and colour, or claims regarding faults and defects in quality or compliance, and which the Buyer may discover on goods delivery, shall be submitted by a max. 7 days of aforesaid discovery, under penalty of nullity.

ARTICLE 3
DELIVERY

3.1. Any liability for damages ensuing from total or partial delayed or failed delivery, shall be excluded.

3.2. Unless differently communicated by written to the Client, the transport terms have to be intended ex-works

ARTICLE 4
PAYMENT

4.1. Any delayed or irregular payments shall entitle Motive to cancel ongoing agreements, including agreements which do not regard the payments at issue, as well as entitling Motive to claim damages, if any. Motive shall, however, have the right, as of the payment's due date and without placing in arrears, to claim interest for arrears, to the extent of the discount rate in force in Italy, increased by 5 points. Motive shall also have the right to withhold material under repair for replacement. In the case of failed payment, Motive shall have the right to cancel all guarantees on materials, as regards the insolvent Client.

4.2. The Buyer shall be bound to complete payment, including cases whereby claims or disputes are underway.

DOWNLOAD THE TECHNICAL MANUAL FROM WWW.MOTIVE.IT

ALL DATA HAVE BEEN WRITTEN AND CHECKED WITH THE GREATEST CARE. WE DO NOT TAKE ANY RESPONSIBILITY FOR POSSIBLE ERRORS OR OMISSIONS. MOTIVE CAN CHANGE THE CHARACTERISTICS OF THE SOLD ITEMS ON HIS FIRM OPINION AND IN EVERY MOMENT.

You can download each motor or gearbox final test report from www.motive.it, starting from its serial number







final test report

motive

General characteristics

Type	63C-2	kW	0.37
Serial Number	1203DF3437		
Tested	400V 50Hz		

Final test results

Earth	56.26 mΩ		
Winding resistance	R1 38.42 Ω	R2 38.39 Ω	R3 38.32 Ω
Dieletric strength	2.86 mA	2.4 kV	
Insulation resistance	1000 MΩ		
No load dynamic test			
Tension	389 V	389 V	389 V
Current	0.7 A	0.7 A	0.7 A
Power	0.09 kW		

Made by ENRICO SANDRO GIORGIO

Tested by ALEX



ASK OUR FURTHER CATALOGUES:





LOOKS GOOD, PERFORMS BETTER

TECHNICAL CATALOGUE DELPHI SERIES OTT 13 REV.09

AREA DISTRIBUTOR

Motive s.r.l.
Via Le Ghiselle, 20
25014 Castenedolo (BS) - Italy
Tel.: +39.030.2677087 - Fax: +39.030.2677125
web site: www.motive.it
e-mail: motive@e-motive.it